United States Patent [19]

Endres

[11] **3,741,213**

[45] **June 26, 1973**

[54] **PREFOLDED DISPOSABLE DIAPER**

[75] Inventor: **Dan D. Endres**, Memphis, Tenn.

[73] Assignee: **Kimberley-Clark Corporation**, Neenah, Wis.

[22] Filed: **Jan. 3, 1972**

[21] Appl. No.: **214,824**

[52] **U.S. Cl.** **128/287**

[51] **Int. Cl.** **A61f 13/16**

[58] **Field of Search** 128/284, 287, 290, 128/296

[56] **References Cited**

UNITED STATES PATENTS

2,788,786	4/1957	Dexter	128/284
3,196,874	7/1965	Hrubecky	128/287
3,626,944	12/1971	Schaar	128/287
3,650,273	3/1972	Schaar	128/287

Primary Examiner—Charles F. Rosenbaum

Attorney—Daniel J. Hanlon, Jr., Raymond J. Miller et al.

[57] **ABSTRACT**

A disposable diaper of rectangular configuration is transversely folded on itself. Portions of the surfaces which contact each other, when the diaper is in folded condition, are joined together near each edge in an area spaced a predetermined distance away from the transverse foldline.

12 Claims, 5 Drawing Figures

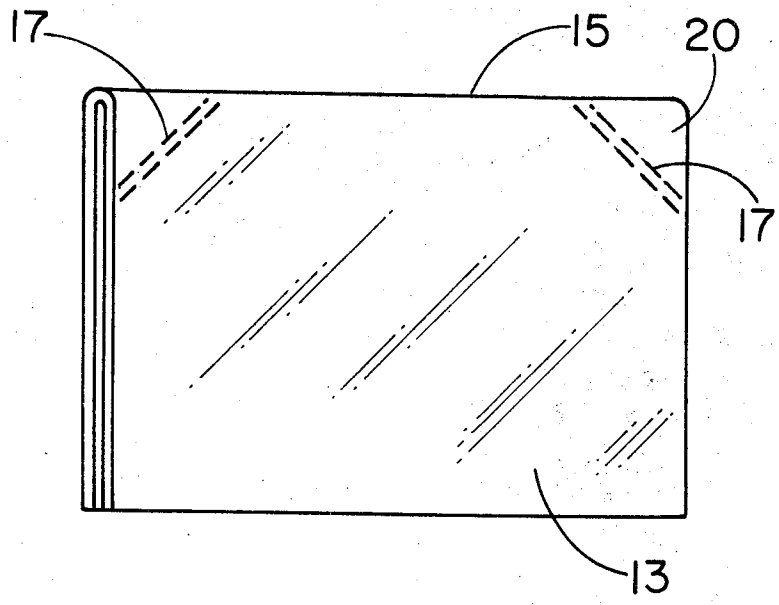

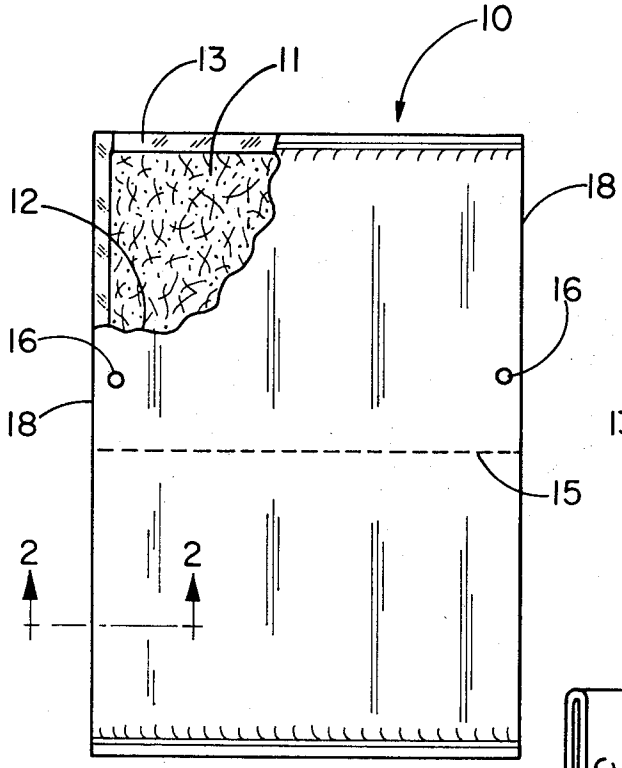

FIG. 1

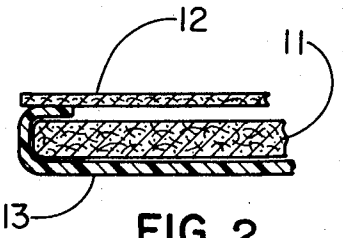

FIG. 2

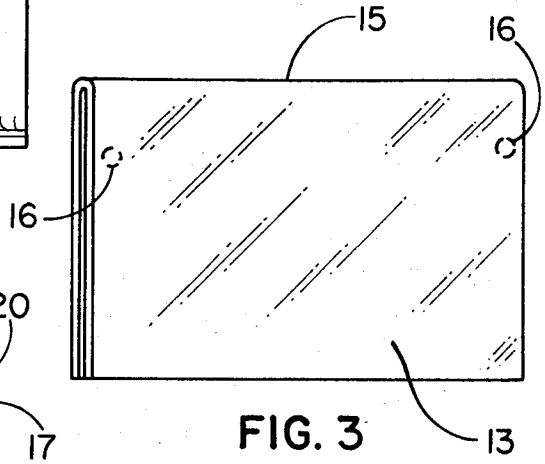

FIG. 3

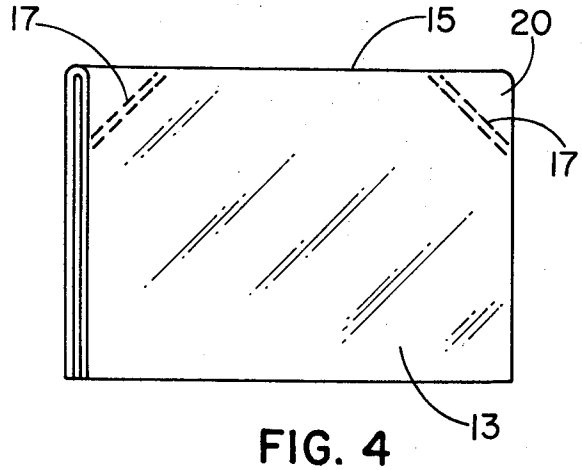

FIG. 4

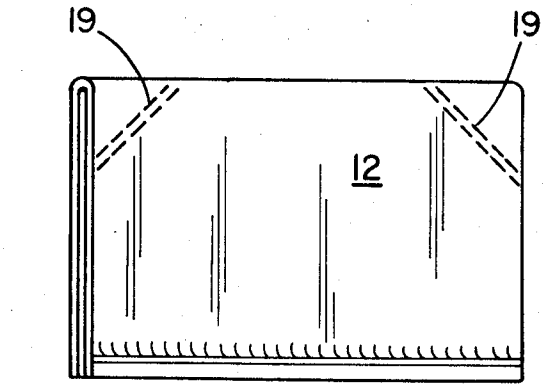

FIG. 5

PREFOLDED DISPOSABLE DIAPER

BACKGROUND OF THE INVENTION

Disposable diapers in many shapes and form are beginning to appear in the market place. Of these diapers, those which are folded in a manner to provide a contoured fit are preferred. However, many of these folds are difficult to fabricate into the diaper when mass produced and therefore add considerably to the expense of production and to the eventual cost to the user. The present invention is directed to a simple fold which, while not providing as sophisticated and satisfactory a fit as the more complicated folds, is still considered to be functionally advantageous over the unfolded form of rectangular diaper.

SUMMARY OF THE INVENTION

In this invention, a rectangular diaper of the conventional disposable construction has joining means comprising an adhesive spot or line applied near to each edge of one of its surfaces and at points spaced away from the transverse midline of the diaper. When the diaper is then folded on itself at its transverse medial line, the surface areas where the adhesive is applied are permanently joined together. When the diaper is ready for application to the child by the user, the adhesively joined areas preserve the transverse fold and provide a trough in the unfolded diaper which extends from the center of the diaper to each side, ending just short of where the child's legs contact the edges of the diaper when the diaper is in place. In forming the diaper it may be folded in half transversely in either direction, i.e. with the pervious cover sheet on the inside, or the impervious backing sheet on the inside. When the diaper is folded with the pervious cover on the inside and the cover sheet joined to itself near the edges, the user merely grasps the diaper ends to unfold and apply the diaper to the child. When the diaper is folded with the impervious backing portions on the inside and the backing sheet joined to itself near the edges, the user must first evert the transverse fold in order to reorient the location of the backing sheet to the outside of the diaper structure before applying it to the child. In each instance, the joining together of the edge areas of the facing surfaces in the transversely folded diaper preserves the above-described trough-like configuration.

BRIEF DESCRIPTION OF THE DRAWINGS

FIG. 1 is a plan view of a rectangular disposable diaper of this invention with a corner portion cut away to show a conventional interior construction.

FIG. 2 is a section taken on line 2—2 of FIG. 1.

FIG. 3 is a plan view of the FIG. 1 diaper after transverse folding with one half of the pervious cover sheet in face to face alignment with the other half of the cover sheet and joined near each edge by spot attachment.

FIG. 4 is a plan view of another embodiment of the folded diaper in which the joining means are shown as diagonal lines of attachment disposed at each end of the fold.

FIG. 5 is a plan view of a diaper after transverse folding in the direction reverse to that of FIGS. 3 and 4 with one half of the backing sheet joined face to face with the other half of the backing sheet by diagonal lines disposed at each end of the fold.

DESCRIPTION OF THE PREFERRED EMBODIMENTS

FIG. 1 is a plan view, with a corner portion cut away, of a rectangular disposable diaper. As shown, the diaper is of generally conventional construction comprising an absorbent pad **11**, a fluid permeable cover or facing sheet **12**, and a fluid impervious bottom or backing sheet **13** of flexible plastic film or the like.

FIG. 2 illustrates in partial section the internal construction in which the impervious backing film **13** is wrapped around the edges of pad **11** and sealed to pervious facing sheet **12** at the edges thereof.

All of the above are known prior art elements in disposable diapers and the present invention does not reside in this generally old structure. Other variations of the basic diaper structure may therefore be used in carrying out the following teachings. The novel concept in this invention is the provision of a suitable means to join predetermined areas of the juxtaposed surfaces to each other near each edge. One such means is indicated at **16**, where a pair of adhesive spots are disposed on the facing sheet of the folded diaper a short distance away from transverse fold line **15**. The spots are also preferably spaced a short distance from each of the respective diaper edges **18**. After the adhesive is applied, the diaper is folded in half transversely as shown in FIG. **3**. The adhesive spots **16** then serve to permanently attach selected edge areas of the juxtaposed portions of facing sheet **12** in face to face contact. Thus when a user grasps the ends of the diaper in order to open it and fit it onto the child, the diaper will unfold only as far as the adhesively joined area. The attachment means therefore keeps the diaper from unfolding completely and thus retains a transverse trough at the transverse fold line with the ends of the trough disposed adjacent the leg contacting area when applied to the child. This trough serves not only to help entrap excrement but also spaces the bottom portion of the diaper away from the child's skin, at least when the child is in an upright or crawling posture, which adds somewhat to wearing comfort.

In order to provide a firmer bond, sufficient adhesive may be applied to penetrate the pervious cover whereby the absorbent pad in that area also becomes a unitary part of, and reinforces, the joint.

In FIG. **4**, the joining means for the juxtaposed portions of the facing sheet is shown as diagonal lines of attachment **17**. This modified arrangement of the joining means not only forms a trough as in the FIG. **3** embodiment but also serves to seal off the end portions of the diaper from fold **15** to the respective diaper edge at each end of the trough, in contrast to the open-ended trough provided by the adhesive spot arrangement shown in FIG. **3**, and is thus the preferred embodiment. When the diagonal joining means of the FIG. **4** embodiment is used, sealed off corner portions **20** may be cut away after the joined area defined by lines **17** is adhered and set, thus giving the diaper a finished and more tailored appearance. Excising these corner areas also reduces bulk in the leg area and provides a more comfortable fit.

It will be seen that the joining means at the diaper edges should preferably be spaced some distance away from fold line **15** in order to provide a trough of suitable depth. It is also preferred that the joining means

be spaced, at least near the fold line, slightly inward from the diaper edges **18**.

In FIG. **5**, the diaper is reverse folded in half with half portions of the impervious film backing aligned and juxtaposed in face-to-face contact. The joining means, shown as diagonal lines of attachment **19**, fastens the indicated portions of the backing together. In this embodiment, when thermoplastic film is used for the backing, attachment may also be achieved by heat sealing the film in a suitable area if desired. It will also be seen that in this reverse fold construction, with the backing sheet disposed on the inside of the folded diaper, the user is required to first evert the diaper at the fold line to turn the impervious diaper backing to the outside, before applying the diaper to the child. Accordingly, because this extra maneuver is needed by the mother, the reverse fold construction is not the preferred version, even though it does provide a functional trough as indicated earlier.

It is also preferred that the adhesive or fastening means which joins the facing sheet portions together be disposed at a point spaced from the fold a distance comprising about 25 percent of the dimension defined by the length of the side edge measured from the fold line to the ends of the folded diaper. The spacing of the joined portion from the fold may be as little as 10 percent of that dimension and still be functional. When a spot is used it should also be spaced slightly inward from its respective edge. When a diagonal fastening means is used to join the facing sheet portions as in FIGS. **4** and **5**, the 10–25 percent of the distance is measured from that end of the line which terminates at the respective edge of the diaper.

What is claimed is:

1. In a disposable diaper of substantially rectangular structure and comprising an absorbent pad, a fluid permeable facing sheet and a fluid impervious backing sheet, the improvement wherein said diaper is folded in half on itself transversely with the folded half portions of one of said sheets in face to face contact, selected areas of said contacting face portions being joined together adjacent each edge of the folded diaper, said selected areas being spaced away from the transverse fold a distance comprising between about 10 and about 25 percent of the dimension defined by the length of the side edge of the diaper measured from the fold to the ends of the folded diaper.

2. The diaper of claim **1** in which said selected areas are joined together by means of adhesive spots.

3. The diaper of claim **1** wherein said selected areas are joined together by means of a pair of diagonal adhesive lines, each of said lines extending from a point on said fold spaced inwardly from the respective edge of said fold and terminating at the respective edge of said folded diaper.

4. The diaper of claim **1** wherein said contacting face portions are comprised of said fluid permeable facing sheet.

5. The diaper of claim **1** in which said contacting face portions are comprised of said fluid impervious backing sheet.

6. The diaper of claim **2** wherein said contacting face portions are comprised of said fluid permeable facing sheet and said adhesive spots penetrate said facing sheet and also integrally join said pad and facing sheet in said selected areas.

7. The diaper of claim **3** wherein said contacting face portions are comprised of said fluid permeable facing sheet and said adhesive lines penetrate said facing sheet and also integrally join said pad and facing sheet in said selected areas.

8. The diaper of claim **3** wherein each of the portions of the folded diaper disposed outwardly of each of said diagonal lines are excised.

9. The diaper of claim **5** wherein the impervious backing sheet is thermoplastic film and the joining means in said selected areas comprises heat sealed spots.

10. The diaper of claim **5** wherein the fluid impervious backing sheet is thermoplastic film and the joining means in said selected areas comprises a pair of heat-sealed diagonal lines, each of said lines extending from a point on said fold spaced inwardly from the respective edge of said fold and terminating at the respective edge of said folded diaper.

11. The diaper of claim **7** wherein each of the portions of the folded diaper disposed outwardly of each of said diagonal lines are excised.

12. The diaper of claim **10** wherein each of the portions of the folded diaper disposed outwardly of each of said diagonal lines are excised.

* * * * *