Innovation, Sciences et Développement économique Canada
Office de la Propriété Intellectuelle du Canada

Innovation, Science and Economic Development Canada
Canadian Intellectual Property Office

CA 2868577 C 2021/08/17

(11)(21) 2 868 577

(12) BREVET CANADIEN
CANADIAN PATENT

(13) C

(86) Date de dépôt PCT/PCT Filing Date: 2013/04/25
(87) Date publication PCT/PCT Publication Date: 2013/11/07
(45) Date de délivrance/Issue Date: 2021/08/17
(85) Entrée phase nationale/National Entry: 2014/09/24
(86) N° demande PCT/PCT Application No.: IB 2013/053266
(87) N° publication PCT/PCT Publication No.: 2013/164741
(30) Priorité/Priority: 2012/04/30 (GB1207463.9)

(51) Cl.Int./Int.Cl. *H01L 21/768* (2006.01)

(72) Inventeurs/Inventors:
DUERIG, URS T., CH;
HOLZNER, FELIX, CH;
KNOLL, ARMIN W., CH;
RIESS, WALTER HEINRICH, CH

(73) Propriétaire/Owner:
INTERNATIONAL BUSINESS MACHINES CORPORATION, US

(74) Agent: CHAN, BILL W.K.

(54) Titre : PROCEDES ET APPAREILS POUR LE POSITIONNEMENT DE NANO-OBJETS PRESENTANT DES RAPPORTS DE FORME

(54) Title: METHODS AND APPARATUSES FOR POSITIONING NANO-OBJECTS WITH ASPECT RATIOS

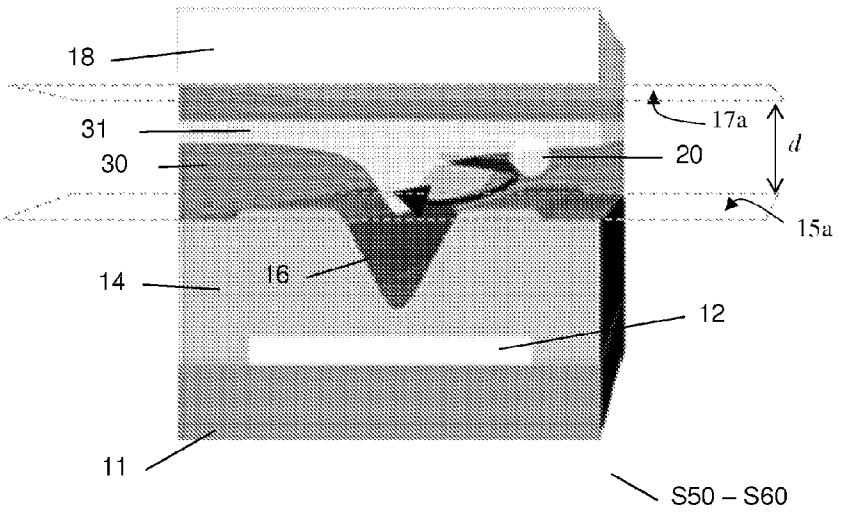

(57) Abrégé/Abstract:
The present invention is notably directed to apparatuses and methods for positioning nano- objects (20) on a surface. The method comprises: providing (S10 - S50) two surfaces (15, 17) including a first surface (15) and a second surface (17) in vis-à-vis, wherein at least one of the two surfaces exhibits one or more positioning structures (16, 16a) having dimensions on the nanoscale; and a ionic liquid suspension (30) of the nano-objects between the two surfaces, wherein each of the surfaces forms an electrical double layer with the ionic liquid suspension, each of the two surfaces having a same electrical charge sign; and letting (S60) nano-objects in the suspension position according to a potential energy (31) resulting from the electrical charge of the two surfaces and depositing (S70) one or more of the nano-objects on the first surface according to the positioning structures, by shifting minima (32) of the potential energy towards the first surface.

(12) INTERNATIONAL APPLICATION PUBLISHED UNDER THE PATENT COOPERATION TREATY (PCT)

(19) World Intellectual Property Organization
International Bureau

(43) International Publication Date
7 November 2013 (07.11.2013)

WIPO | PCT

(10) International Publication Number
WO 2013/164741 A1

(51) International Patent Classification:
H01L 21/768 (2006.01)

(21) International Application Number:
PCT/IB2013/053266

(22) International Filing Date:
25 April 2013 (25.04.2013)

(25) Filing Language: English

(26) Publication Language: English

(30) Priority Data:
1207463.9 30 April 2012 (30.04.2012) GB

(71) Applicant: **INTERNATIONAL BUSINESS MACHINES CORPORATION** [US/US]; New Orchard Road, Armonk, NY 10504 (US).

(71) Applicants *(for MG only)*: **IBM (CHINA) INVESTMENT COMPANY LTD.** [CN/CN]; 25/F, Pangu Plaza, No. 27, Central North 4th Ring Road, Chaoyang District, Beijing 100101 (CN). **IBM RESEARCH GMBH** [CH/CH]; IBM Research - Zurich, Saeumerstrasse 4, CH-8803 Rueschlikon (CH).

(72) Inventors: **DUERIG, Urs T.**; IBM Research GmbH, IBM Research - Zurich, Saeumerstrasse 4, CH-8803 Rueschlikon (CH). **HOLZNER, Felix**; IBM Research GmbH, IBM Research - Zurich, Saeumerstrasse 4, CH-8803 Rueschlikon (CH). **KNOLL, Armin W.**; IBM Research GmbH, IBM Research - Zurich, Saeumerstrasse 4, CH-8803 Rueschlikon (CH). **RIESS, Walter Heinrich**; IBM Research GmbH, IBM Research - Zurich, Saeumerstrasse 4, CH-8803 Rueschlikon (CH).

(74) Agents: **RAGOT, Sébastien** et al.; IBM Research GmbH, IBM Research - Zurich, Intellectual Property Law, Saeumerstrasse 4, CH-8803 Rueschlikon (CH).

(81) Designated States *(unless otherwise indicated, for every kind of national protection available)*: AE, AG, AL, AM, AO, AT, AU, AZ, BA, BB, BG, BH, BN, BR, BW, BY, BZ, CA, CH, CL, CN, CO, CR, CU, CZ, DE, DK, DM, DO, DZ, EC, EE, EG, ES, FI, GB, GD, GE, GH, GM, GT, HN, HR, HU, ID, IL, IN, IS, JP, KE, KG, KM, KN, KP, KR, KZ, LA, LC, LK, LR, LS, LT, LU, LY, MA, MD, ME, MG, MK, MN, MW, MX, MY, MZ, NA, NG, NI, NO, NZ, OM, PA, PE, PG, PH, PL, PT, QA, RO, RS, RU, RW, SC, SD, SE, SG, SK, SL, SM, ST, SV, SY, TH, TJ, TM, TN, TR, TT, TZ, UA, UG, US, UZ, VC, VN, ZA, ZM, ZW.

(84) Designated States *(unless otherwise indicated, for every kind of regional protection available)*: ARIPO (BW, GH, GM, KE, LR, LS, MW, MZ, NA, RW, SD, SL, SZ, TZ, UG, ZM, ZW), Eurasian (AM, AZ, BY, KG, KZ, RU, TJ, TM), European (AL, AT, BE, BG, CH, CY, CZ, DE, DK, EE, ES, FI, FR, GB, GR, HR, HU, IE, IS, IT, LT, LU, LV, MC, MK, MT, NL, NO, PL, PT, RO, RS, SE, SI, SK, SM, TR), OAPI (BF, BJ, CF, CG, CI, CM, GA, GN, GQ, GW, ML, MR, NE, SN, TD, TG).

Published:

— *with international search report (Art. 21(3))*

[Continued on next page]

(54) Title: METHODS AND APPARATUSES FOR POSITIONING NANO-OBJECTS WITH ASPECT RATIOS

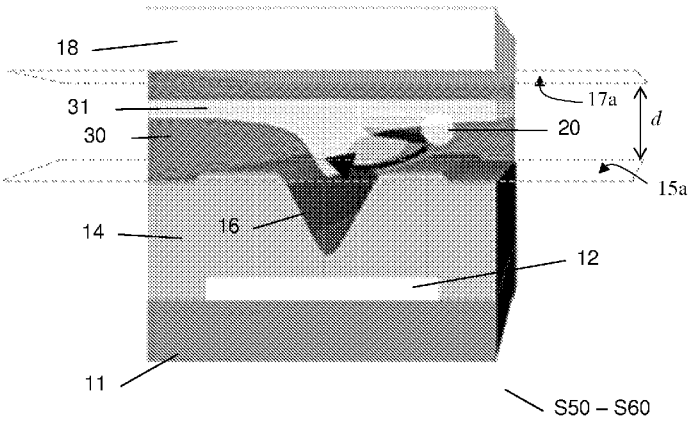

FIG. 3.

(57) Abstract: The present invention is notably directed to apparatuses and methods for positioning nano- objects (20) on a surface. The method comprises: providing (S10 – S50) two surfaces (15, 17) including a first surface (15) and a second surface (17) in vis-à-vis, wherein at least one of the two surfaces exhibits one or more positioning structures (16, 16a) having dimensions on the nano-scale; and a ionic liquid suspension (30) of the nano-objects between the two surfaces, wherein each of the surfaces forms an electrical double layer with the ionic liquid suspension, each of the two surfaces having a same electrical charge sign; and letting (S60) nano-objects in the suspension position according to a potential energy (31) resulting from the electrical charge of the two surfaces and depositing (S70) one or more of the nano-objects on the first surface according to the positioning structures, by shifting minima (32) of the potential energy towards the first surface.

WO 2013/164741 A1

— *before the expiration of the time limit for amending the claims and to be republished in the event of receipt of amendments (Rule 48.2(h))*

METHODS AND APPARATUSES FOR POSITIONING NANO-OBJECTS WITH ASPECT RATIOS

FIELD OF THE INVENTION

The invention relates in general to the field of methods and apparatuses for positioning nano-objects.

BACKGROUND OF THE INVENTION

The controlled synthesis of nano-objects (i.e., nanoscale objects or nanoparticles, sized between 1 and 100 nanometers) in the form of spheres, rods or wires, etc., has led to a variety of applications in a host of scientific research areas. Bottom up synthesis leads to mono-crystalline nanoparticles and enables the fabrication of multi-component structures. Their structural properties often provide unique or superior performance of the particles in comparison to their top down-fabricated counterparts. A wide spectrum of applications e.g. in integrated devices could be available if precise placement and alignment relative to neighboring particles or other functional structures on a substrate would be possible. Ideally, it is desirable to obtain both precise placement and alignment simultaneously at high packing density with placement accuracy on the order of the nanoparticle diameter, typically of 5 – 50 nm, a so far unresolved challenge.

BRIEF SUMMARY OF THE INVENTION

According to a first aspect, the present invention is embodied as a method for positioning nano-objects, on a surface, the method comprising:
providing two surfaces including a first surface and a second surface in vis-à-vis, wherein at least one of the two surfaces exhibits one or more positioning structures having dimensions on the nanoscale; and a ionic liquid suspension of the nano-objects between the two surfaces, the suspension comprising two electrical double layers formed, each, at an interface with a respective one of the two surfaces, the electrical surface charges of the two surfaces being of a same sign; and
letting nano-objects in the suspension position according to a potential energy resulting from the electrical charge of the two surfaces and depositing one or more of the nano-objects on the first surface according to the positioning structures, by shifting minima of the potential energy towards the first surface.

In embodiments, depositing comprises reducing a distance between the surfaces, whereby minima of the potential energy are shifted towards the first surface. The distance is preferably reduced to less than 200 nm, more preferably less than 100 nm.

Advantageously, the two surfaces provided are designed to have an asymmetrical electrical charge, whereby each of the two surfaces exhibits a same electrical charge sign and the second surface has a higher electrical charge than the first surface.

Preferably, nano-objects provided have an aspect ratio, preferably higher than 2:1, more preferably higher than 2:1; the positioning structures provided comprise one or more grooves extending parallel to an average plane of the first surface or an average plane of the second surface; and letting nano-objects position according to the potential energy further comprises letting the nano-objects orient according to the potential energy.

According to embodiments, the first surface provided is the surface of a layer of a removable material provided on a substrate and preferably comprising a polymer such as polyphthalaldehyde.

Preferably, the method further comprises, prior to providing the two surfaces, creating the positioning structures in the layer of the removable material, preferably by a thermal scanning probe lithography technique.

In preferred embodiments, the method further comprises, after depositing the nano-objects, removing the removable material to transfer one or more nano-objects deposited on the first surface to the substrate.

In embodiments, removing the removable material comprises evaporating the removable material, wherein the removable material is preferably a polymer, the polymer being evaporated at a temperature above the ceiling temperature of the polymer.

Preferably, the method further comprises, after removing the removable material, providing a new layer of material on top of the deposited nano-objects and repeating the steps of: providing the two surfaces and the ionic liquid suspension; letting nano-objects position; and depositing, wherein the two surfaces now comprises a surface of the new layer of material as a new first surface.

In embodiments, the method further comprises depositing the removable material onto the substrate, prior to providing the surfaces, and depositing the removable material preferably comprises spin casting a polyphthalaldehyde film onto the substrate.

In variants, depositing the removable material comprises depositing the removable material onto both the substrate and one or more pre-existing structures such as electrodes or pads on the substrate.

Preferably, the method further comprises dragging the suspension of nano-objects, for example a water-based suspension, into and/or from a gap between the two surfaces, the gap being preferably less than 200 nm, and dragging is preferably carried out by way of capillary and/or electrophoretic forces.

According to embodiments, depositing the nano-objects comprises reducing a distance between the surfaces, whereby minima of the potential energy are shifted towards the first surface, and reducing the distance between the surfaces comprises moving the first surface relatively to the second surface, perpendicularly to an average plane of one of the two surfaces, and wherein the second surface preferably comprises one or more of the positioning structures.

Preferably, the second surface provided is tilted with respect to the first surface and depositing the nano-objects comprises reducing a distance between the surfaces, whereby minima of the potential energy are shifted towards the first surface, wherein reducing the distance comprises moving the first surface relatively to the second surface, parallel to an average plane of the first surface.

According to another aspect, the invention is embodied as an apparatus, adapted for implementing the method according to any one of the above embodiments, the apparatus comprising:

two surfaces in vis-à-vis: a first surface and a second surface, wherein at least one of the two surfaces has positioning structures with dimensions on the nanoscale;

a ionic liquid suspension of nano-objects between the two surfaces,

the suspension comprising two electrical double layers formed, each, at an interface with a respective one of the two surfaces, the electrical surface charges of the two surfaces being of a same sign; and

positioning means coupled to the first surface and/or the second surface, the positioning means configured to move the first surface relatively to the second surface, in operation.

Methods and apparatuses embodying the present invention will now be described, by way of non-limiting examples, and in reference to the accompanying drawings.

BRIEF DESCRIPTION OF (SEVERAL VIEWS OF) THE DRAWINGS

- FIGS. 1 – 6 are schematic 3D views, illustrating steps of a method for positioning nano-objects, according to embodiments;

- FIG.7 is a flowchart showing the precise ordering of steps of a nano-object positioning method, according to embodiments;

- FIGS. 8 – 10 are schematic 3D views of examples of nano-object realizations, as obtainable in embodiments;

- FIG.11 is an example of apparatus suitable for implementing methods according to embodiments;

- FIG.12 shows two graphs illustrating: estimated electrostatic potentials between two asymmetrically charged surfaces (top), as involved in embodiments, and a potential barrier as a function of the approach distance (bottom); and

- FIGS. 13 and 14 are schematic 3D views illustrating steps as involved in variants to the method of FIGS. 1 – 6.

The appended drawings are deliberately chosen to be computer-aided designed 3D views, for the sake of clarity of the following description. Experimental images and results are not appended, for conciseness; they will be published in subsequent scientific publications.

DETAILED DESCRIPTION OF THE INVENTION

Present inventors have devised a new methodology, which makes it possible to precisely orient and place (charged) nano-objects at desired positions on a target substrate of choice. Present methods rely only on the charge of the confining surfaces and the liquid, possibly the particles too, which allows for the placement of a wide range of particles ranging from micro-meter long nanowires all the way down to DNA and proteins. More generally, particles can be neutral or charged, dielectric or metal, etc. These methods advantageously apply in particular to high aspect ratio nanoparticles like nanowire, opening up a way to exploit the

functionality of these complex bottom-up derived objects. They can be aligned to existing structures on the substrate enabling device integration. The method works in parallel and high throughput values can be achieved. In addition, the positioning steps can be repeated on top of already assembled items to build up complex three dimensional (or 3D) functional circuits.

The following description is structured as follows. First, general embodiments and high-level variants are described (sect. 1). The next section addresses specific embodiments (sect. 2). Applications are discussed next (sect. 3). A specific example of apparatus is the subject of section 4. Finally, technical implementation details are addressed in section 5.

1. General embodiments and high-level variants

Referring generally to FIGS. 1 – 7, and in particular to FIG. 3, an aspect of the invention is first described, which concerns methods for positioning nano-objects 20 on a surface, at desired positions and possibly with desired directions.

First, use is made of two surfaces 15, 17, i.e., a first surface 15 and a second surface 17 placed in vis-à-vis. At least one of said surfaces, for example surface 15, exhibits positioning structures 16. In variants, the other surface 17 or both surfaces may be provided with such structures. Said positioning structures have dimensions on the nanoscale, i.e., at least one characteristic dimension thereof (e.g., a diameter or principal length) is between 1 and 100 nm.

Second, an ionic liquid suspension 30 of the nano-objects is confined between surfaces 15, 17. The ionic liquid may for example be a water-based suspension, dragged into the gap between the surfaces 15, 17. The gap is preferably less than 200 nm. Dragging the liquid can for instance be carried out by way of capillary and/or electrophoretic forces. In variants, one may squeeze a droplet of liquid between said two surfaces, etc.

Importantly, the surfaces and the liquid are designed such that the suspension comprises two electrical double layers (or EDLs, also called double layer). Each of the EDLs is formed at an interface with a respective surface. Two EDL systems arise because of the two surface-liquid interfaces involved. EDLs are known *per se* and have been the subject of many research papers in the past decades. An EDL appears at the surface of an object (solid object or particle, or even a liquid droplet) when placed in contact with a liquid. A “double layer” refers to two parallel layers of charges next to the object surface. The first layer refers to the surface charge (either positive or negative), that comprises ions adsorbed directly onto the object due to a host of chemical interactions between the surface and the liquid. The second

(diffuse) layer comprises ions, which arise in reaction to the first layer. These ions electrically screen the first layer and are attracted to the surface charge via the coulomb force. Rather than being firmly anchored to the first layer, the second layer is diffuse (and is thus called the diffuse layer): the free ions it comprises move in the liquid under the influence of both the electric attractions and thermal motion. The second layer therefore refers to the liquid.

Thus, surfaces 15, 17 present, each, a surface charge, i.e., the "first" layer of the respective EDL is charged. Importantly too, each of the surfaces exhibits a same electrical charge sign. Preferably, the charge is asymmetric, i.e., the second surface 17 has a higher electrical charge than the first surface 15. As a result, the nano-objects in the suspension are stabilized by charge in suspension (or at least interact therewith, by way of entropic/electric effects) and may thus also be "charged". They shall therefore not deposit on either of the two surfaces. Indeed, the potential energy as experienced by a nano-object in the suspension, which results from the charge of the surfaces, shall typically exceed the thermal energy of this object and thus prevent it to deposit. Note that an uncharged particle shall disturb the cloud of ions responsible for the built-up of the potential. Therefore a dielectric particle also experiences a force due to entropic reasons. Therefore, present methods also work for dielectric particles, as touched earlier.

More in details, the potential energy as experienced by the particles results from the charged surfaces and the reaction of the liquid (containing ions) thereto. This potential essentially controls the nano-objects. The concentration of ions determines the range of the potential, that is, how far it reaches into the liquid. The charge of the nano-objects can be achieved/refined by adding charged surfactants to the ionic solution, which will self-assemble around the particle and provide the charge. The nano-objects i.e., particles can also be chemically modified by attaching charged molecules covalently on the particles surface i.e. thiols on gold or silanes on SiO_x surfaces. The charge of such molecules can for instance be modified by controlling the pH of the water solution, as can be the charge of the surfaces, etc.

Nano-objects in the suspension shall spontaneously position (and possible orient) according to the potential energy resulting from the electrical charge of the surfaces. This potential energy has a non-flat profile, whose shape is notably determined by the positioning structures. An estimated potential energy contour surface 31 is represented in FIGS. 3 – 4. Reference 32 denotes a minimum of the potential energy.

Finally, nano-objects can be deposited on the first surface, and according to the positioning structures, by shifting minima 32 of the potential energy towards the first surface. Namely, a force field is applied which allows the nano-objects to overcome the electrostatic potential

barriers imposed by the first surface (i.e., the lower charge surface). As a result, particles deposit on the first surface, according to positioning structures. Particles adjust their position and orientation before and during deposition.

Referring now more specifically to FIG. 4: in embodiments, applying said force field is most practically realized by reducing a distance between the surfaces. As schematically depicted in FIGS. 3 – 4, distance d is accordingly reduced to a distance d', where $d' < d$. As to be explained in more details below, reducing the distance allows to decrease the potential barrier, i.e., to shift potential minima 32 towards the first surface 15. In variants or in addition to reducing the distance, the (asymmetrical) charges of the surface may be varied, such as to shift the potential minima.

A number of parameters shall impact the potential experienced by the particles. The range of the potentials is determined by the ionic concentration in solution. This range will also determine to which resolution the topographic features can determine the potential. If the range is large, small features in the topography will not be reflected in the potential. Therefore, if the range is short, the potential has higher resolution and will improve the precision of the placement process. The minimum range is given by the minimal achievable separation between the surfaces which ensures transfer of the particles. Therefore the distance d is reduced to values as small as possible, e.g., below 200 nm. In some cases, this distance may need to be reduced to less than 100 nm, as exemplified later. At such separation distances, use can advantageously be made of capillary and/or electrophoretic forces to drag the liquid.

Preferably, present positioning methods are applied to nano-objects 20 having an aspect ratio. In that case, the positioning structures may be grooves 16 (or any elongated structures, or more generally structures reflecting the symmetry of the nano-objects), extending parallel to the average plane 15a of surface 15. Thus, nano-objects having an aspect ratio shall position and furthermore orient according to the potential energy, i.e., according to the grooves. As illustrated in FIGS. 3 – 6 or 8 – 10, aspect ratios shall typically be higher than 2:1. In fact, much higher aspect ratios can be contemplated, e.g., higher than 5:1 or even higher (nanowires). Indeed, it can be realized that because high aspect ratio particles are deposited according to a groove-shaped potential (as in FIGS. 3 – 4), the higher the aspect ratio, the better the obtained deviations (in principle at least). Thus, present methods are all the more advantageous when applied to such objects, at variance with known schemes. However, positioning structures other than grooves can be provided, e.g., in correspondence with the shape of the nano-objects. For example, the positioning structures could be simple indentations or, on the contrary, have more complex shapes than grooves (e.g., “L”, “U” or

"T-shaped", etc.). Even, they can be defined to trap two or more nanoparticles in a defined geometry.

Referring now more specifically to FIG. 1: in embodiments, the first surface 15 is the surface of a layer of a removable material 14, the latter provided on a substrate 11. The removable material is typically an organic resist, preferably a polymer such as polyphthalaldehyde. Working with a removable material eases the upstream manufacture process and provides flexibility in the choice and dimensions of the structures, e.g., in a scanning probe lithography (or SPL) context. In addition, it makes it possible to transfer deposited objects to the substrate and provide additional "layers" of nano-objects, deposited on top of previously deposited objects, as explained below.

The material 14 preferably comprises polymer chains, which are able to unzip upon suitable stimulation (energetic or chemical modification event, protonation, etc.). There, the film 14 can be stimulated via nano-probe 52 for triggering an unzipping reaction of polymer chains. The polymer material may for instance comprise polymer chains for which an energetic or chemical modification event triggers the unzipping reaction. Typically, stimulating a first chemical modification or degradation event triggers an unzipping effect, partial or total. Thus, patterning steps need to include proper stimulation, typically by heating the layer 14 of material via the probe 50, such that a suitable modification event occurs in a polymer chain of the polymer material. The probe 50, 52 should be accordingly designed, e.g., connected to an electrical circuit allowing for heating the probe during a controlled time and at a controlled temperature. Other stimulation types can yet be contemplated. As evoked earlier, the polymer material preferably comprises poly-(phthalaldehydes). An organocatalytic approach to the polymerization of phthalaldehyde is preferred, e.g., using dimeric 1-*tert*-butyl-2,2,4,4,4-pentakis(dimethylamino)-2Λ^5,4Λ^5-catenadi(phosphazene) (P_2-*t*-Bu) phosphazene base as an anionic catalysts in presence of an alcoholic initiator. For example, a resulting polymer (comprising ~ 200 monomer units equivalent to a molecular weight of 27 kDa) possess a low ceiling temperature and further facilitate the ability to create permanent patterns by selective thermolysis, using a heated probe. With such materials, deep patterns can be written with virtually no or small indentation force applied to the probe tip. This minimizes pattern distortion resulting from indenting or displacing the material. Furthermore, polymeric chains can be made of arbitrary length which offers substantial flexibility in tuning the material properties such as the glass temperature and solvent resistance. An additional advantage is that no fine-tuning of intermolecular forces is required, at variance with materials requiring stabilization from secondary structure such as hydrogen bonds.

In variants, the material 14 may comprise a polymer material wherein molecules are cross-linked via intermolecular (non essentially covalent) bonds. Such molecules can conveniently desorb when patterning the polymer material with heated nano-probe 50, 52. An average molecular mass of said molecules is preferably between 100 Da and 2000 Da, and more preferably in the range from 150 Da to 1000 Da, which offers enhanced desorbing properties. The film may be cross-linked via intermolecular bonds, such as van der Waals forces or Hydrogen bonds. When the probe 52, suitably heated, is urged against the surface of the film 14, and interacts therewith, the interaction is likely to desorb one or more molecules. The probe temperature and the time of exposure of the probe to the surface can be suitably adjusted, such as to optimize desorption of molecules.

The material 14 can be deposited onto the substrate using usual techniques, known *per se*, e.g., by spin casting the material, e.g., a polyphthalaldehyde film, onto the substrate.

Referring now to FIG. 2, using a removable material 14 notably offers flexibility, e.g., for creating the positioning structures in the layer 14, prior to the deposition of nano-objects. A preferred technique to achieve this is thermal scanning probe lithography or tSPL, a high resolution patterning technique that has been recently developed in the IBM Zurich Research Laboratory. Briefly, this technique makes use of heated tips to locally remove organic resists with high precision. Dense lines can for example be written at a pitch of 30 nm and complex three-dimensional relief structures can be precisely reproduced. The relief structures can be written in a single patterning step. For two dimensional patterns, tSPL enables 20 times faster patterning compared to usual techniques. Thermal SPL methods may create the written structures directly, enabling immediate inspection after fabrication using the same tip in imaging mode. This results in turnaround times of minutes to create high resolution patterns, which can be used for subsequent steps. For example, the written structures can be used to orient and position gold nanorods with high precision (about 10 nm). The created profiles are limited only by the shape of the writing tip. Grooves have for instance been written featuring opening angles of 60 degrees and a sharp bottom edge corresponding to the radius of the writing tip of about 5 nm. For completeness, 30 fields each comprising 72 of these guiding structures have been written in half a working day; these were subsequently used for deposition experiments.

Referring now more specifically to FIGS. 5 – 6, illustrating final steps after deposition, the removable material 14 may furthermore be advantageously used to transfer nano-objects deposited on surface 15 to the substrate 11. This way, nano-objects 20 can be deposited to several types of substrates 11. Preferably, the removable material is evaporated. This material

is typically a polymer; the polymer is evaporated at a temperature above the ceiling temperature, e.g., 150°C.

As evoked earlier, once the material 14 has been removed, i.e., once the objects have been transferred to the substrate 11, a new layer of material (not necessarily the same removable material) can be provided on top of already deposited nano-objects, and the above steps repeated, in order to build complex architectures of nano-objects. This is for instance illustrated in FIG.7, which is a flowchart depicting steps of positioning methods according to embodiments.

Referring to FIG. 7, steps can typically be carried out in this order:

- S10: substrate 11 is provided (FIG. 1);
- S20: layers 12 and 14 are deposited on top of substrate 11 (FIG. 1);
- S30: desired positioning structure locations are located, e.g., using accurate SPL positioning techniques (FIG. 1);
- S40: positioning structures are engraved on surface 15 at the desired locations, e.g., using tSPL (FIG. 2);
- S50: a cover 18 is brought in proximity with surface 15 and the gap is filled with the ionic liquid 30, e.g., using capillary/electrophoretic forces (FIG. 3);
- S60: an asymmetrical charge is applied to surfaces 15, 17; nano-objects self orient and position in the field (FIG. 3);
- S70: a force is applied, e.g., distance d between surfaces 15 and 17 is reduced and nano-objects deposit onto first surface 15 (FIG. 4);
- S80: ionic liquid is removed after deposition (FIG. 5). Note that liquid can be dragged using the same technique as before, during and after deposition. Residual liquid can be suitably rinsed and dried, if necessary;
- S90: layer 14 is removed (e.g., evaporated) to transfer particles 20 towards the substrate 11; and
- S100: the process may possibly loop back to step S20. Namely, a new layer of material can be provided on top of already deposited nano-objects 20. Then, one may repeat one or more of the above steps S30 – S90. Thus, new surfaces are placed in vis-à-vis and an ionic liquid suspension is confined in-between. Again, after applying an appropriate electrical charge, nano-objects shall self orient and position in the field (S60) and finally deposit (S70) onto the new surface 15, i.e., the surface of the new layer of material. The latter can be subsequently removed (S90), etc.

So far, positioning structures have been essentially contemplated on the receiving surface 15. However, variants are possible, as illustrated in FIG. 13. In this case, this is the second

surface 17 which comprises the positioning structures 16a. In all case, such positioning structures are advantageously provided as grooves, i.e., elongated slots dug in the thickness of the cover 18 and/or layer 14, such as to define suitable minima contours of the electrical potential. In this respect, the repulsion energy occurring between the charged objects 20 and each of the surfaces 15, 17, varies inversely proportionally to the distance, times an exponential damping factor (screened Coulomb potential). In variants, the positioning structures may be given more complex shapes, e.g., U, L, T, etc.

As further illustrated in FIG. 13, reducing the separation distance between the surfaces is most simply achieved by moving surface 15 relatively to surface 17, perpendicularly to an average plane 15a, 17a, e.g., by applying a force perpendicular to the first and/or second surface.

FIG.14 illustrates another variant, wherein surface 17 is tilted with respect to surface 15. In that case, the separation distance between the surfaces 15, 17 can be achieved by moving surfaces 15, 17 relatively to each other, but parallel to the average plane 15a of surface 15. As seen in FIG. 14, the distance at a given position at surface is linearly decreased due to the relative motion of surfaces 15, 17. This could be implemented in a roll to roll setup. No perpendicular actuation is in this case necessary, which has a number of advantages and applications that will be developed later.

FIG.11 is an example of apparatus suitable for implementing present methods. Consistently with the features of the methods recited above, this apparatus 100 at least comprises:
- two surfaces 15, 17 in vis-à-vis, wherein at least one of these surfaces has positioning structures 16. Such surfaces are associated to respective “first layers”, as described earlier;
- a ionic liquid suspension 30 of the nano-objects, confined or dragged between the two surfaces; and
- various positioning means 102 – 108, notably coupled to surface 15 and/or surface 17, i.e., to move the first surface relatively to the second surface, in operation.

Surfaces are charged naturally, in response to the contact with a liquid. Additional chemical means may be involved, e.g., dissociating groups on the surface (additional details are given in the next sections). These surface charges can even be supported by an external electric field, if necessary. Thus, an electrical control means may optionally be provided. The additional electric field may support the asymmetry of the charged surfaces. Fields on the order of delta V/d are typically needed, i.e. on the order of ~ 0.1 V/100 nm. Electrical control means may notably be used to help moving potential energy minima towards the receiving surface. More details shall be given in section 4.

More generally, this apparatus 100 may further comprise any feature described herein in respect of methods as contemplated in this invention.

The above embodiments have been succinctly described in reference to the accompanying drawings. In preferred embodiments, several combinations of the above features may be contemplated. A detailed example is given in the next section.

2. Specific embodiment

The specific embodiment discussed in this section is especially suited for placement of high aspect ratio nano-objects. Capillary-based assembly does not work for such particles because the high densities at the three-phase contact line lead to the formation of close packed configurations which hinder an aligned positioning. Therefore, it is preferred to use trapping forces as discussed in the previous sections to trap and pre-align the nano-objects in preferred directions, which are determined by the positioning structures. From these trapped states, the particles are then approached towards the target surface and finally brought into adhesive contact by approaching the confining surfaces.

The process flow of this placement strategy is depicted in FIGS. 1 – 6. Briefly, the positioning structures are written into a thin film 14 (~ 90 nm) of polyphthalaldehyde (PPA), yet typically thicker than the buried structures 12. For the assembly process, the surface of a cover-slip 18 is approached to less than 200 nm distance to the PPA surface 15. Capillary and/or electrophoretic forces are used to drag a water based suspension of the nano-wires into the remaining gap. The particles are aligned and trapped in the formed potential minima 32 (FIG. 3). External force-fields are then applied to shift the minima 32 towards the receiving surface 15 until adhesive contact is established (FIG. 4). Steps illustrated in FIGS. 3 and 4 are perhaps the most critical steps and will be discussed more extensively later. After drying and rinsing the substrate (FIG. 5), the polymer is evaporated (sublimed) at temperatures above 150°C, i.e., the ceiling temperature of the polymer (FIG. 6). As the present inventors have verified experimentally, such a process preserve the ideal lateral position of the nanoparticles within instrumentation resolution limits (~2 – 3 nm). As a result, highly elongated nano-objects can be placed relative to pre-existing structures 16 on the substrate surface 15.

The steps outlined above can be repeated to deposit a second layer of nano-objects on top of the first layer with similar accuracy in position and orientation. In this way an assembly of different types of particles can be achieved and the functionality of each particle type can be exploited.

As discussed in more details below, a mechanical setup can be constructed, which allows to align the cover slip precisely, parallel to the substrate underneath, and to approach with nanometer precision. The setup is preferably designed for high quality optical access and the trapping performance can be studied in-situ. This setup can then be used to study the complex interplay between surface topography, curvature and charging with the confined nano-particle suspension. The confinement can be varied in-situ due to the movable cover slip and confinement effects can be studied without varying other parameters.

In summary, embodiments disclosed herein use geometrical confinement in combination with top-down designed topographical features to manipulate the local electrostatic potential in low ionic-strength solutions. A local electrostatic minimum is created which traps and aligns the nano-objects. In a second step the objects are forced into adhesive contact by approaching the confining surfaces. The position and orientation is further focused by the shape matching topographical features on the receiving substrate. The placement process relies only on the charge of the nanoparticles and the confining surfaces. Any type of charged object can be used, ranging from high aspect ratio nanowires over flexible polymers (like DNA) down to potentially even single proteins. The placement can be precisely registered to underlying functional structures. Several placement steps can be repeated with a similar accuracy. In particular placing high aspect ratio nanowires according to methods described herein leads to a wide range of scientific and economic high impact applications, some of which are discussed in the next section.

3. Applications

The methods discussed in the previous sections have the following unique features in comparison to conventional placement methods.

First, the placement process is separated into a trapping step and a transfer step. This has several consequences. Elongated or more complex shaped objects can first adapt their planar orientation according to the trapping potential before they are transferred to the substrate surface. The forces acting on the objects are well defined by the shape of the electrostatic potential and the transfer method. This allows for placing fragile pre-assembled objects in a defined state. The separated steps allow for spectroscopically assessing the properties of the captured particle. Depending on the observed properties, decision can be made as to whether the particle should be positioned or disposed.

Second, use is made of a decomposable polymer as a receiving material and a scanning probe based method to design the guiding topography. The polymer allows for decoupling the placement process from the underlying substrate and the writing method enables registration to underlying features. Combining both aspects multiple subsequent placement steps can be achieved with precise registry. These unique features can be exploited for a number of applications. Two examples of applications are discussed below.

A first application concerns the positioning of several semiconducting or metallic nanowires on top of two pre-structured pads 12, as illustrated in FIGS. 1 – 6 or FIG. 8. One may accordingly establish a measurement of the electrical characteristics of a single nanowire 20 placed according to the present methods. Another implementation is to place the nanowires 20 in parallel and in high density across two predefined electrodes or pads (see FIG. 9). Such an assembly goes beyond FinFETs currently suggested for the 14 nm node in CMOS electronics. In fact, it can be realized that the performance of (top-down fabricated) nanowire field effect transistors is superior to state of the art CMOS technology due to the better electrostatic coupling of a wrapped around gate in comparison to a planar gate. Both implementations demonstrate the accuracy of the placement relative to pre-structured features on the substrate. In addition, improved placement densities are achievable thanks to the present positioning methods. In some (if not most) applications, the wires should be placed as dense as possible.

In a second application, functional nanowires grown by vapor-liquid-solid growth may be positioned to exploit the functionality of the wires. Functionality can be integrated by controlling the dopant concentrations during growth or building hetero-structures to other materials along the nanowire direction or in the radial direction in form of core-shell structures. The nanoscale dimension enables the combination of materials with much larger deviation in lattice constant than possible in planar geometry. This enables the production of field effect transistors, light emitting or harvesting devices, etc., in single nanowires. For example, FIG. 10 depicts an axially structured nanowire 20 including a gate oxide 20a and a metal gate wrap 20b, positioned across two electrodes. In a second placement step a metallic nanowire 20c is positioned to contact the gate metal 20b.

In applications, wires of different internal functionality could be integrated into a working circuit which combines single functions to achieve greater functionality. An example would be to integrate a field effect transistor nanowire to drive a light emitting diode nanowire. Thus, present positioning methods provide a new way to approach the fabrication of the so called ‘nanoprocessor’.

4. Example of apparatus

FIG. 11 exemplifies a possible setup for implementing methods as described above. A cover slip 18 is mounted on a holder between the substrate 11 and an oil/water immersion 111 microscope objective 110. The substrate is mounted on a 5 degrees of freedom positioning system realized by a 3-axis piezo-scanner 104 and three piezopositioners 106 mounting the substrate in a kinematic holder. The vertical coarse approach and parallel alignment of substrate is done by the piezo positioners 106 (30 nm resolution). Fine adjustments of the gap distance are done by the piezo scanner 104 (100 × 100 × 100 μm). A coarse positioning system 108 can be used to orient the cover-slip to the patterned parts in the substrate. Such positioning systems can be obtained using components adapted from SPM systems.

The cover slip may be patterned by optical lithography comprising a center island of 200 – 500 μm diameter which is raised by 20 – 50 μm. The recess of the remaining area can be provided to avoid problems with dirt particles 60 preventing the two surfaces to approach to distances below 100 nm.

The setup may be characterized using interferometric distance measurements 120, which allows for testing the stability of the setup and the response to the pressures induced by filling with liquid and approaching the confining surfaces. This, way, mechanical stability of < 1 nm in vertical direction and approach distances below 50 nm may be contemplated. The position and motion of the particles will be detected optically. For gold nanoparticles the plasmonic response can be exploited using dark field microscopy. For semiconducting particles scattered light or fluorescence can be detected. The Brownian motion of the particles at these length scales requires exposure times of < 1 ms. Optimally the time resolution of the setup needs to be sufficient to track the motion of single particles. However, for determining the shape of the potentials from the particle positions a statistical measurement of the positions is sufficient. Preferably, a microscope including a high speed camera can advantageously be used, to enable high fidelity detection path.

In operation, positioning of the substrate is carried out using the piezo-motor driven x – y coarse positioning system 102, the fine positioning piezo stage 104 and the three piezo positioners 106 to align the plane of the sample and the cover slip 18. The cover slip is mounted on the holder and can be manually moved in vertical direction 108. The cover-slip is etched outside the optical viewing window with a recess 18a having a depth of 20 – 50 μm to accommodate dirt particles and an imperfect flatness of the sample. The microscope 110 is used to determine the particle positions using fluorescence or light scattering detection. The

orientation of the cover slip with respect to the substrate plane is measured using the laser interferometer 120.

In variants, apparatuses (and methods) according to the invention may include any one, or several of the features recited in respect of the setup of FIG. 11.

5. Technical implementation details

5.1 Surface characterization and determination of the particle potentials

An in-situ characterization of the surface and particle potentials developed in the fluidic slit can be useful to understand the observed phenomena. For instance, electrodes can be implemented into the setup to generate lateral electric fields. The zeta potential of the particles can be obtained using a commercial Zetasizer (Malvern Instruments). If the particle potentials are known, the potential of the confining surfaces can be extracted from the particle speed in eletrophoretic/osmotic flow measurements in confined (unstructured) nanoslits. First, the potential of the glass surfaces can be determined using two confining glass surfaces. Using this knowledge the potential of the confining polymer surface can be determined in a system using a polymer and a glass surface.

Two types of stabilization strategies for the particle solutions can notably be used here. One may for instance use nanoparticles stabilized by organic surfactants. Nanoparticle solutions of this type are readily available commercially (Nanopartz, US), stabilized e.g. by Cetyl trimethylammonium bromide (CTAB). The surfactants also provide a simple way to control the charge density at the polymer surface, because the formation of a mono/multi-layer at the surfaces is expected. Some experimental results on the stability of CTAB stabilized Au nanorods have corroborated this. Unspecific adsorption on the polymer surface was not observed. The drawback of using organic stabilizers is that they may influence the functional performance after assembly and may therefore need to be removed. They may e.g., induce contact problems, if organic matter remains between the assembled particles and electrodes on the surface. In first experiments with gold nanoparticles this was however not observed.

One may also use purely electrostatically stabilized particle solutions in order to avoid organic molecules. It has been shown that the conductivity is enhanced in close packed assemblies of such particles. Methods are known which allows for exchanging the organic stabilizers by ions and works for a wide range of particles.

Both stabilization methods can also be used for stabilizing nanowires in solution. The measured values can be used to feed the simulations described below. They also give initial

values to estimate the depth of the trapping potentials and guide the strategy for placing the nanoparticles.

5.2 Trapping behavior vs. particle size/charge, ionic concentration and trap geometry/confinement

The trapping potential of the system may deserve investigation. One may for example rely on the unique patterning capabilities offered by tSPL methods to define topographical structures with high precision in three dimensions. In variants, one may use nano-imprint lithography techniques to create such structures with high throughput. The trapping potentials may be determined by measuring the position of the nanoparticles in real space and time. This can be done optically using a high numerical aperture (NA) objective and detecting scattered light from the particles.

Another possible concern is the observation of a curvature induced trapping potential and how it interplays with the topographically induced electrostatic minimum. In a feedback loop with modeling results the topography which induces the trapping potential and the charge densities can be jointly optimized. This makes it possible to find optimal conditions which provide a stable trapping, e.g., of nano-objects with high aspect ratios.

5.3 Fundamentals of trapping, transfer and fixation

Theoretical modeling efforts and computer simulations may for instance be carried out using the commercial package COMSOL, in order to understand the effects discussed in sect. 5.2 and 5.4. This allows for understanding the trapping mechanisms including the curvature induced trapping potentials. In addition, the effect of external fields on the trapping potentials can be investigated. Some recipes of how to use COMSOL for related applications are available in the literature. The underlying idea is to solve the nonlinear Poisson–Boltzmann in three dimensions using charge neutrality and constant charge boundary conditions at the interfaces.

5.4 Establishing technical implementation details of the transfer methods

Here the goal is to optimize the conditions in the fluidic slit in a way that trapped particles can be transferred into adhesive contact with the substrate by external manipulation. How to achieve this can benefit from (but does not depend) on the results obtained in the modeling and simulation work evoked in sect. 5.3. The forces acting between particles and a (planar) surface are given by the well known Derjaguin, Landau, Verwey, and Overbeek (DLVO) theory. The theory predicts that at very small separations the attractive van-der-Waals forces dominate the electrostatic repulsive force and a nano-object may therefore be pulled into contact. However, to approach such distances the repulsive electrostatic interactions need be

overcome. A successful implementation of such a transfer process was demonstrated in the past. For instance, a successful transfer of 80 nm gold nanoparticles was achieved using laser powers ranging from 350 μW to 10 mW, corresponding to (calculated) forces of up to 15 pN. A preferred way of achieving the transfer is to use purely electrostatic forces also for this step. This ensures that the trapping and placement steps are only dependent on the charge of the particles and no other physical property. As discussed earlier, an idea is to use asymmetric charge densities on the receiving PPA surface 15 and the cover slip surface 17. In that case the potential minimum can be shifted toward the side with the lower potential value.

The electrostatic potential can be calculated analytically assuming constant surface potentials and a planar geometry. The resulting potential ψ between a first surface positioned at $d = 0$ having a surface potential of 1/3 $k_B T/e$ (using standard notations) and a second surface at d_S = 2, 3, 5, and 10 κ^{-1} (κ^{-1} being the Debye length) having a surface potential of 1 $k_B T/e$ is plotted in FIG. 12, upper panel. The four curves thus correspond to surface separations of 10, 5, 3, and 2 κ^{-1}. The lower panel depicts the potential barrier $\Delta\psi$ as a function of approach distance κd.

For large distances, the potential is sufficiently strong to trap certain types of particles. As the distance between the surfaces decreases, the potential barrier diminishes, as seen in FIG. 12, lower panel. Depending on the charge z of the particles this barrier has to be reduced to a few times $k_B T/(z e)$ for the thermal energy to overcome the barrier. With the parameters retained for the calculation of FIG. 12, the barrier vanishes at ~1.75 κ^{-1}. To translate these numbers into real-world dimensions, one needs to plug in values for the salt concentration. One may for instance use the parameters obtained in trapping experiments. The salt concentration for deep trapping potentials was found to be 0.07 mM (milli Molar), which leads to a Debye length of κ^{-1} = 36 nm for monovalent ions. At these salt concentrations the potential barrier is fully developed at a distance of d ~ 5 κ^{-1} = 180 nm (see FIG. 12). To successfully transfer the particles into adhesive contact the surfaces have to be approached to a distance of ~72 nm. These calculations show that the conditions for transferring the particles are fortunately compatible with the conditions for a stable trapping of the particles. One may further adjust the charges on the cover slip by silanization. Potentials larger than 120 mV can be achieved and adjusted by the pH value. The exact charge on the polymer is unknown *a priori* and may need to be determined, as discussed in sect. 5.1. It can otherwise be estimated. In a first attempt, one may use the concentration of CTAB surfactants to adjust the surface charge on the polymer. The colloidal solutions used in experiments carried out by the present inventors had a CTAB concentration of 0.1 mM. Using relatively high concentrations guarantee the stability of the solution at the three-phase contact line using the capillary assembly method. The solutions were examined to be stable to at least 0.01 mM concentration.

5.5 Registering with buried structures

As said earlier, accurate SPL-like positioning techniques may be used.

5.6 Stacked assembly

As touched earlier, one may want to repeat the placement process onto nano-objects assembled in a previous placement step. A question here is whether adhesive contact with the first layer is sufficiently stable to allow subsequent coating with PPA. An alternative method to coat the first layer of objects is to float a PPA film from a template surface. Depending on this step, subsequent steps can be carried out identically. If sufficient yield is achieved in the placement process the stacking could be repeated several times.

A first application consists of positioning a metallic nanowire in a first step across two electrodes or pads, as depicted in FIGS. 1 – 6 and 8. Two additional contacts to this can then be established by placing two additional metallic wires crossing the first wire and attaching to two additional electrodes. One can accordingly establish a four point measurement using present placement methods. The contact resistance of crossed wires can be studied and improved, if necessary. Insights collected here could be used in sect. 5.8.

5.7 Reusable master strategies

Next, one may want to design a parallel placement and printing scheme to achieve high throughput placement of nano-objects, be it at the price of the placement accuracy. In an implementation, topographical features can be etched into the cover slip using existing dry etch methods. The following sequence could be achieved: trapping, transfer into adhesive contact, moving to a new printing position, refilling of the gap by electophoretic forces. This allows for patterning large areas with repeated assemblies of particles. Alternatively the topography inducing the trapping potentials can be fabricated into the cover-slip (see FIG. 13) or into a silicon master wafer (see FIG. 14).

In the embodiment of FIG. 13, the cover slip is patterned in order to topographically induce the trapping potentials. After deposition by decreasing the gap distance, the template can be placed at a different position. The gap is refilled with particles by increasing the distance and/or by using electrophoretic means. The placement can be repeated at a new position.

Concerning FIG. 14, direct assembly into a silicon master template may be achieved using a tilted cover slip. The particles in the master are printed in a subsequent step onto a receiving surface (not shown) and the master can be reused.

The guiding potentials can be similarly shaped and the transfer to the substrate can be achieved by similar means. Both approaches have in common that the topographic shapes used for trapping can be reused multiple times. In the first case (FIG. 13) the structures are only used to form the potential minimum. The particles are transferred onto the opposite surface, by way of the potential minima. In the second case (FIG. 14) the particles are assembled into the master stamp, and are then printed after drying onto a receiving surface in a printing step. Thus, the trapping and printing steps are either done sequentially as discussed above or by sliding a tilted cover slip across the surface as indicated in FIG. 14. Using the tilted slip, a vertical motion is unnecessary since the gap reduces during the sliding motion. Large areas can accordingly be patterned at potentially high throughput values.

5.8: Assembly of functional circuit

As another example, one may pattern a functional circuit from stacked functional nanowires placed in a cross-type fashion and aligned to pre-patterned electrodes on the surface, as in FIG. 10. The circuit may implement different types of wires for different functionality, e.g. semiconductor wires comprising a built-in FET and metallic or silicided wires for electrical connections.

While the present invention has been described with reference to certain embodiments, it will be understood by those skilled in the art that various changes may be made and equivalents may be substituted without departing from the scope of the present invention. In addition, many modifications may be made to adapt a particular situation or material to the teachings of the present invention without departing from its scope. Therefore, it is intended that the present invention not be limited to the particular embodiments disclosed, but that the present invention will include all embodiments falling within the scope of the appended claims. In that respect, not all the components/steps depicted in the accompanying drawings need be involved, depending on the chosen embodiments. In addition, many other variants than explicitly discussed above can be contemplated. For example, other materials can be used, as well as other separation distances.

REFERENCE LIST

11 Substrate
110 Microscope Objective
111 Oil
112 Laser Beam
114 Microscope Objective Positioning Means
12 Pads (Pre-Existing Structures On The First Surface)

120	Interferometric Distance Control
14	Layer Of Removable Material (Polyphthalaldehyde)
15	First Surface
15a	Average Plane Of The First Surface
16	Positioning Structures (Grooves On The First Surface)
16a	Positioning Structures (Grooves On The Second Surface)
17	Second Surface
17a	Average Plane Of The Second Surface
18	Cover (Cover-Slip)
18a	Cover Recess
20	Nano-Objects
30	Ionic Liquid Suspension
31	Potential Energy
32	Potential Energy Minima
50	Spl Cantilever
52	Spl Probe Tip
60	Dirt
100	Apparatus
102	Coarse Positioning Means (Piezo-Motor Driven x – y coarse positioning system)
104	Fine Positioning Piezo Stage (Piezo Scanner)
106	Piezo Positioners
108	Coarse (Second Surface) Positioning Means
d	Distance Between The Surfaces
d'	Reduced Distance Between The Surfaces

CLAIMS

1. A method for positioning nano-objects on a surface, said method comprising the steps of:

providing a first surface and a second surface in a position facing each other, wherein at least one of said surfaces exhibits at least one positioning structures having dimensions on the nanoscale; and

an ionic liquid suspension of said nano-objects between said two surfaces, wherein said suspension comprises two electrical double layers each formed at an interface with a respective one of said two surfaces and said surfaces have electrical charges of the same sign;

enabling said nano-objects in said suspension to position according to a potential energy resulting from said electrical charge of said two surfaces; and

depositing at least one of said nano-objects on said first surface according to said positioning structures by shifting the minima of said potential energy towards said first surface.

2. The method of claim 1, wherein depositing said nano-objects reduces a distance between said surfaces, so that said minima of said potential energy shifts towards said first surface, and wherein said distance is reduced to less than 200 nanometers.

3. The method of claim 1 or claim 2, wherein said two surfaces provided have an asymmetrical electrical charge, so that each said surface exhibits the same electrical charge sign and said second surface has a higher electrical charge than said first surface.

4. The method of any of claims 1 to 3, wherein: said nano-objects have an aspect ratio higher than 2:1;

said one or more positioning structures comprise at least one grooves extending parallel to an average plane of said first surface or an average plane of said second surface; and

enabling said nano-objects to position according to said potential energy further comprises enabling said nano-objects to orient according to said potential energy.

5. The method of any of claims 1 to 4, wherein said first surface provided is a surface of a layer of a removable material provided on a substrate and comprises a polymer.

6. The method of claim 5, wherein said method further comprises a step of, prior to providing said surfaces, creating said positioning structures in said layer of the removable material.

7. The method of claim 5 or claim 6, wherein said method further comprises a step of, after

depositing said nano-objects, removing said removable material to transfer at least one nano-objects deposited on said first surface to said substrate.

8. The method of claim 7, wherein said step of removing said removable material comprises evaporating said removable material, wherein said removable material is a polymer, and said polymer is evaporated at a temperature above the ceiling temperature of said polymer.

9. The method of claim 7 or claim 8, wherein said method further comprises a step of, after removing said removable material, providing a new layer of material on top of said deposited nano-objects and repeating the steps of: providing said two surfaces and said ionic liquid suspension; enabling nano-objects to position; and depositing, wherein said two surfaces now comprise a surface of said new layer of material as a new first surface.

10. The method of any one of claims 5 to 9, wherein said method further comprises a step of, prior to providing said surfaces, depositing said removable material onto said substrate.

11. The method of claim 10, wherein depositing said removable material comprises depositing said removable material onto both said substrate and at least one pre-existing structures on said substrate.

12. The method of any one of claims 1 to 10, wherein said method further comprises a step of dragging said suspension of nano-objects, into and from a gap between said two surfaces, wherein said gap is less than 200 nm.

13. The method for positioning nano-objects according to any one of claims 1 to 10, wherein the method further comprises dragging (S80) the suspension of nano-objects, for example a water-based suspension, from a gap between the two surfaces, the gap being less than 200 nm.

14. The method for positioning nano-objects according to any one of claims 1 to 13, wherein depositing comprises reducing a distance between said surfaces, wherein reducing said distance comprises moving said first surface relative to said second surface, perpendicularly to an average plane (15a, 17a) of one of said two surfaces.

15. The method for positioning nano-objects according to any one of claims 1 to 14, wherein said second surface provided is tilted with respect to said first surface and wherein said depositing step comprises reducing a distance between the said surface, so that said minima of said potential energy are shifted towards said first surface, wherein said reducing said

Date Reçue/Date Received 2020-10-23

distance comprises moving said first surface relative to said second surface, parallel to an average plane of said first surface.

16. An apparatus (100), adapted for implementing a positioning of nano-objects on a surface, comprising:

a first surface and a second surface, in a position facing each other, wherein at least one of said two surfaces has positioning structures with dimensions on the nanoscale;

an ionic liquid suspension of nano-objects (20) between said two surfaces, wherein said suspension comprises two electrical double layers each formed at an interface with a respective one of said two surfaces and said surfaces having electrical charges of the same sign; and

a positioning means coupled to said first surface and said second surface, wherein said positioning means is configured to move said first surface relatively to said second surface during operation.

17. An apparatus for implementing a method for positioning of nano-objects on a surface, said apparatus comprising:

a first surface and a second surface, in a position facing each other, wherein at least one of said two surfaces has positioning structures with dimensions on the nanoscale;

an ionic liquid suspension of nano-objects (20) between said two surfaces, wherein said suspension comprises two electrical double layers each formed at an interface with a respective one of said two surfaces and said surfaces having electrical charges of the same sign; and

a positioning means coupled to said second surface, wherein said positioning means is configured to move said first surface relatively to said second surface during operation.

18. The method of claim 5, wherein the polymer is polyphthalaldehyde.

19. The method of claim 6, wherein said positioning structures in said layer of the removable material are created by a thermal scanning probe lithography technique.

20. The method of claim 10, wherein depositing said removable material comprises spin casting a polymer film onto said substrate.

21. The method of claim 11, wherein said one or more pre-existing structures are electrodes or pads.

22. The method of claim 12, wherein said dragging is carried out by way of capillary and electrophoretic forces.

23. The method of claim 12, wherein said dragging is carried out by way of electrophoretic forces.

24. The method of claim 13, wherein said second surface comprises said positioning structures.

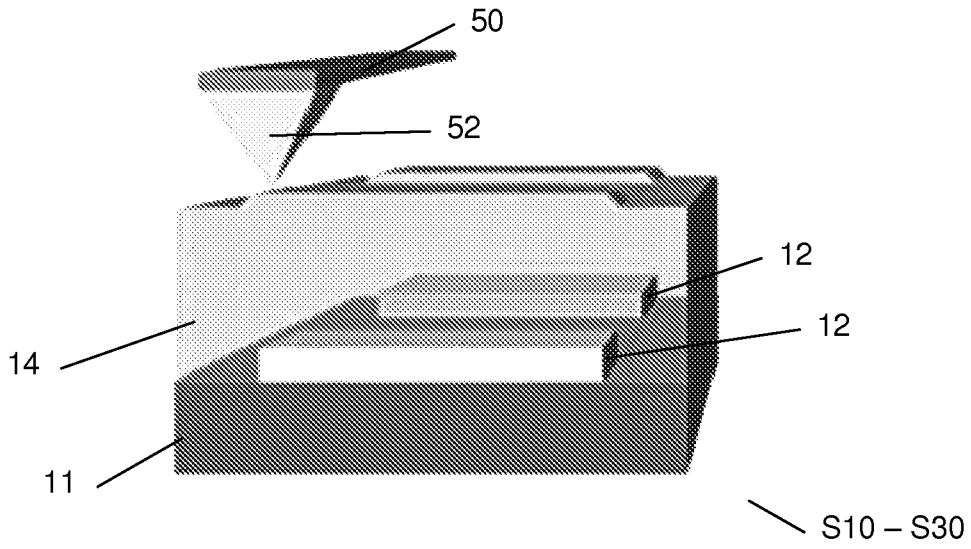

FIG. 1.

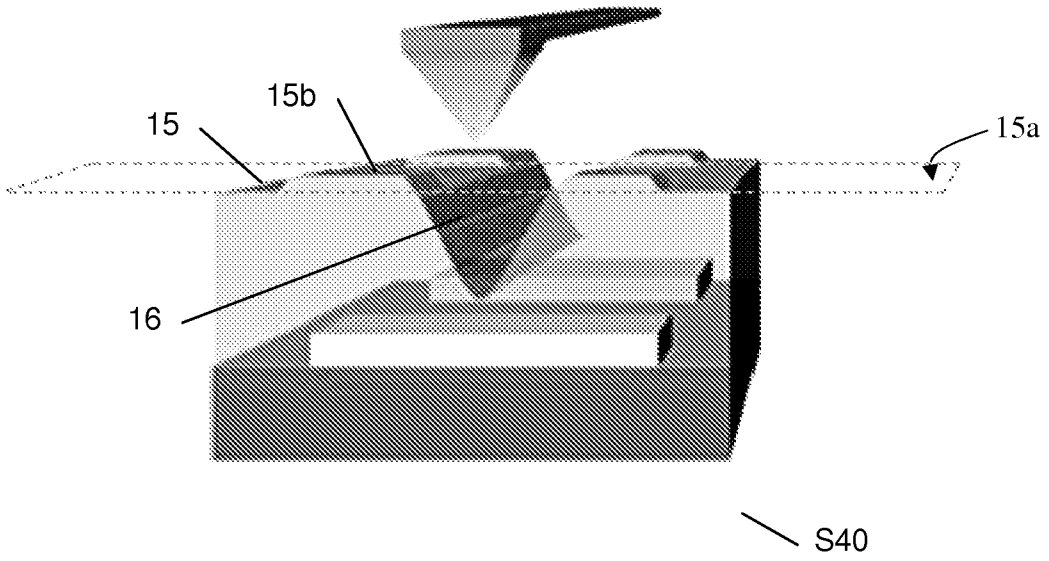

FIG. 2.

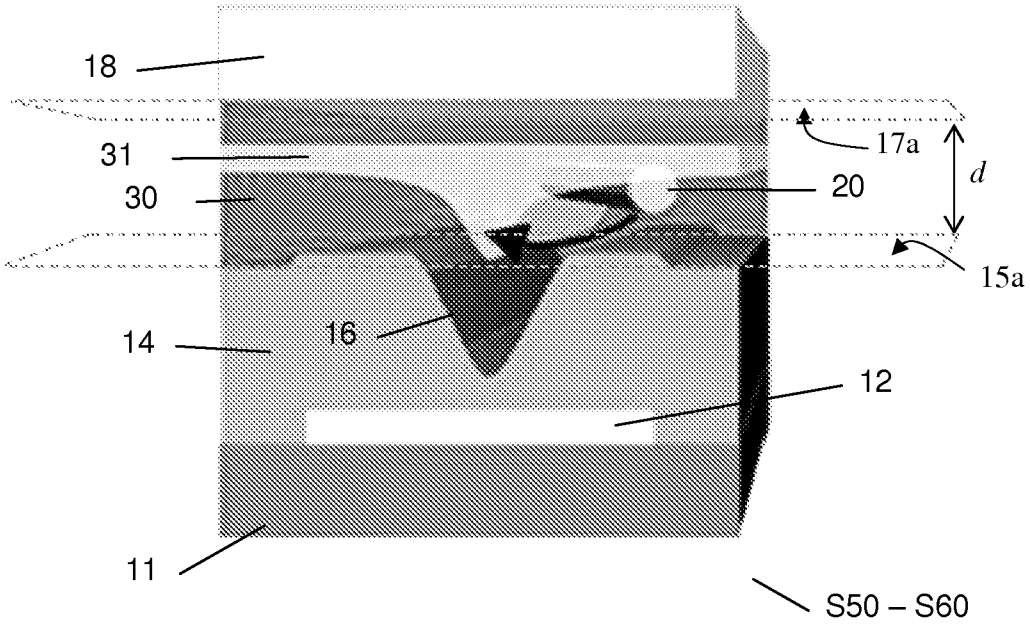

FIG. 3.

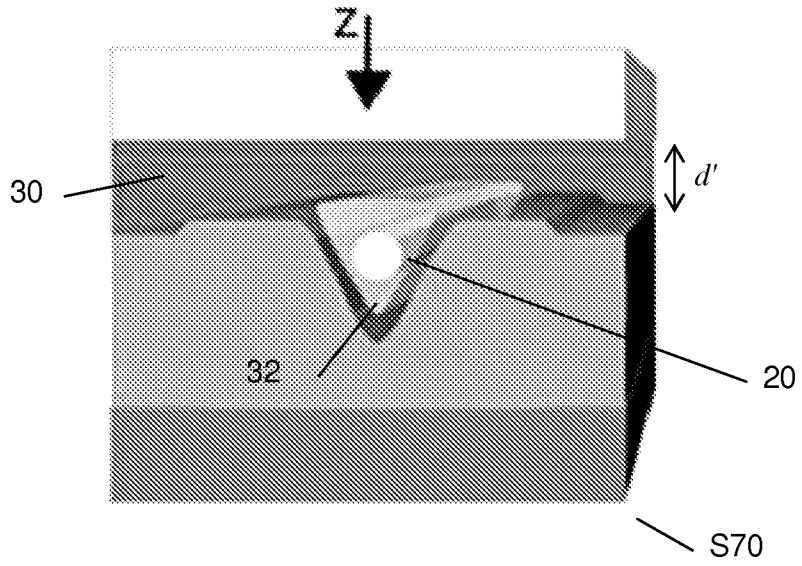

FIG. 4.

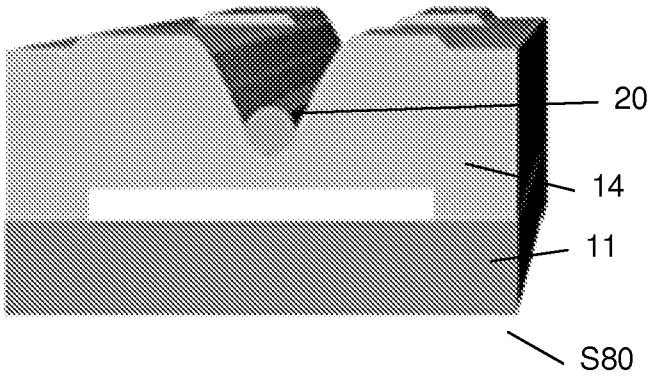

FIG. 5.

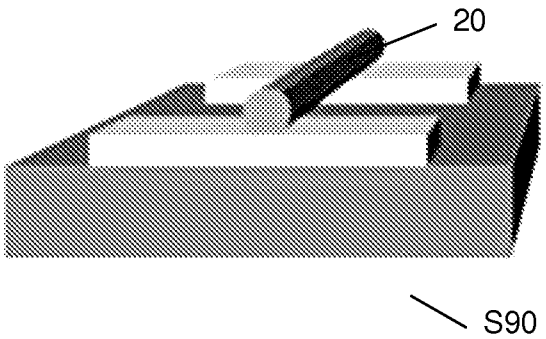

FIG. 6.

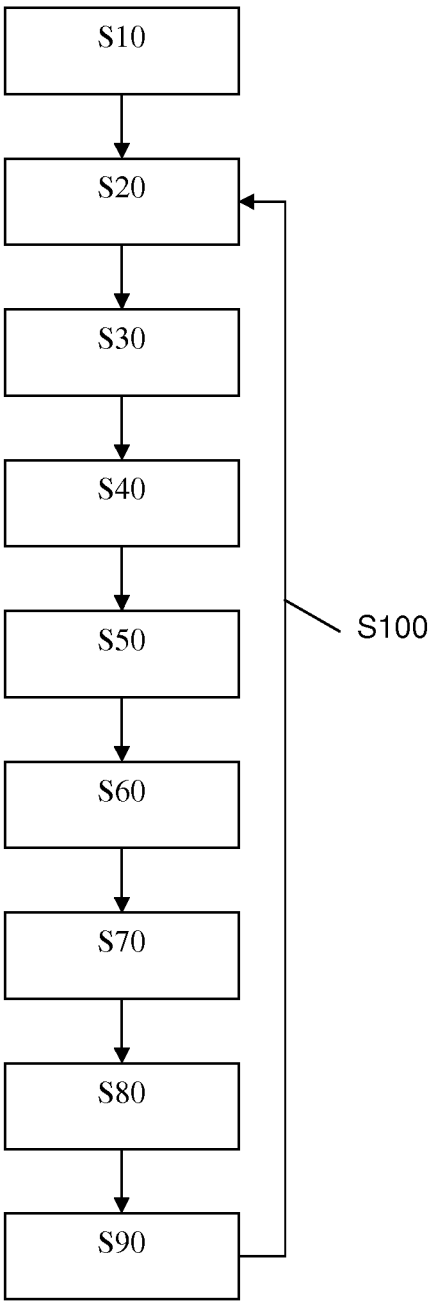

FIG. 7.

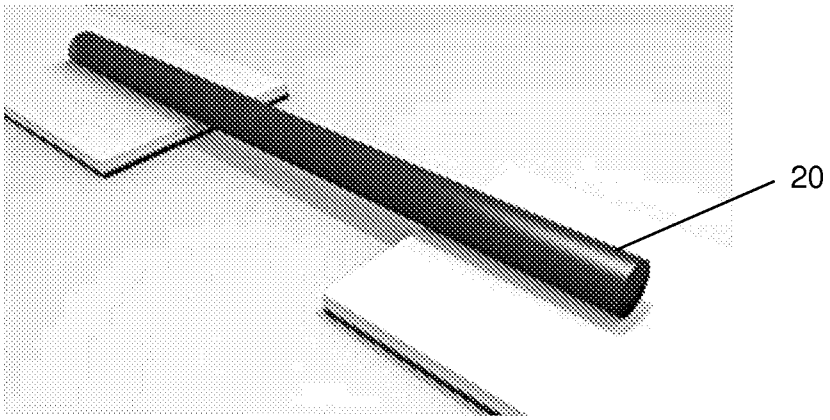

FIG. 8.



FIG. 9.

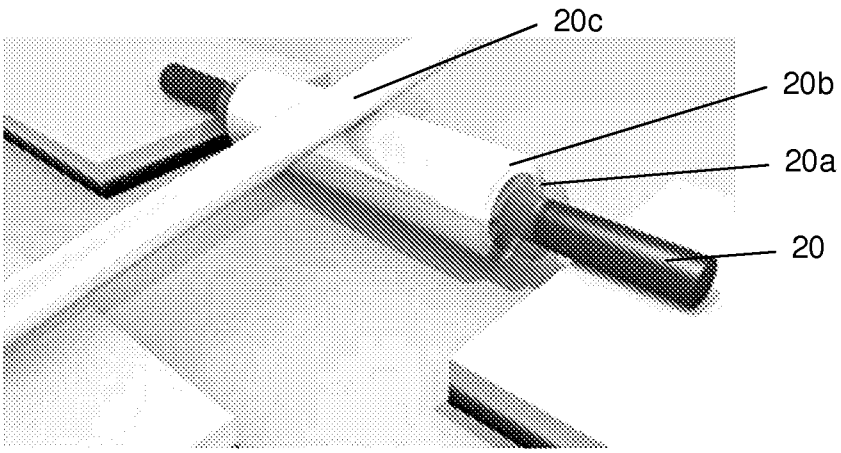

FIG. 10.

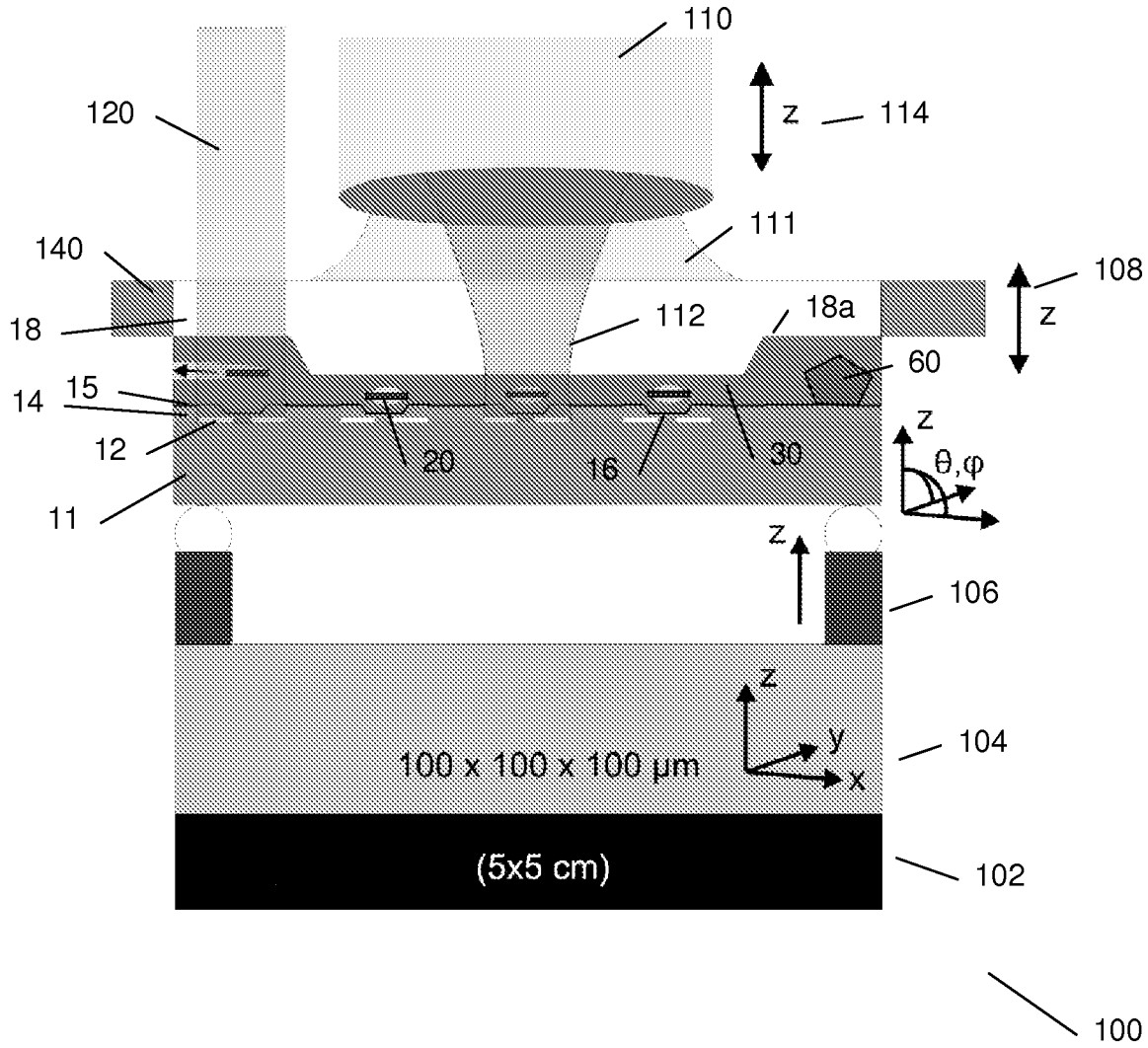
110
120
z
114
111
140
108
z
18
112
18a
60
14
15
12
11
20
16
30
z
θ,φ
z
106
z
y
x
100 x 100 x 100 µm
104
(5x5 cm)
102
100

FIG. 11.

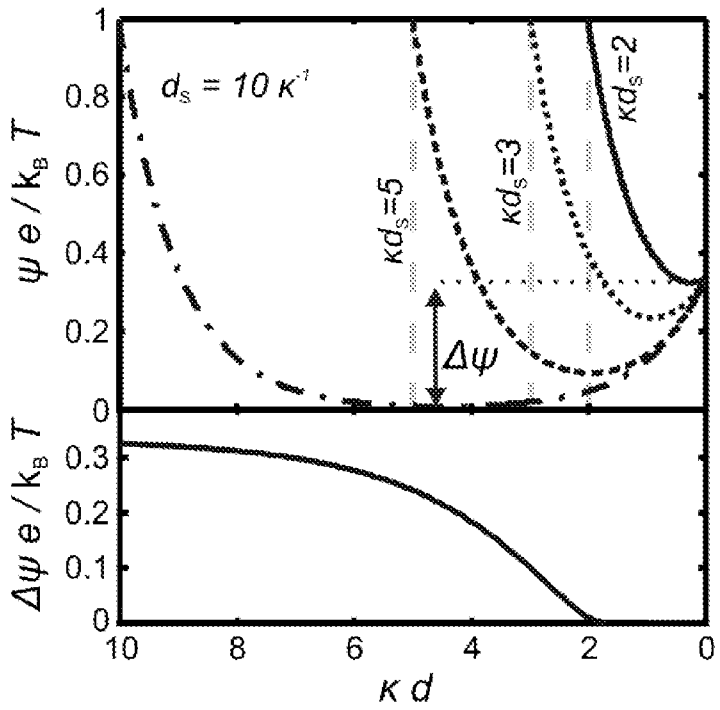

FIG. 12.

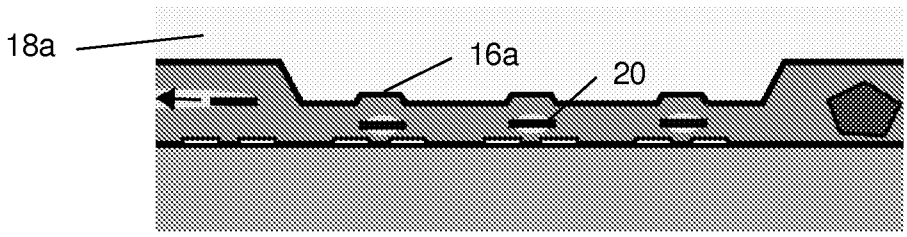

FIG. 13.

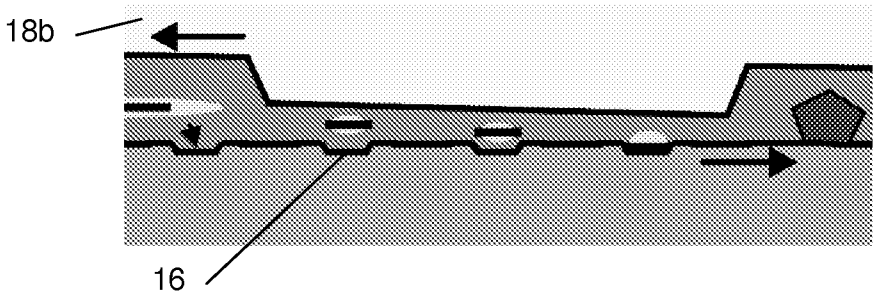

FIG. 14.

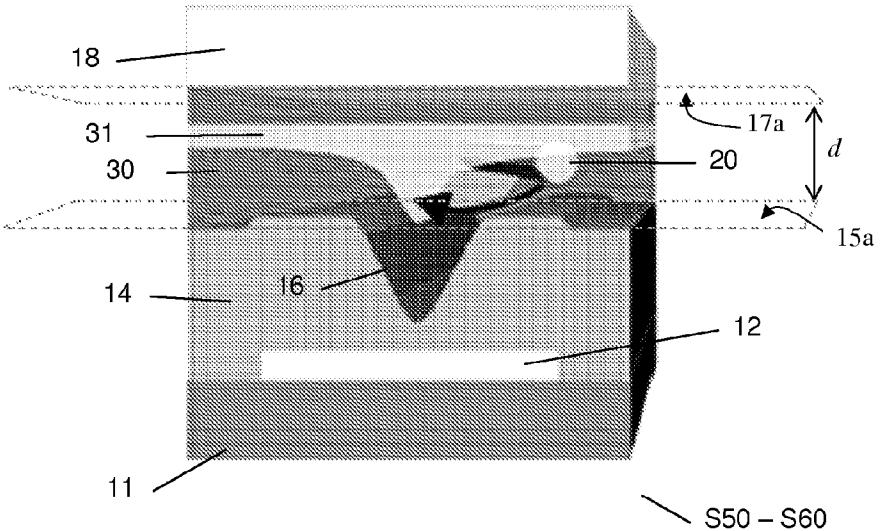
18
31
30
14
16
11
17a
d
20
15a
12
S50 – S60