US 20050182960A1

(19) United States

(12) Patent Application Publication (10) Pub. No.: US 2005/0182960 A1

Petry et al. (43) Pub. Date: Aug. 18, 2005

(54) SYSTEMS AND METHODS FOR MANAGING THE TRANSMISSION OF ELECTRONIC MESSAGES VIA THROTTLING AND DELAYING DELIVERY

(75) Inventors: **Scott M. Petry**, Palo Alto, CA (US); **Shinya Akamine**, Menlo Park, CA (US); **Peter K. Lund**, Menlo Park, CA (US); **Fredric L. Cox**, San Jose, CA (US); **Michael J. Oswall**, Berkeley, CA (US)

Correspondence Address:
BAKER & MCKENZIE
PATENT DEPARTMENT
2001 ROSS AVENUE
SUITE 2300
DALLAS, TX 75201 (US)

(73) Assignee: **POSTINI, INC.**, Redwood City (US)

(21) Appl. No.: **10/908,061**

(22) Filed: **Apr. 26, 2005**

Related U.S. Application Data

(63) Continuation of application No. 10/370,118, filed on Feb. 19, 2003.

(60) Provisional application No. 60/357,893, filed on Feb. 19, 2002.

Publication Classification

(51) **Int. Cl.**[7] **H04L 9/00**

(52) **U.S. Cl.** **713/200**

(57) **ABSTRACT**

The present invention provides an electronic message management system (EMS) that includes a real-time feedback loop where data is collected from the electronic messages on incoming connection attempts, outgoing delivery attempts, and message content analysis, and written to a centralized data matrix. A separate process accesses the data matrix and analyzes trends in that data. The detected data patterns, trends or behavior is based on configuration parameters for the recipient. Based on these determinations, the process is able to instruct components in the EMS to accept, redirect, refuse, modify, defer, or otherwise dispose of the connection request, the delivery attempt, or the message. Associated methods for managing the transmission of electronic messages are also disclosed.

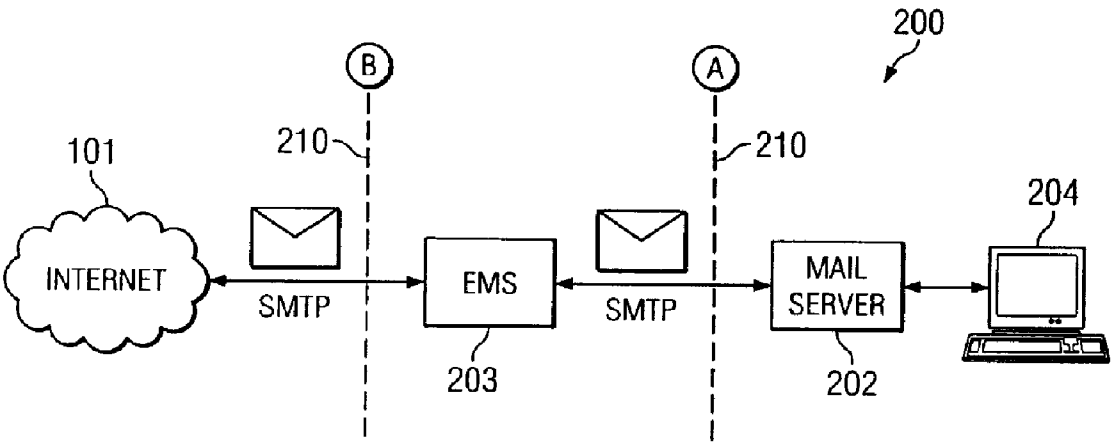

FIG. 1
(PRIOR ART)

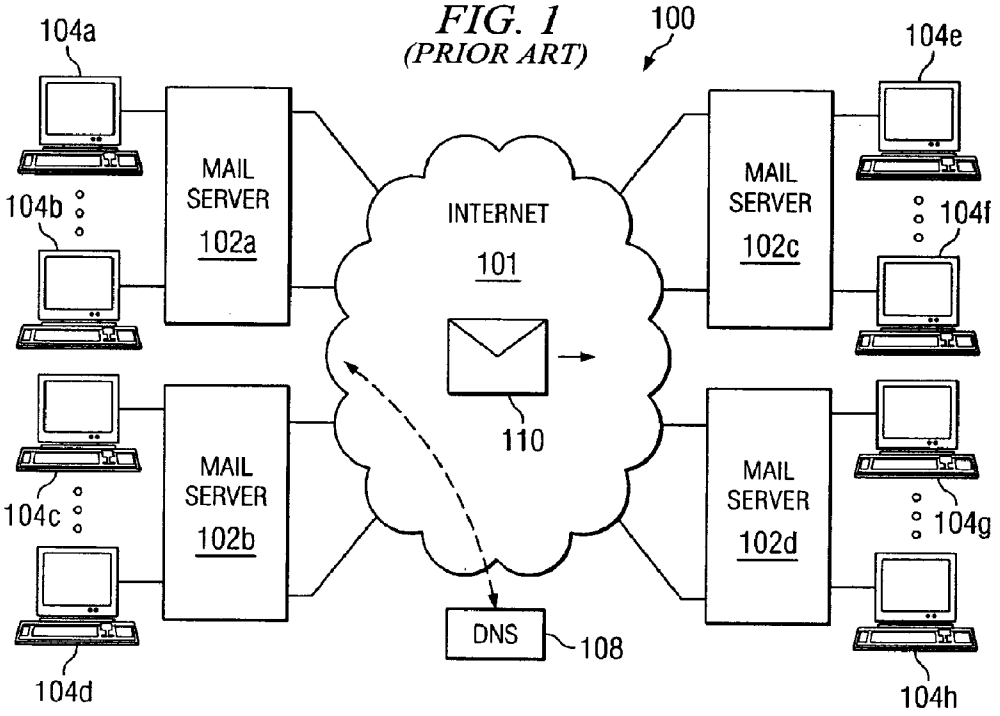

FIG. 2

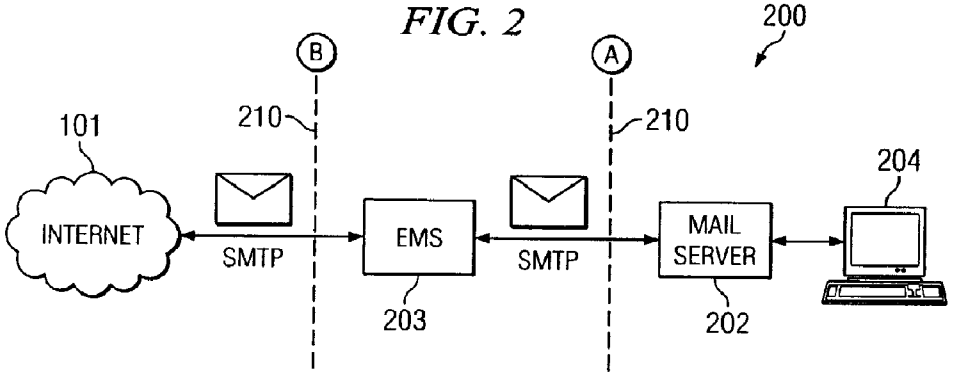

FIG. 3

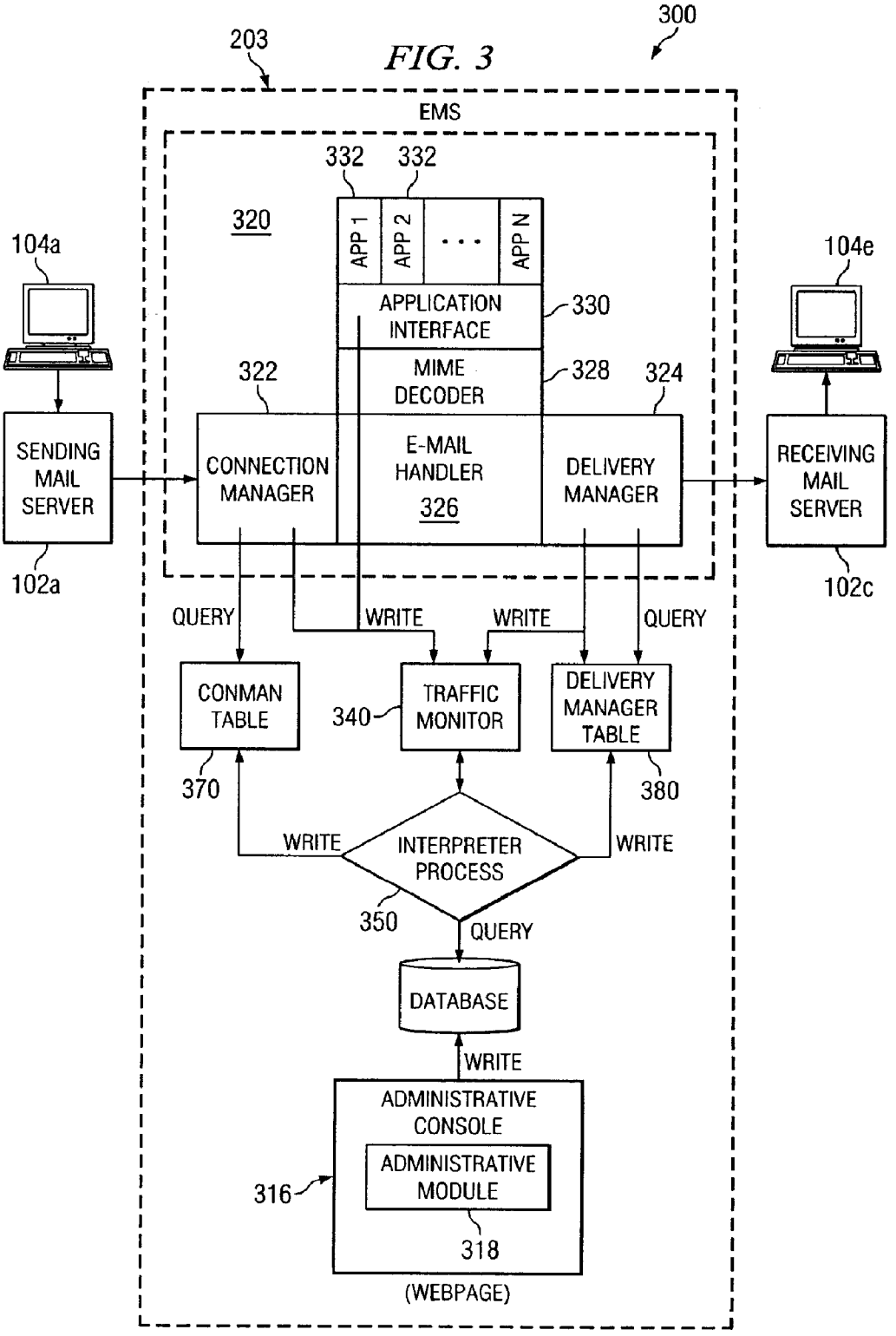
300
203
EMS
332
332
320
APP 1
APP 2
APP N
104a
104e
APPLICATION INTERFACE
330
MIME DECODER
328
322
324
SENDING MAIL SERVER
CONNECTION MANAGER
E-MAIL HANDLER
326
DELIVERY MANAGER
RECEIVING MAIL SERVER
102a
102c
QUERY
WRITE
WRITE
QUERY
CONMAN TABLE
340
TRAFFIC MONITOR
DELIVERY MANAGER TABLE
370
380
WRITE
INTERPRETER PROCESS
WRITE
350
QUERY
DATABASE
WRITE
ADMINISTRATIVE CONSOLE
316
ADMINISTRATIVE MODULE
318
(WEBPAGE)

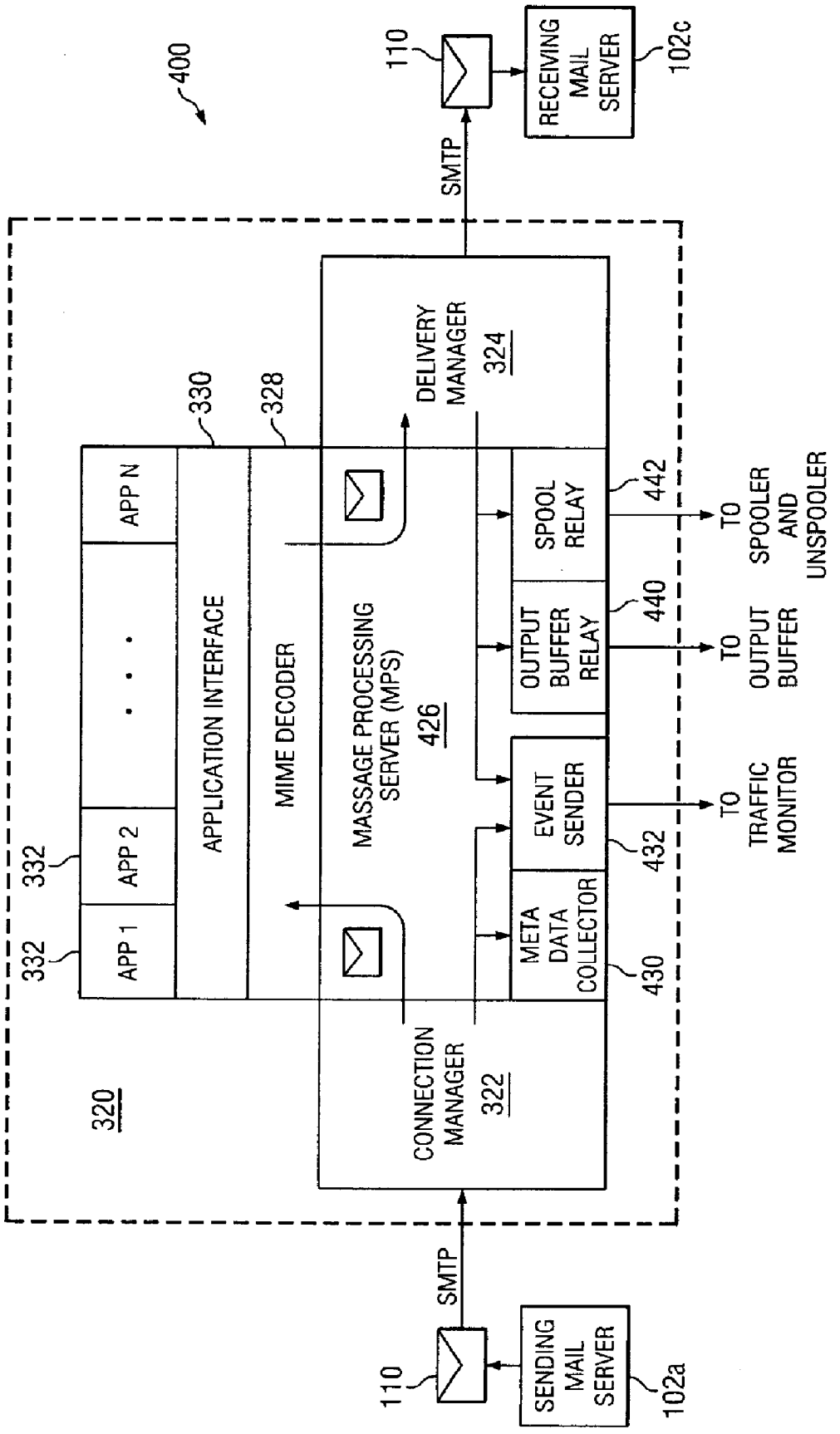
400
110
RECEIVING MAIL SERVER
102c
SMTP
DELIVERY MANAGER
324
330
328
APP N
APP 2
APP 1
332
332
APPLICATION INTERFACE
MIME DECODER
MASSAGE PROCESSING SERVER (MPS)
426
SPOOL RELAY
442
OUTPUT BUFFER RELAY
440
EVENT SENDER
432
META DATA COLLECTOR
430
TO SPOOLER AND UNSPOOLER
TO OUTPUT BUFFER
TO TRAFFIC MONITOR
CONNECTION MANAGER
322
320
SMTP
110
SENDING MAIL SERVER
102a

FIG. 4

FIG. 5

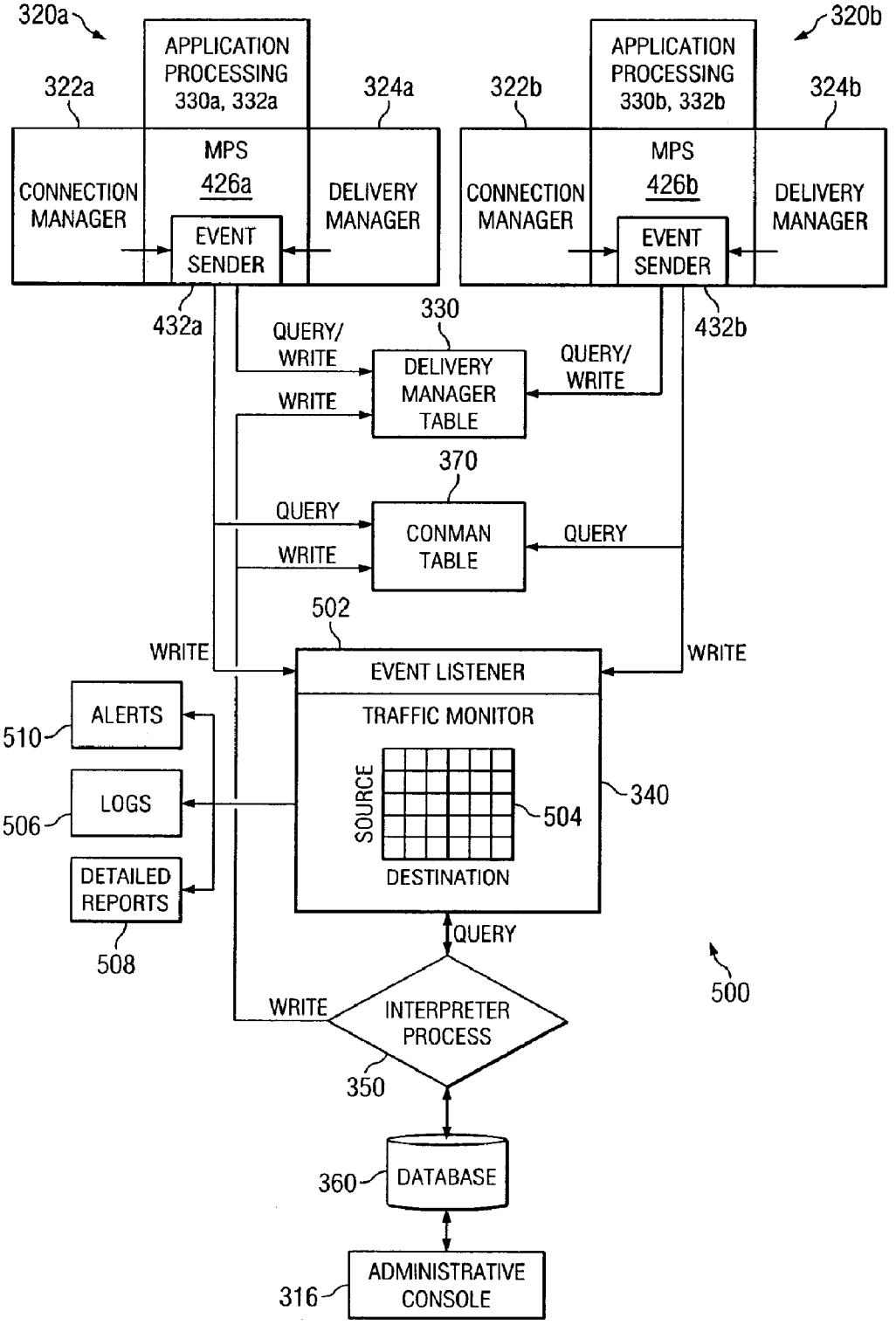
320a
APPLICATION PROCESSING 330a, 332a
322a
324a
MPS 426a
CONNECTION MANAGER
DELIVERY MANAGER
EVENT SENDER
320b
APPLICATION PROCESSING 330b, 332b
322b
324b
MPS 426b
CONNECTION MANAGER
DELIVERY MANAGER
EVENT SENDER
432a
432b
330
QUERY/ WRITE
QUERY/ WRITE
WRITE
DELIVERY MANAGER TABLE
370
QUERY
QUERY
WRITE
CONMAN TABLE
502
WRITE
WRITE
EVENT LISTENER
TRAFFIC MONITOR
SOURCE
DESTINATION
504
340
ALERTS
510
LOGS
506
DETAILED REPORTS
508
QUERY
WRITE
INTERPRETER PROCESS
350
500
360
DATABASE
316
ADMINISTRATIVE CONSOLE

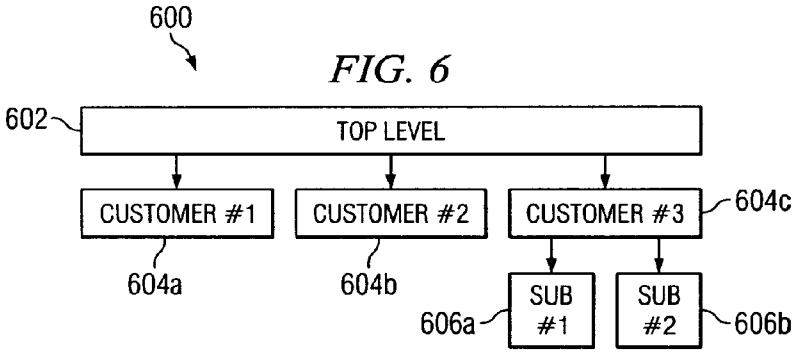
600
602
TOP LEVEL
CUSTOMER #1
CUSTOMER #2
CUSTOMER #3
604c
604a
604b
606a
SUB #1
SUB #2
606b

FIG. 6

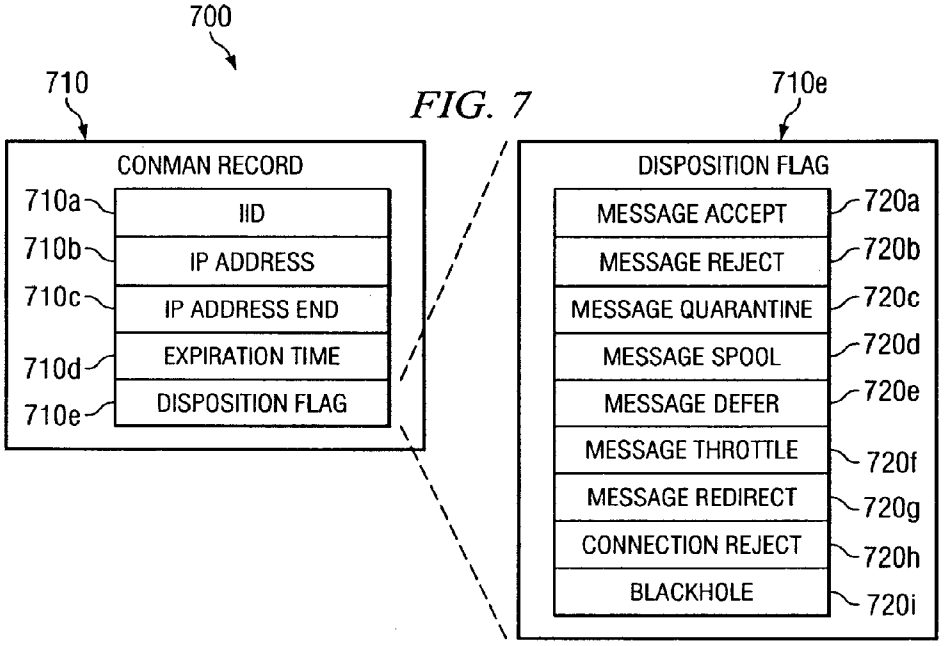
700
710
710e
CONMAN RECORD
710a
IID
710b
IP ADDRESS
710c
IP ADDRESS END
710d
EXPIRATION TIME
710e
DISPOSITION FLAG
DISPOSITION FLAG
MESSAGE ACCEPT
720a
MESSAGE REJECT
720b
MESSAGE QUARANTINE
720c
MESSAGE SPOOL
720d
MESSAGE DEFER
720e
MESSAGE THROTTLE
720f
MESSAGE REDIRECT
720g
CONNECTION REJECT
720h
BLACKHOLE
720i

FIG. 7

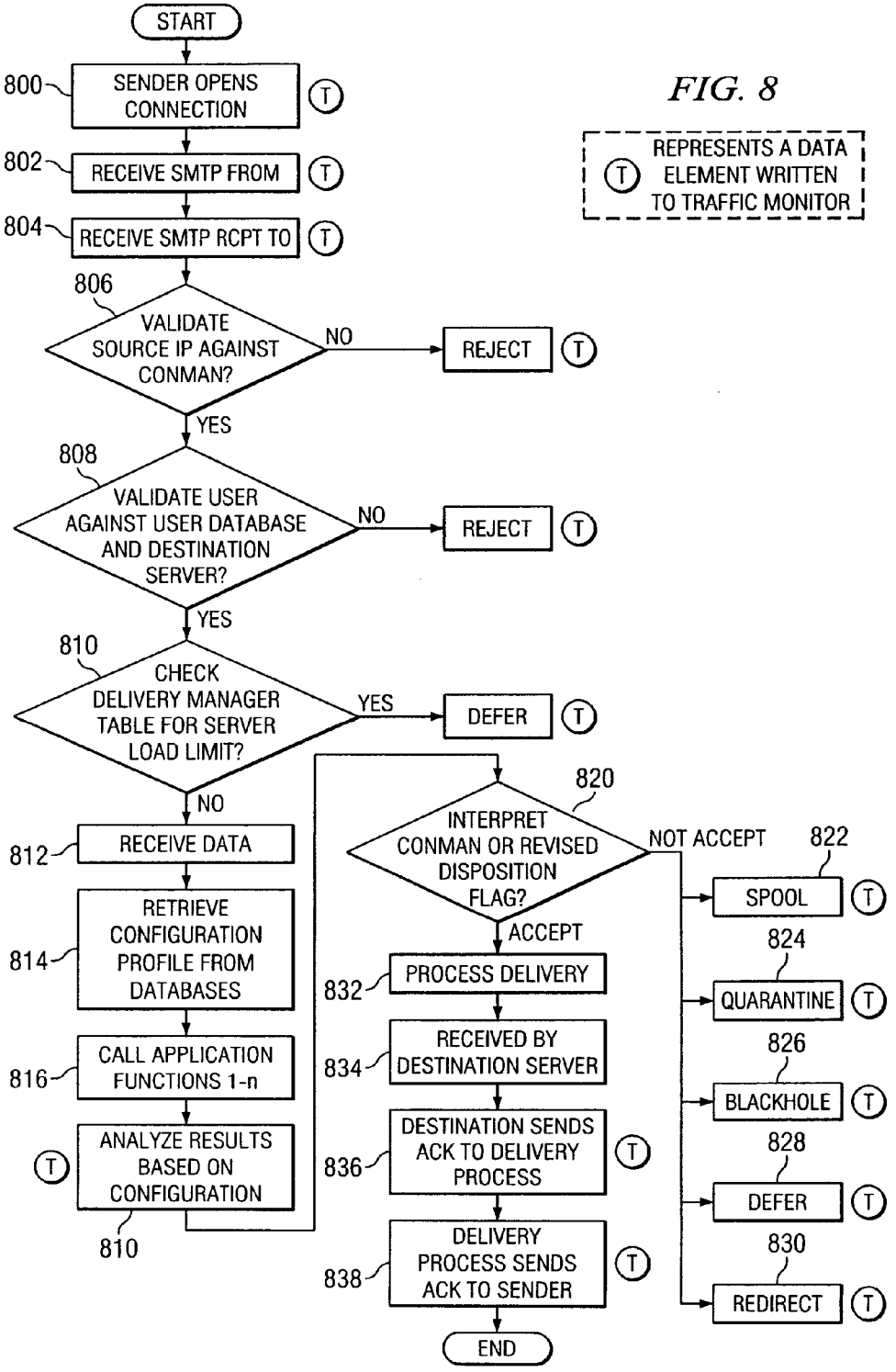

FIG. 8

T REPRESENTS A DATA ELEMENT WRITTEN TO TRAFFIC MONITOR

FIG. 9

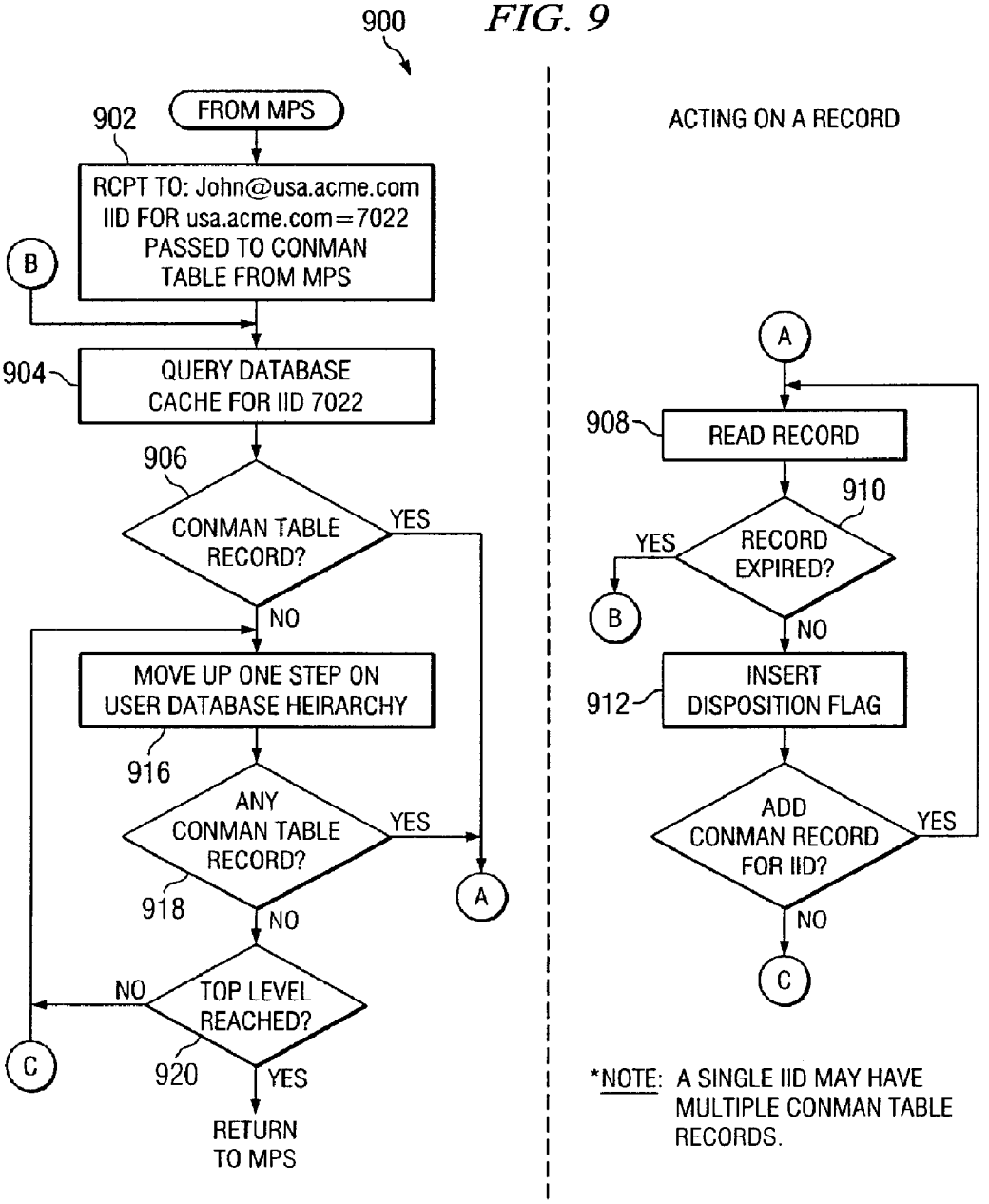
900
902
FROM MPS
RCPT TO: John@usa.acme.com
IID FOR usa.acme.com=7022
PASSED TO CONMAN
TABLE FROM MPS
B
904
QUERY DATABASE
CACHE FOR IID 7022
906
CONMAN TABLE
RECORD?
YES
NO
MOVE UP ONE STEP ON
USER DATABASE HEIRARCHY
916
ANY
CONMAN TABLE
RECORD?
YES
A
918
NO
TOP LEVEL
REACHED?
NO
C
920
YES
RETURN
TO MPS
ACTING ON A RECORD
A
908
READ RECORD
910
RECORD
EXPIRED?
YES
B
NO
912
INSERT
DISPOSITION FLAG
ADD
CONMAN RECORD
FOR IID?
YES
NO
C
*NOTE: A SINGLE IID MAY HAVE
MULTIPLE CONMAN TABLE
RECORDS.

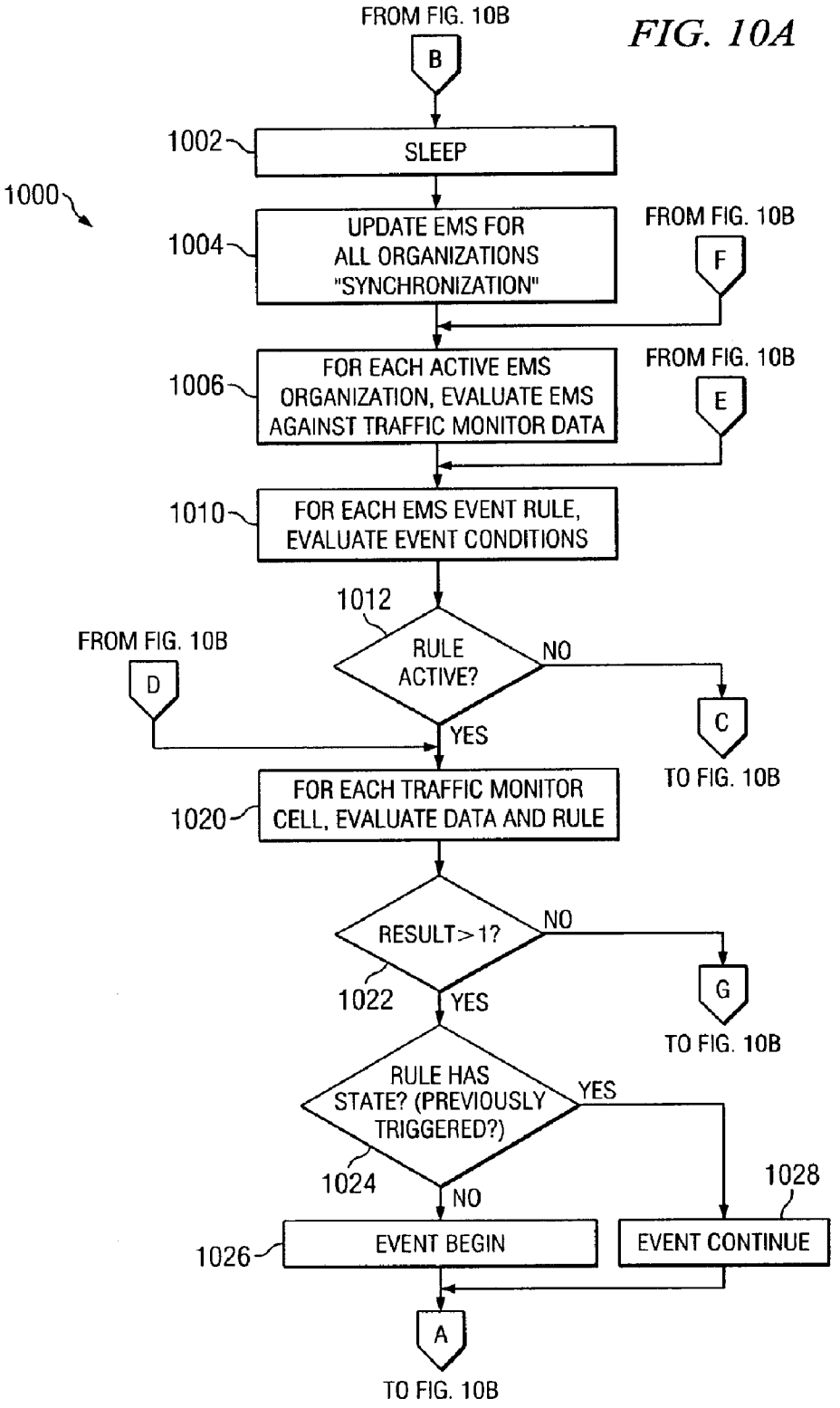
FROM FIG. 10B
B
1002
SLEEP
1000
1004
UPDATE EMS FOR ALL ORGANIZATIONS "SYNCHRONIZATION"
FROM FIG. 10B
F
1006
FOR EACH ACTIVE EMS ORGANIZATION, EVALUATE EMS AGAINST TRAFFIC MONITOR DATA
FROM FIG. 10B
E
1010
FOR EACH EMS EVENT RULE, EVALUATE EVENT CONDITIONS
1012
FROM FIG. 10B
D
RULE ACTIVE?
NO
C
TO FIG. 10B
YES
1020
FOR EACH TRAFFIC MONITOR CELL, EVALUATE DATA AND RULE
RESULT>1?
NO
G
TO FIG. 10B
1022
YES
RULE HAS STATE? (PREVIOUSLY TRIGGERED?)
YES
1028
1024
NO
1026
EVENT BEGIN
EVENT CONTINUE
A
TO FIG. 10B

FIG. 10A

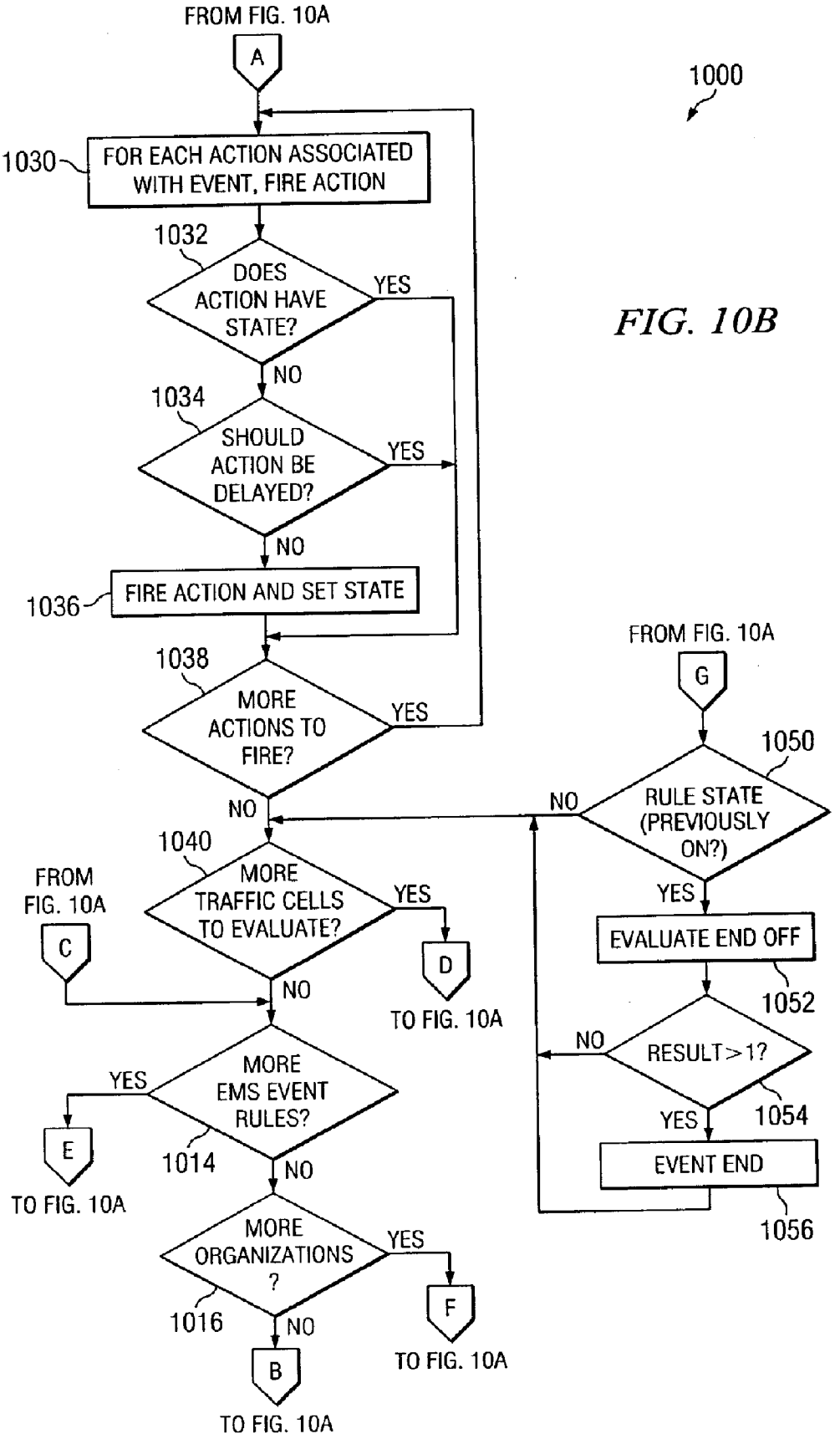
FROM FIG. 10A
A
1000
1030
FOR EACH ACTION ASSOCIATED WITH EVENT, FIRE ACTION
1032
DOES ACTION HAVE STATE?
YES
NO
1034
SHOULD ACTION BE DELAYED?
YES
NO
1036
FIRE ACTION AND SET STATE
1038
MORE ACTIONS TO FIRE?
YES
NO
1040
FROM FIG. 10A
C
MORE TRAFFIC CELLS TO EVALUATE?
YES
D
TO FIG. 10A
NO
YES
MORE EMS EVENT RULES?
E
TO FIG. 10A
1014
NO
MORE ORGANIZATIONS ?
YES
F
TO FIG. 10A
1016
NO
B
TO FIG. 10A
FROM FIG. 10A
G
1050
RULE STATE (PREVIOUSLY ON?)
NO
YES
EVALUATE END OFF
1052
RESULT>1?
NO
YES
1054
EVENT END
1056

FIG. 10B

FIG. 11

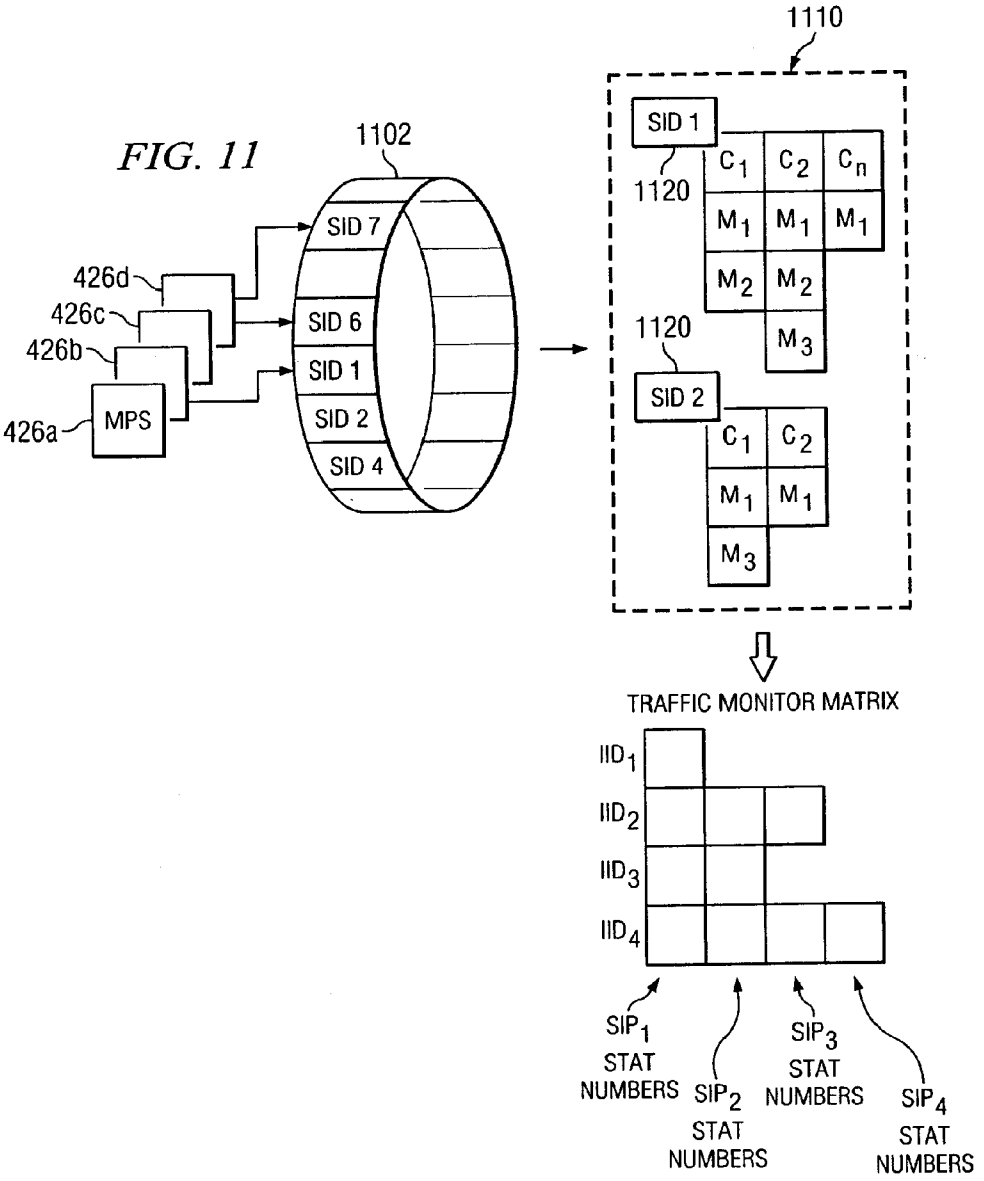
1110
1102
SID 7
SID 6
SID 1
SID 2
SID 4
426d
426c
426b
426a
MPS
SID 1
1120
C1
C2
Cn
M1
M1
M1
M2
M2
M3
1120
SID 2
C1
C2
M1
M1
M3
TRAFFIC MONITOR MATRIX
IID1
IID2
IID3
IID4
SIP1 STAT NUMBERS
SIP2 STAT NUMBERS
SIP3 STAT NUMBERS
SIP4 STAT NUMBERS

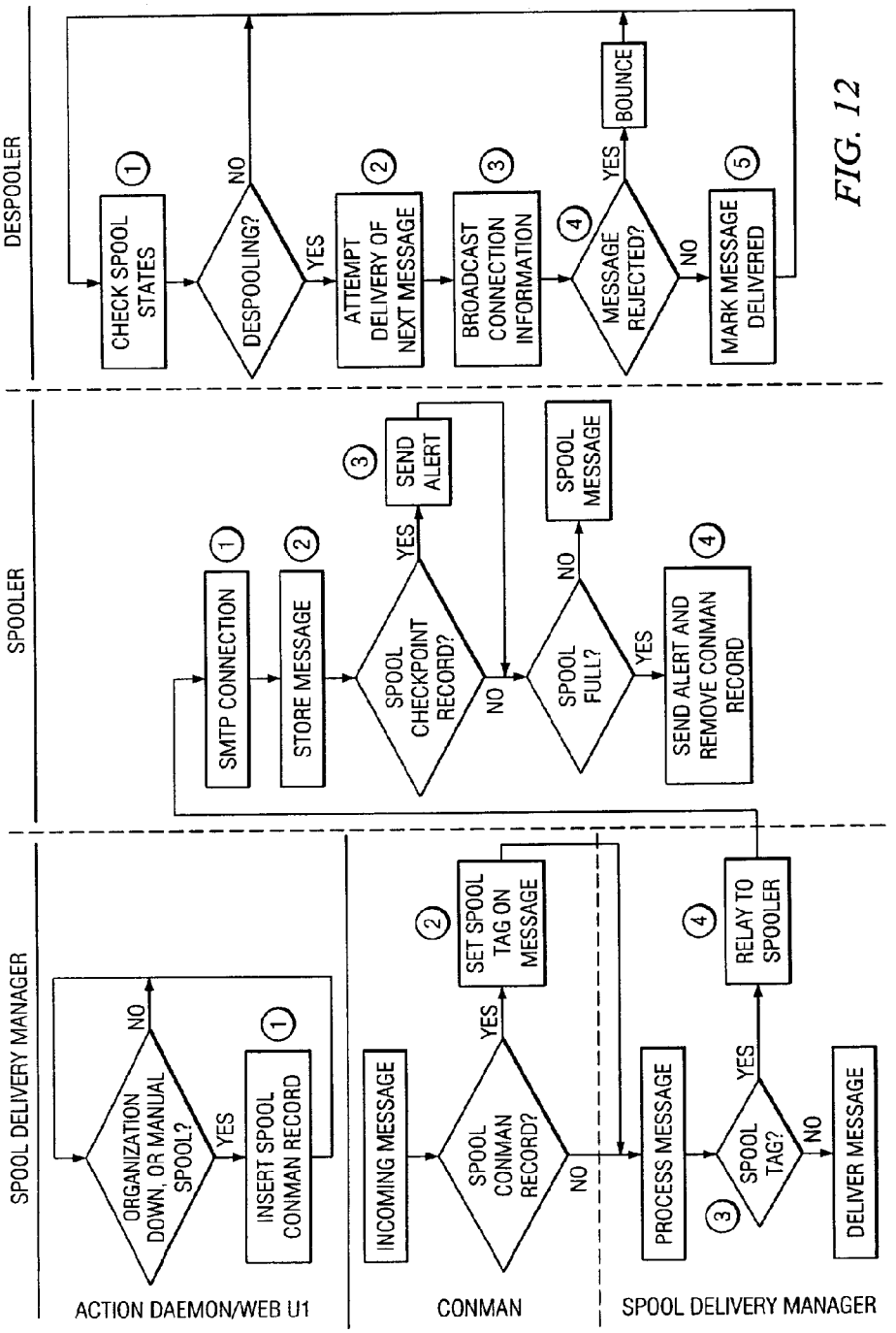
DESPOOLER
CHECK SPOOL STATES
DESPOOLING?
NO
YES
ATTEMPT DELIVERY OF NEXT MESSAGE
BROADCAST CONNECTION INFORMATION
MESSAGE REJECTED?
YES
BOUNCE
NO
MARK MESSAGE DELIVERED
SPOOLER
SMTP CONNECTION
STORE MESSAGE
SPOOL CHECKPOINT RECORD?
YES
SEND ALERT
NO
SPOOL FULL?
SPOOL MESSAGE
YES
NO
SEND ALERT AND REMOVE CONMAN RECORD
SPOOL DELIVERY MANAGER
ORGANIZATION DOWN, OR MANUAL SPOOL?
NO
YES
INSERT SPOOL CONMAN RECORD
INCOMING MESSAGE
SPOOL CONMAN RECORD?
YES
NO
SET SPOOL TAG ON MESSAGE
PROCESS MESSAGE
SPOOL TAG?
YES
NO
RELAY TO SPOOLER
DELIVER MESSAGE
ACTION DAEMON/WEB UI
CONMAN
SPOOL DELIVERY MANAGER

FIG. 12

FIG. 13

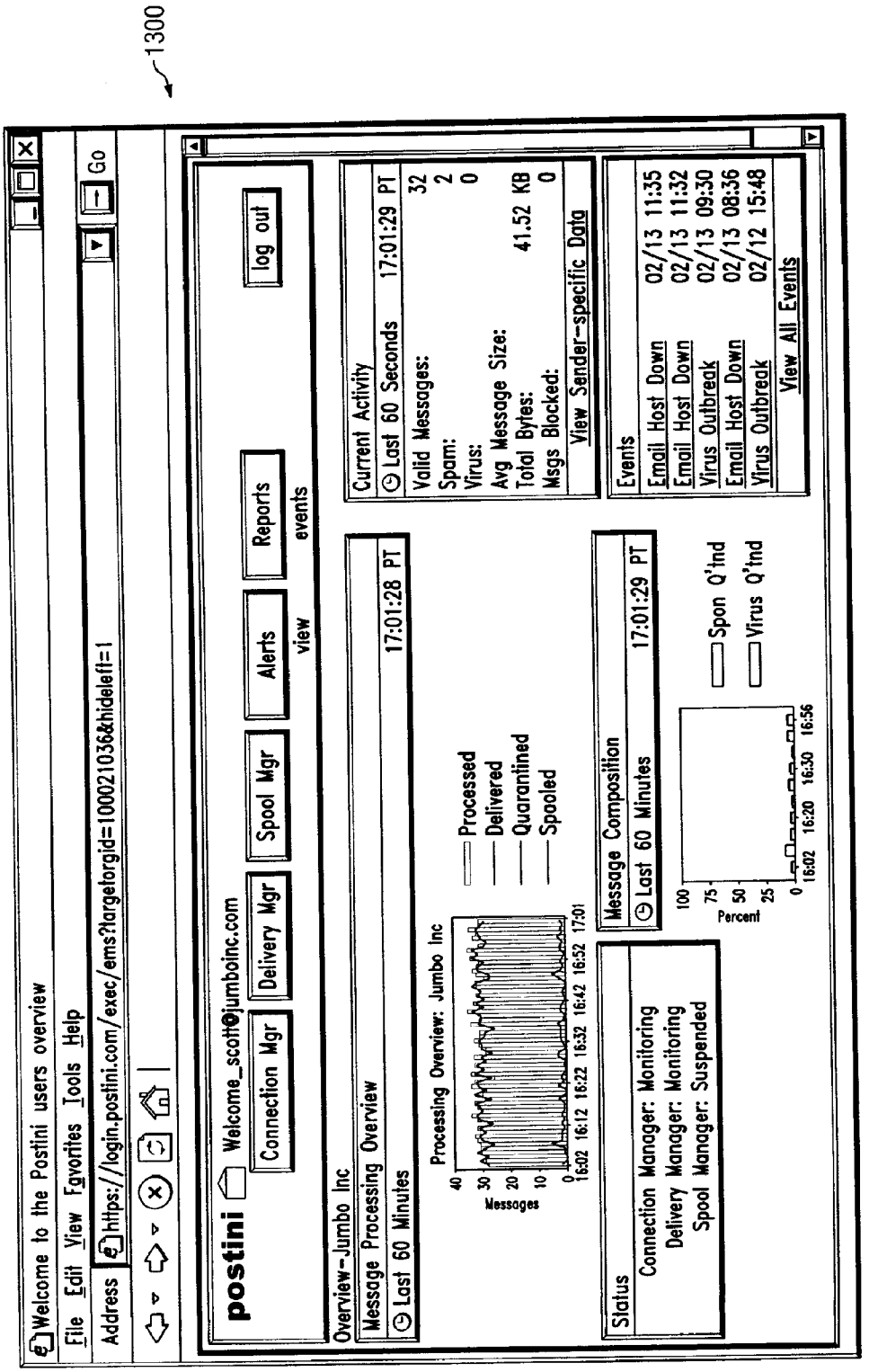
1300
Welcome to the Postini users overview
File Edit View Favorites Tools Help
Address https://login.postini.com/exec/ems?targetorgid=10002103&hideleft=1
Go
postini
Welcome_scott@jumboinc.com
Connection Mgr
Delivery Mgr
Spool Mgr
Alerts
Reports
log out
view
events
Overview-Jumbo Inc
Message Processing Overview
Last 60 Minutes
17:01:28 PT
Processing Overview: Jumbo Inc
Messages
Processed
Delivered
Quarantined
Spooled
Message Composition
Last 60 Minutes
17:01:29 PT
Percent
Spon Q'tnd
Virus Q'tnd
Status
Connection Manager: Monitoring
Delivery Manager: Monitoring
Spool Manager: Suspended
Current Activity
Last 60 Seconds
17:01:29 PT
Valid Messages: 32
Spam: 2
Virus: 0
Avg Message Size:
Total Bytes: 41.52 KB
Msgs Blocked: 0
View Sender-specific Data
Events
Email Host Down 02/13 11:35
Email Host Down 02/13 11:32
Virus Outbreak 02/13 09:30
Email Host Down 02/13 08:36
Virus Outbreak 02/12 15:48
View All Events

FIG. 14

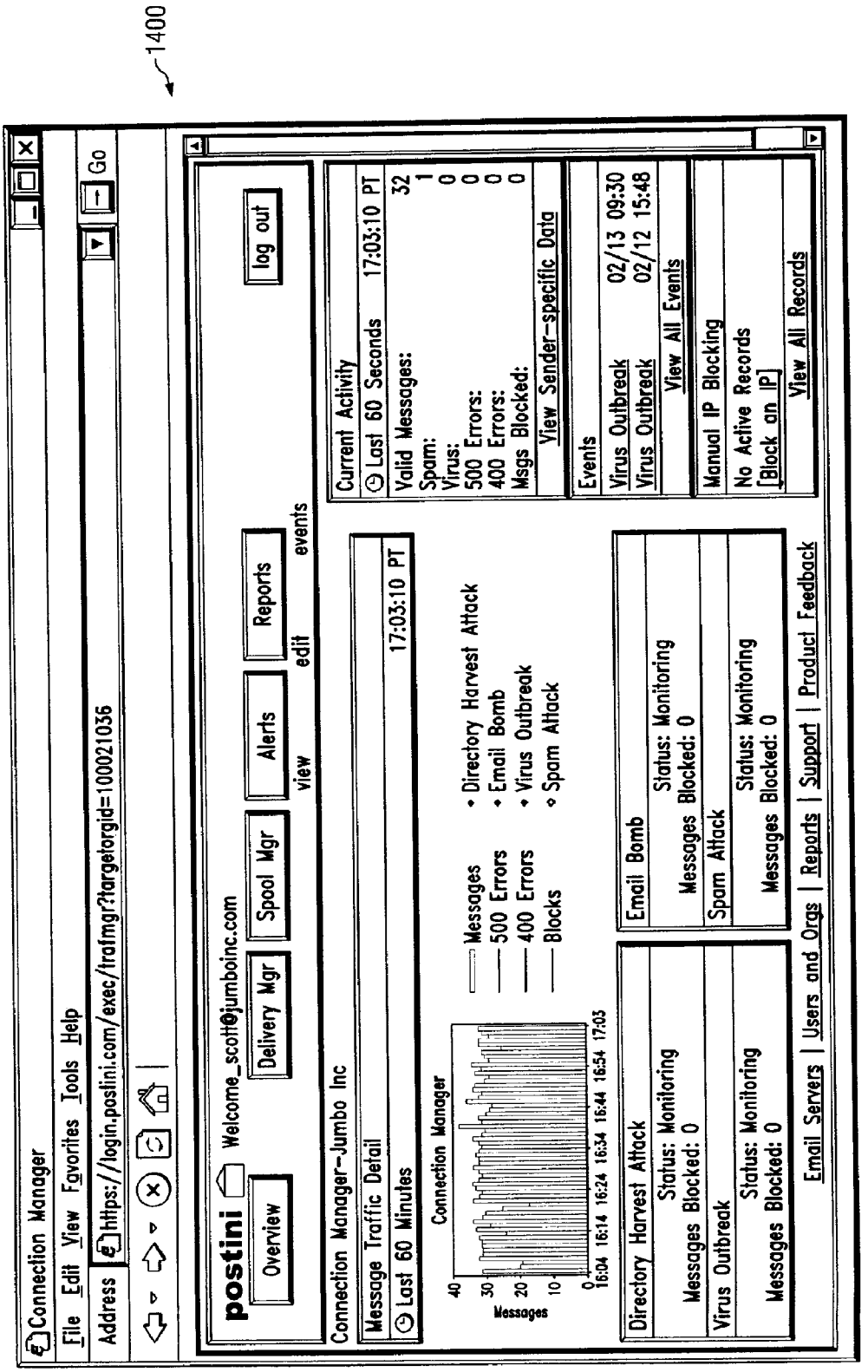
1400
Connection Manager
File Edit View Favorites Tools Help
Address https://login.postini.com/exec/tratmgr?targetorgid=100021036
Go
postini
Welcome_scott@jumboinc.com
Overview
Delivery Mgr
Spool Mgr
Alerts
Reports
log out
view edit events
Connection Manager–Jumbo Inc
Message Traffic Detail
Last 60 Minutes
17:03:10 PT
Connection Manager
Messages
500 Errors
400 Errors
Blocks
Directory Harvest Attack
Email Bomb
Virus Outbreak
Spam Attack
Messages
16:04 16:14 16:24 16:34 16:44 16:54 17:03
Directory Harvest Attack
Status: Monitoring
Messages Blocked: 0
Email Bomb
Status: Monitoring
Messages Blocked: 0
Virus Outbreak
Status: Monitoring
Messages Blocked: 0
Spam Attack
Status: Monitoring
Messages Blocked: 0
Current Activity
Last 60 Seconds
17:03:10 PT
Valid Messages: 32
Spam: 1
Virus: 0
500 Errors: 0
400 Errors: 0
Msgs Blocked: 0
View Sender-specific Data
Events
Virus Outbreak 02/13 09:30
Virus Outbreak 02/12 15:48
View All Events
Manual IP Blocking
No Active Records
[Block an IP]
View All Records
Email Servers | Users and Orgs | Reports | Support | Product Feedback

FIG. 15

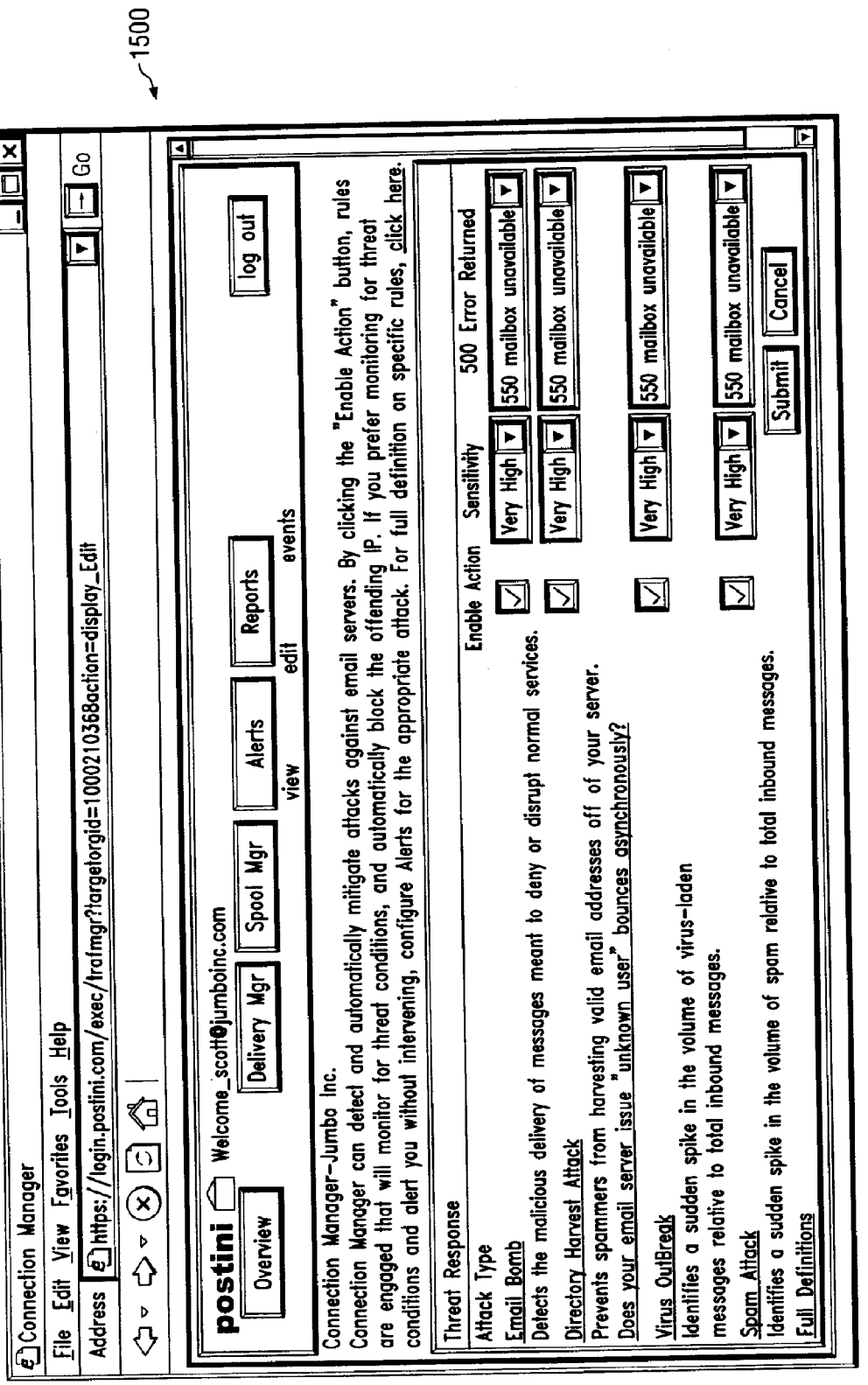
1500
Connection Manager
File Edit View Favorites Tools Help
Address https://login.postini.com/exec/traf mgr?targetorgid=10002103 68action=display_Edit
Go
postini
Welcome_scott@jumboinc.com
Overview
Delivery Mgr
Spool Mgr
Alerts
view
Reports
edit
events
log out
Connection Manager–Jumbo Inc.
Connection Manager can detect and automatically mitigate attacks against email servers. By clicking the "Enable Action" button, rules are engaged that will monitor for threat conditions, and automatically block the offending IP. If you prefer monitoring for threat conditions and alert you without intervening, configure Alerts for the appropriate attack. For full definition on specific rules, click here.
Threat Response
Attack Type
Enable Action
Sensitivity
500 Error Returned
Email Bomb
Detects the malicious delivery of messages meant to deny or disrupt normal services.
Very High
550 mailbox unavailable
Directory Harvest Attack
Prevents spammers from harvesting valid email addresses off of your server.
Does your email server issue "unknown user" bounces asynchronously?
Very High
550 mailbox unavailable
Virus OutBreak
Identifies a sudden spike in the volume of virus-laden messages relative to total inbound messages.
Very High
550 mailbox unavailable
Spam Attack
Identifies a sudden spike in the volume of spam relative to total inbound messages.
Very High
550 mailbox unavailable
Full Definitions
Submit
Cancel

FIG. 16

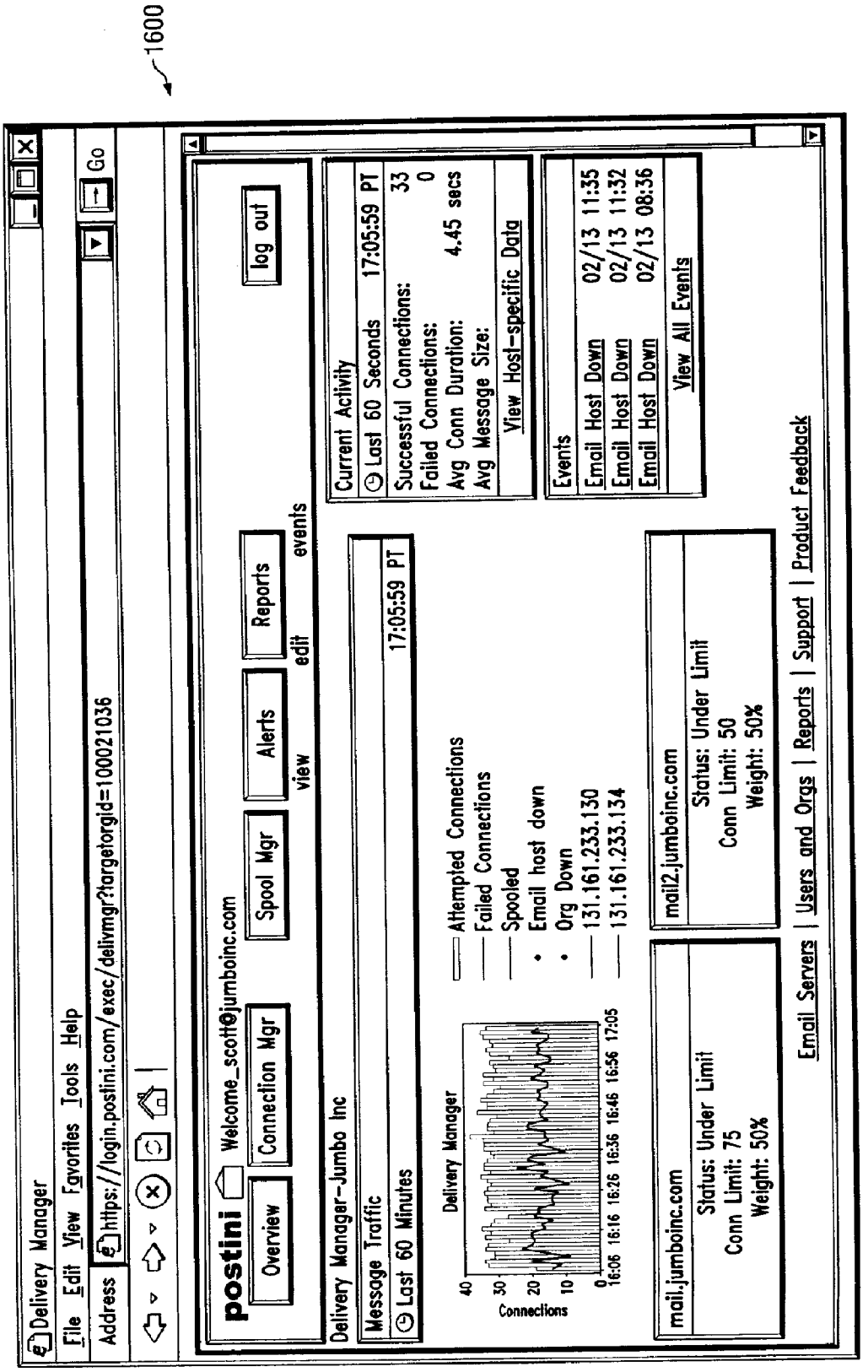
1600
Delivery Manager
File Edit View Favorites Tools Help
Address https://login.postini.com/exec/delivmgr?targetorgid=100021036
Go
postini
Welcome_scott@jumboinc.com
Overview
Connection Mgr
Spool Mgr
Alerts
Reports
log out
view
edit
events
Delivery Manager-Jumbo Inc
Message Traffic
Last 60 Minutes
17:05:59 PT
Delivery Manager
Attempted Connections
Failed Connections
Spooled
Email host down
Org Down
131.161.233.130
131.161.233.134
Connections
40
30
20
10
0
16:06 16:16 16:26 16:36 16:46 16:56 17:05
Current Activity
Last 60 Seconds 17:05:59 PT
Successful Connections: 33
Failed Connections: 0
Avg Conn Duration: 4.45 secs
Avg Message Size:
View Host-specific Data
Events
Email Host Down 02/13 11:35
Email Host Down 02/13 11:32
Email Host Down 02/13 08:36
View All Events
mail.jumboinc.com
Status: Under Limit
Conn Limit: 75
Weight: 50%
mail2.jumboinc.com
Status: Under Limit
Conn Limit: 50
Weight: 50%
Email Servers | Users and Orgs | Reports | Support | Product Feedback

FIG. 17

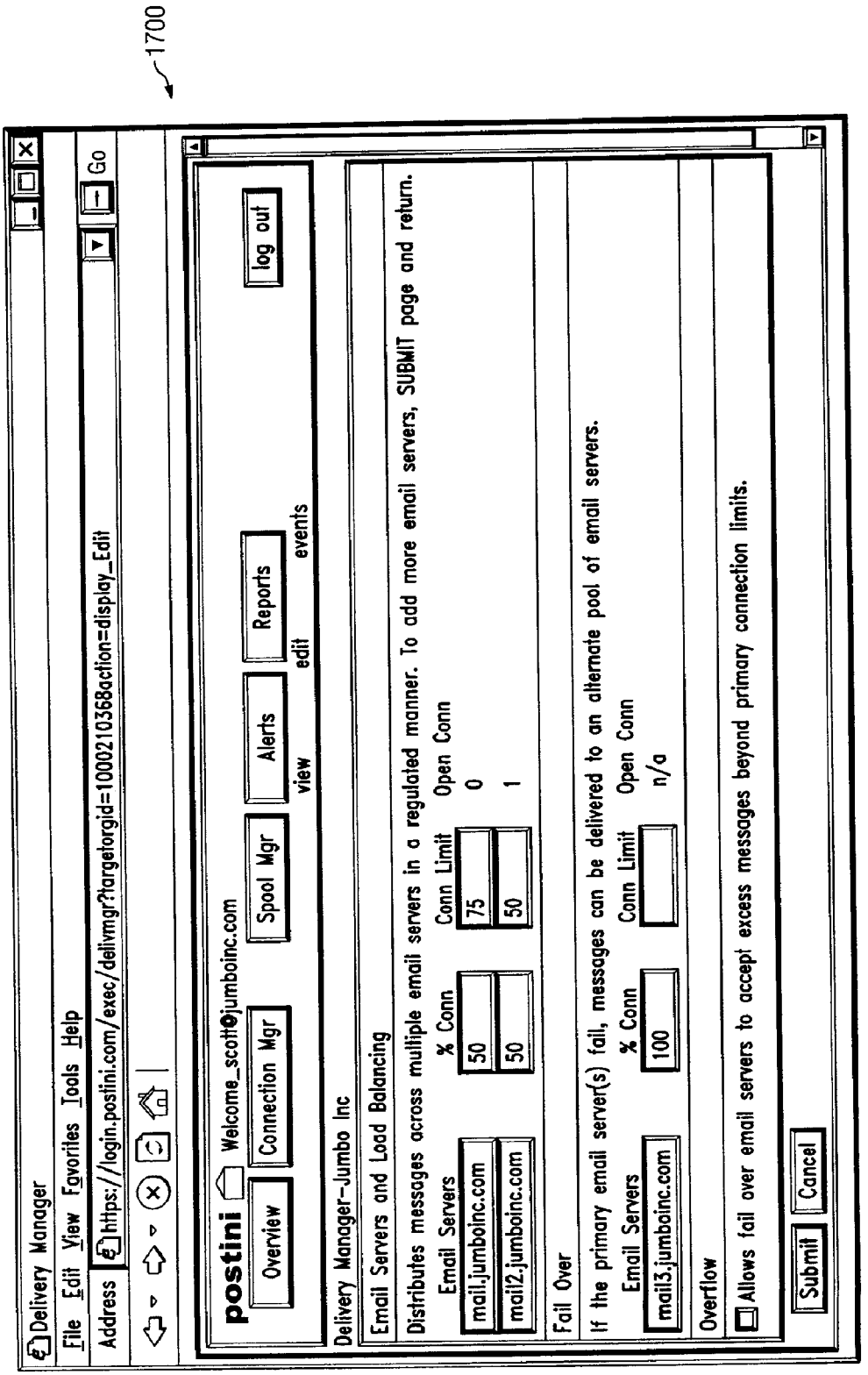
1700
Delivery Manager
File Edit View Favorites Tools Help
Address https://login.postini.com/exec/delivmgr?targetorgid=10002103688action=display_Edit
Go
postini
Welcome_scott@jumboinc.com
Overview
Connection Mgr
Spool Mgr
Alerts
Reports
log out
view
edit
events
Delivery Manager-Jumbo Inc
Email Servers and Load Balancing
Distributes messages across multiple email servers in a regulated manner. To add more email servers, SUBMIT page and return.
Email Servers
% Conn
Conn Limit
Open Conn
mail.jumboinc.com
50
75
0
mail2.jumboinc.com
50
50
1
Fail Over
If the primary email server(s) fail, messages can be delivered to an alternate pool of email servers.
Email Servers
% Conn
Conn Limit
Open Conn
mail3.jumboinc.com
100
n/a
Overflow
Allows fail over email servers to accept excess messages beyond primary connection limits.
Submit
Cancel

SYSTEMS AND METHODS FOR MANAGING THE TRANSMISSION OF ELECTRONIC MESSAGES VIA THROTTLING AND DELAYING DELIVERY

CROSS-REFERENCE

[0001] This Application is a continuation of U.S. patent application Ser. No. 10/370,118, filed Feb. 19, 2003, entitled "SYSTEMS AND METHODS FOR MANAGING THE TRANSMISSION OF ELECTRONIC MESSAGES THROUGH ACTIVE MESSAGE DATA UPDATING," which claims priority to U.S. Provisional Application Ser. No. 60/357,893, filed Feb. 19, 2002, entitled "E-MAIL MANAGEMENT SERVICES," both of which are commonly assigned with the present Application and incorporated herein by reference for all purposes.

TECHNICAL FIELD

[0002] Disclosed embodiments herein relate generally to e-mail management systems and more particularly to e-mail management systems (EMSs) employing traffic monitoring and management, and for managing and filtering electronic messages using throttling of connections and delaying delivery of messages.

BACKGROUND

[0003] E-mail management is commonly handled by ISPs that have user/subscribers or by companies that employ the e-mail users. A part of e-mail management comprises filtering for spam or virus control, but when such e-mail management is performed at the ISP or at the company server location, valuable communications bandwidth and computing resources are expended on routing, analyzing, and other handling of spurious e-mail traffic. Present e-mail management systems are further characterized by a lack of real-time monitoring, feedback, and updating of rules regarding e-mail traffic or SMTP connection situations. Management and monitoring of e-mail traffic situations is commonly handled through human intervention.

[0004] Other present systems for blocking spam or viruses include systems that populate decoy email addresses around the Internet, where the decoy email addresses act as spam collectors. Human editors then review the messages that come in, catalog them, and create a database of such junk-mail messages and their checksums. The created database is then promulgated to subscribers of the service, and each message received at the customer premises is checked against the virus/spam database. Again, in this instance, the detection and monitoring of the Internet for new virus and spam messages is not in real time, and the customer premise mail server must still receive all of the spurious e-mails and then analyze all the incoming emails to see whether there is a match in the database.

SUMMARY

[0005] To address the above-discussed deficiencies of the prior art, the present invention provides, in one aspect, a traffic monitor for use with a computer process in managing the transmission of electronic messages from sending mail servers to receiving mail servers, wherein messages sent from the sending mail servers comprise source data associated with the sending mail servers and destination data associated with the receiving mail servers. In one embodiment, the traffic monitor includes a data matrix for storing the source and destination data for a plurality of incoming electronic messages, and an interface coupled to the matrix. In this embodiment, the interface is configured to facilitate supplementing of the source and destination data with metadata provided by the computer process and based on the plurality of electronic messages, and to facilitate access to the source and destination data and the metadata for use in processing the plurality of electronic messages.

[0006] In another aspect, the present invention provides a method for use with a computer process in managing the transmission of electronic messages from sending mail servers to receiving mail servers, wherein messages sent from the sending mail servers comprise source data associated with the sending mail servers and destination data associated with the receiving mail servers. In one embodiment, the method includes collecting and storing in real time, without completing the connection process, the source and destination data for a plurality of incoming electronic messages, and supplementing the source and destination data with metadata provided by the computer process and based on the plurality of electronic messages. In addition, the method includes analyzing and processing in the computer process the plurality of electronic messages based on the source and destination data and the metadata.

[0007] In a further aspect, the present invention provides an electronic message management system (EMS) for use in managing the transmission of electronic messages from sending mail servers to receiving mail servers, wherein messages sent from the sending mail servers comprise source data associated with the sending mail servers and destination data associated with the receiving mail servers. In one embodiment, the EMS includes a traffic monitor having a data matrix for storing the source and destination data for a plurality of incoming electronic messages, and an interface for facilitating access to the data matrix. Also, the EMS includes a message handling process coupled to the interface and configured to supplement the source and destination data with metadata extrapolated from the plurality of electronic messages. In this embodiment, the EMS still further includes an interpreter process coupled to the interface and configured to access the source and destination data and the metadata to generate processing instructions based thereon. In such an embodiment, the message handling process is further configured to process the plurality of electronic messages based on the processing instructions.

[0008] In another aspect, the present invention provides a method for managing the transmission of electronic messages from sending mail servers to receiving mail servers, wherein messages sent from the sending mail servers comprise source data associated with the sending mail servers and destination data associated with the receiving mail servers. In one embodiment, the method includes storing the source and destination data for a plurality of incoming electronic messages in a data matrix, and extrapolating metadata from the plurality of electronic messages. In addition, the method includes supplementing the source and destination data with the metadata, and accessing the source and destination data and the metadata via an interface. The method also includes generating processing instructions based on the source and destination data and the metadata, and processing the plurality of electronic messages based on the processing instructions.

[0009] In still a further embodiment, the present invention provides an EMS for use in managing the transmission of electronic messages from sending mail servers to receiving mail servers. In one embodiment, the EMS includes a connection management module configured to extract source data associated with the sending mail servers and destination data associated with the receiving mail servers from a plurality of incoming electronic messages. In addition, the EMS includes a data matrix for storing the source and destination data, and an interface coupled between the data matrix and the connection management module. In such an embodiment, the interface is configured to facilitate supplementing of the source and destination data with metadata extrapolated from the plurality of incoming electronic messages, and to facilitate access to the source and destination data and the metadata. In such an embodiment, the connection management module is further configured to accept any of the plurality of incoming electronic messages from the sending mail servers based on the source and destination data and the metadata.

[0010] In a further embodiment, the present invention provides a method for managing the transmission of electronic messages from sending mail servers to receiving mail servers. In one embodiment, the method includes extracting source data associated with the sending mail servers and destination data associated with the receiving mail servers from a plurality of incoming electronic messages. The method also includes supplementing the source and destination data with metadata extrapolated from the plurality of electronic messages, and accepting any of the plurality of electronic messages from the sending mail servers based on the source and destination data and the metadata.

[0011] In yet a further embodiment, the present invention provides an EMS for use in managing the transmission of electronic messages from sending mail servers to receiving mail servers. In one embodiment, the EMS includes a data matrix for storing source data associated with the sending mail servers and destination data associated with the receiving mail servers for a plurality of incoming electronic messages. The EMS also includes an interface coupled to the data matrix and configured to facilitate supplementing of the source and destination data with metadata extrapolated from the plurality of electronic messages, and to facilitate access to the source and destination data and the metadata. In this embodiment, the EMS still further includes a delivery management module coupled to the interface and configured to deliver any of the plurality of incoming electronic messages to the receiving mail servers based on the source and destination data and the metadata.

[0012] In yet another embodiment, the present invention provides a method for managing the transmission of electronic messages from sending mail servers to receiving mail servers. In one embodiment, the method includes storing source data associated with the sending mail servers and destination data associated with the receiving mail servers from a plurality of incoming electronic messages. The method also includes supplementing the source and destination data with metadata extrapolated from the plurality of electronic messages. In such an embodiment, the method further includes delivering any of the plurality of electronic messages to the receiving mail servers based on the source and destination data and the metadata.

[0013] The foregoing has outlined preferred and alternative features of the present invention so that those skilled in the art may better understand the detailed description of the invention that follows. Additional features of the invention will be described hereinafter that form the subject of the claims of the invention. Those skilled in the art should appreciate that they can readily use the disclosed conception and specific embodiments as a basis for designing or modifying other structures for carrying out the same purposes of the present invention. Those skilled in the art should also realize that such equivalent constructions do not depart from the spirit and scope of the present invention.

BRIEF DESCRIPTION OF THE DRAWINGS

[0014] For a more complete understanding of the present invention, reference is now made to the following detailed description taken in conjunction with the accompanying drawings. It is emphasized that various features may not be drawn to scale. In fact, the dimensions of various features may be arbitrarily increased or reduced for clarity of discussion. In addition, it is emphasized that some components may not be illustrated for clarity of discussion. Reference is now made to the following descriptions taken in conjunction with the accompanying drawings, in which:

[0015] **FIG. 1** is a general block diagram generally describing e-mail delivery over the Internet;

[0016] **FIG. 2** is a block diagram illustrating possible placements of an active E-Mail Management System in the Internet e-mail delivery path;

[0017] **FIG. 3** is a block diagram showing in more detail the architecture and placement in an e-mail delivery network of an electronic message E-mail management system;

[0018] **FIG. 4** is a more-focused block diagram of a message handling computer process, focusing on some of the elements of an EMS, and showing a possible routing of e-mail messages through this portion of the EMS;

[0019] **FIG. 5** is an overview of an EMS in which multiple message handling computer processes are connected to a single traffic monitor and its associated interpreter process;

[0020] **FIG. 6** is a block diagram illustrating one embodiment for a hierarchical division of email management functions to be applied to destination IP addresses that may be managed with an EMS constructed according to the principles disclosed herein;

[0021] **FIG. 7** is a database structure forming a connection management table that can be used by the connection manager to act on events in connection with a predetermined hierarchy;

[0022] **FIG. 8** is a flowchart illustrating a method for managing the transmission of electronic messages, including writing data to and receiving instructions from components of the EMS;

[0023] **FIG. 9** is a flowchart illustrating the process flow for assigning control instructions based on a sending IP address, and configuration parameters for the particular recipient in the organizational hierarchy managed by the EMS;

[0024] **FIG. 10** is a flowchart illustrating the process flow for the Interpreter process resource within an EMS;

[0025] **FIG. 11** graphically illustrates data structures that can be employed in the described embodiments for real-time traffic monitoring;

[0026] **FIG. 12** is a flowchart illustrating the process flow for a Spool Delivery resource for the described embodiments;

[0027] **FIG. 13** is a screen shot of an example access page for an administrative console for use with an EMS according to the present invention;

[0028] **FIG. 14** is a screen shot of an example page for monitoring and configuring a connection manager used in an EMS according to the present invention;

[0029] **FIG. 15** is a screen shot of another example page for a connection manager used in an EMS;

[0030] **FIG. 16** is a screen shot of an example page for monitoring and configuring a delivery manager used in an EMS according to the present invention;

[0031] **FIG. 17** is a screen shot of another example page for a delivery manager used in an EMS.

DESCRIPTION OF THE EMBODIMENTS

[0032] Referring initially to **FIG. 1**, illustrated is a prior art system **100** for the delivery of e-mail messages through the Internet **101** or other computer network. Sending mail servers **102***a*, **102***b* (having associated source Internet protocol (IP) addresses) and receiving mail servers **102***c*, **102***d* (having associated destination IP addresses), or other message gateways, allow electronic messages, such as electronic mails (or "e-mails") to be delivered to and from sending client machines **104***a*-**104***d* to receiving client machines **104***e*-**104***h*, or other devices such as cell phones, pagers, and/or hand-held computers. In accordance with conventional systems, the transmission direction of the e-mails may also be reversed, where the sending machines and servers become the receiving machines and servers and vice versa.

[0033] E-mail messages are typically composed by an application running on a client machine **104**. When composition of the message is completed, the user uploads the completed message to a mail server **102**. The mail server **102** in one embodiment is owned by an Internet Service Provider (ISP) or by a private corporation for whom the user works. The user client machine **104** connects to the mail server **102** via dial-up, digital subscriber loop (DSL), cable Internet, or by other appropriate means. One standard for e-mail formats is described by RFC 822 obsoleted by RFC2822, which are a standard and a proposed standard, respectively, promulgated by Internet Engineering Task Force ("IEFF"). The protocol by which e-mail messages are transmitted from sending mail server **102** to receiving mail server **102** are described by RFC821, obsoleted by RFC 2821, which are also a standard and a proposed standard, respectively, of the IEFF. These standards can be found at www.ietf.org. The present disclosure hereby incorporates by reference the subject matter of the RFC 821 and RFC 822 standards and the RFC 2821 and RFC2822 proposed standards. If the proposed standards are updated from the versions published in April 2001, it is the subject matter of the April 2001 versions of these proposed standards that is hereby incorporated by reference. The RFC 821 and RFC 2821 documents describe a Simple Mail Transport Protocol ("SMTP"), which is the protocol by which e-mail messages have typically been transported over the Internet.

[0034] SMTP servers and SMTP clients (SMTP clients are network computers, not to be confused with the client machines **104**) provide a mail transport service, and therefore act as Mail Transfer Agents ("MTAs"). Mail User Agents ("MUAs" or "UAs") are normally thought of as the sources and targets of mail. At the source, an MUA might be the source mail server **102***a*, **102***b* that collects mail to be transmitted from a user and hands it off to an MTA within the network **101**. The final ("delivery") MTA would be thought of as handing the mail off to an MUA, which might be the destination mail server **102***c*, **102***d* that holds a user's mail in the user's inbox.

[0035] The SMTP mail transport protocol uses domain names to route messages from a sender to a receiver of e-mail. A distributed database of TCP/IP addresses corresponding to particular domain names is maintained across the Internet **101** in Domain Name Servers ("DNSs") **108**. Thus, to route an e-mail to its destination, the source mail servers **102***a*, **102***b* would generally take the address specified by the sending user and inquire of a DNS server **108** the IP address to be assigned to the particular addressed domain name. As used in this specification, an "address" is a character string that identifies a user to whom mail will be sent, a user or source that is sending mail, or a location into which mail will be deposited. The term "mailbox" refers to that depository. The two terms are typically used interchangeably unless the distinction between the location in which mail is placed (the mailbox) and a reference to it (the address) is important. An address normally consists of user and domain specifications; however, addresses may have different forms depending on usage and type of address. The standard mailbox naming convention is defined to be "local-part@domain"; contemporary usage permits a much broader set of applications than simple "user names". The local part of the address is typically interpreted and assigned semantics only by the host specified in the domain part of the address. In contrast, the standard Internet Protocol (IP) address is typically a specific string of numbers identifying a source or destination server.

[0036] Once the source mail server **102***a*, **102***b* lexically identifies a domain to which email will be delivered for processing, a DNS lookup, through a DNS server **108**, is performed to resolve the domain name. The email **110** is then sent from the source mail server **102***a*, **102***b* via the Internet **101** to the identified domain.

[0037] Turning now to **FIG. 2**, illustrated is a block diagram **200** of an embodiment in which an active Electronic Message (e.g., E-Mail) Management System (EMS) **203** is provided between Internet **101** and receiving mail server **202**. The EMS **203** of the present invention is "active" and automated since it is constantly managing attempted transmissions of electronic messages without the need for human intervention at various steps of the management process. In this sense, an EMS **203** according to the principles disclosed herein is automated, and configured to manage message delivery in real-time. The EMS system is able to interpret conditions, analyze patterns, and manage the delivery of data to the receiving server **202** by performing processing steps as each of the SMTP connection between the sender and recipient are processed. Traditional

e-mail servers will typically accept the message data and write the message to disk prior to performing analysis. The EMS **203** is able to perform management steps at each stage of the SMTP transaction in order to minimize impact on the destination server **202**, while providing security and management. So that mail intended for the mail server **202**, and thus the receiving client's terminal **204**, is routed through the EMS **203**, the numerical IP address in the DNS **108** that is associated with the domain name of the targeted mail server **202** is updated to reflect the numerical address of the EMS **203**. For example, suppose the domain name of the mail server **202** is "anywhere.com" and the numerical IP addresses for the mail server **202** and EMS **203** were "1234.5678.9876.5432" and "9876.5432.1234.5768," respectively. Then the records in the distributed DNS database **108** for "anywhere.com" would be updated to reflect the EMS's numerical address "9876.5432.1234.5768," rather than "1234.5678.9876.5432."

[**0038**] Although this figure shows the EMS **203** as being physically adjacent to the mail server **202**, such placement is only for illustration purposes. The EMS **203** can be located anywhere on the Internet **101**. It can also be located either outside or within the mail server's **202** associated firewall **210**, as shown by the optional positioning of the firewall **210** at position "A" (outside the firewall) or at position "B" (inside the firewall). Alternatively, the EMS **203** could possibly run on the same physical machine as the mail server **202**.

[**0039**] Looking now at **FIG. 3**, illustrated is a more detailed diagram, including a block diagram **300** of the EMS **203**. An administrative console web page **316** (including its admin module **318**), may be located on the same particular server machine as the actual EMS system **203** for providing an administrative access tool to assist in configuring how the EMS **203** processes incoming electronic messages. The connections between the EMS **203** and the mail servers **102***a*, **102***c* may be made through Internet or SMTP connections. As previously mentioned, the EMS **203** could exist inside or outside a particular firewall with or without one of the mail servers **102***a*, **102***c*.

[**0040**] Generally, the system shown in **FIG. 3** handles mail from a "sending" mail server **102***a*. The designation of one mail server as a "sender" and the other as a "receiver" is arbitrary. Practically speaking, both mail servers **102***a*, **102***c* will generally act as both sender and receiver of electronic messages from and to the mail servers' **102***a*, **102***c* sending and receiving clients **104***a*, **104***e*. In the embodiment shown, at least one of the mail servers' **102***a*, **102***c* domain names will be associated with the EMS **203** in the DNS distributed database and its servers **108**. In embodiments employing the administrative console **316**, the console **316** receives information from the EMS **203** regarding the types of electronic messages which are coming in for particular users or groups of users, such as information regarding the suspected viruses and spam e-mails, directory harvest attacks, or unwanted content or delivery attempts that have been sent to the user or users. It is the administrative console **316** that is employed to configure the parameters of filtering to be applied by the EMS **203** for that user or organization. The administrative console **316** receives information from the EMS **203** regarding traffic patterns on the system, such as an inordinate number of e-mails being sent from a certain domain or other suspicious traffic patterns. The administrative console **316** may be a web-based application having an "admin" software module **318** running on a web server or optionally on the same intermediate platform as the EMS **203**.

[**0041**] The EMS **203** is shown in **FIG. 3** as including a message handling computer process **320** having a number of interconnected software modules. The layout of these various software modules in the message handling process **320** is not indicative of any particular physical structure in the machine running these software modules. One module included within the process **320** is a connection management module, or simply a connection manager **322**. The connection manager **322** is responsible for setting up and monitoring incoming SMTP connections from UAs/mail servers **102***a* (or Mail Transfer Agents). The connection manager **322** is the entry point to the EMS **203**, and it monitors the incoming SMTP connection attempts and e-mail messages. The process **320** is further connected to a traffic monitor **340**, which collects incoming SMTP connection data, message metadata, and message delivery information.

[**0042**] An interpreter process **350**, which may be a particular type of software daemon, is further provided. The interpreter process **350** interacts with the data in the traffic monitor **340** to recognize patterns of messages within the traffic of messages that can be acted upon. More specifically, the connection manager **322**, the email handler **326**, the applications **332***s*, and a delivery management module (or simply a delivery manager **324**), all comprising portions of the process **320**, write source and destination data, as well as metadata, to the traffic monitor **340** during the processing of incoming messages. The source and destination data is comprised of source data associated with the sending mail server **102***a*, and destination data associated with the receiving mail server **104***e*. The metadata is extrapolated from the electronic messages by the process **320** using the applications **332**, which are program threads for detecting unwanted messages, such as specific messages as defined by content type or size. Table 1 sets forth more detailed examples of metadata generated by the EMS **203**, but the list is not intended to be exclusive.

TABLE 1

frontConnections	The number of times that the source IP address has connected to the targeted organization in the last 60 seconds
openFrontConnections	The number of connections from this IP address to the organization currently open
backConnections	The number of times EMS has connected to the mailserver for the organization on behalf of this source IP address in the last 60 seconds

TABLE 1-continued

openBackConnections	As with openFrontConnections
backendFailed	Like backConnections, but records the number of failed connection attempts (used to detect down mail server)
numMessages	The number of messages which have been sent from the source IP address to users in this organization
numSpam	As above, but the number quarantined as spam
numVirus	As above, but the number quarantined as having a virus
conBlock, conBlackhole, conSpool, conQtine	The number of messages for which conman dispositions of block (bounce), blackhole, spool, and quarantine have been applied for the source IP address/organization pair
size	Message size, in bytes; mean and standard deviation
frontDuration	Duration of inbound connections; mean and standard deviation
backDuration	Duration of outbound connections; mean and standard deviation
numRecipients	The number of recipients on messages; mean and standard deviation
Errors4	400-class errors between source IP address/organization
Errors5	500-class errors between source IP address/organization
summary per org	The sum of traffic from all inbound IP addresses
summary record per org/mailhost	Record of when individual destination mailhosts go down
numAttachment	The number of messages from the source IP address with unwanted attachments
numContent	The number of messages from the source IP address with unwanted content
numDeferred	The number of temporary deferral errors from the destination IP address
numUnknown	The number of unknown user errors from the destination IP address

[0043] To determine patterns with the electronic messages, or even behavior of the user sending the messages, the interpreter process **350** analyzes both the source and destination data and the metadata written into the traffic monitor **340**. For example, when a large number of messages are coming in from the same outside UA mail server **102***a*, this might be indicative of a spam attack or other denial of service or unwanted delivery activity. The interpreter process **350** may notice such trends through patterns of the source and destination data and the metadata stored in the traffic monitor **340**, and initiate actions in the mail handler **326** to block the offending e-mails. In an advantageous embodiment, the interpreter process **350** is a specific software daemon created for such tasks, but the present invention is not limited to any particular embodiment. Examples of other patterns or conditions that the interpreter process **350** may detect based on the source and destination data and the metadata include, but are not limited to:

[0044] Directory harvest attack detection, where a statistically significant percentage of delivery attempts are directed to invalid users with the intent of compiling a list of valid addresses on the server.

[0045] Email Bomb detection, where the same or similar message is delivered repeatedly to the same user or group of users.

[0046] Spam Attacks, where a significant percentage of the data being sent from a source IP address is spam or otherwise unwanted e-mails.

[0047] Virus Attacks where a significant percentage of the data being sent from a source IP address is virus-infected.

[0048] Denial of Service connection requests, where a sending IP address is repeatedly connecting and holding the connection open or not delivering meaningful data.

[0049] Unresponsive customer servers, where connection attempts fail and messages should be redirected or spooled.

[0050] At-capacity customer servers, where the customer server is at threshold capacity and should not receive additional messages.

[0051] Idle customer servers, where the idle customer servers may have unused capacity and are able to accept more messages.

[0052] Next server, where the next e-mail server in the allocated rotation of recipient servers should receive the next message.

[0053] Busy customer servers, where the customer server is returning a deferral error suggesting that it is unable to process requests.

[0054] A database **360** is also provided in this embodiment to log the actions of the interpreter process **350** and/or the information about the filtered e-mail, and to store configuration parameters for applying message processing actions based on patterns recognized in the traffic monitor **340**. The administrative console **316** has access to the database **360** and, in turn, to the interpreter process **350**, whereby the actions taken can be reviewed and the system can be configured with regard to the actions to be taken in certain types of circumstances.

[0055] Conceptually, at the other side of the process **320** is a delivery manager **324**, which has the ability to know, in real time, the state of receiving UA mail servers **102***c* to

which the EMS **203** is sending messages. Between the connection manager **322** and the delivery manager **324** is the mail handler **326**, which manages the overall processes within the EMS **203**. The mail handler **326** is conceptually connected to a Multipurpose Internet Mail Extensions (MIME) decoder **328** and to an application interface **330**. The application interface **330** provides an interface between the mail handler **326** and applications **332**, which will assist in writing information to the traffic monitor **340**, which becomes the basis for the metadata.

[**0056**] Following a configuration established by rules stored in the database **360**, the interpreter process **350** will interpret patterns in the data stored in the traffic monitor **340**, as described above, and update records in a connection management table (conman table) **370**. The conman table **370** stores this message processing information, typically in the form of disposition instructions, which regulate how the connection and delivery for incoming messages and for specific source IP addresses are to be processed. Examples of disposition instructions, appearing in the way of disposition flags in the records of the conman table **370**, include, but are not limited to:

[**0057**] message accept

[**0058**] message reject

[**0059**] message quarantine

[**0060**] message spool

[**0061**] message defer

[**0062**] message throttle

[**0063**] message redirect

[**0064**] black hole.

[**0065**] In one example, if one particular address is known to be spamming, or sending otherwise undesirable messages, one particular customer, a Connection Management Record (conman record) is written to the conman table **370** to reject or throttle SMTP connections, thus protecting the organization. Thus, patterns and behavior can be identified based on the source and destination data and the metadata, and connection management records can be rolled up and applied for the entire customer base. Once an offending condition has been identified, on subsequent similar requests to deliver messages, the connection manager **322** queries the conman table **370** in order to determine if there are specific instructions on handling the request from the sending IP address. If disposition flags are present, the connection manager **322** then uses the disposition instructions in the conman table **370** to dispose of the message appropriately or to prevent a connection by the sending mail server **102***a* in the first place. Depending on the condition preventing transmission of the message to the intended user, even if a connection by the connection manager **322** is accepted, the delivery manager **324** may be instructed by the interpreter process **350**, via a delivery manager table **380**, to dispose of the message appropriately. The delivery manager table **380** is similar to the conman table **370** in that the interpreter process **350** or each EMS process **203** writes message processing instructions into the table **380** based on the data stored in the traffic monitor **340**. Disposition instructions that may appear in the delivery manager table **380**, rather than the conman table **370**, include, but are not limited to:

[**0066**] message deliver

[**0067**] message defer

[**0068**] message reject

[**0069**] message redirect.

[**0070**] A more detailed description of some of the components of the message handler **326**, as well as their function, is set forth below with reference to **FIG. 4**.

[**0071**] Turning now to **FIG. 4**, illustrated is a more detailed software module block diagram **400** of the message handling computer process **320**. The mail handler **326** in this embodiment includes a message processing server (MPS) **426**, which is designed to be a fast, stateless mail handler. The MPS **426** takes an incoming e-mail message **110** and can "scrape" or extract information from the message **110** as it is going by, i.e., without imposing a delay on the delivery of the message **110**. The MPS **426** is also able to conditionally deliver messages via the delivery manager **324**, either on its own accord or according to instructions from the interpreter process **350** (see **FIG. 3**). For example, if the interpreter process **350** determines from the data in the traffic monitor **340** that a connection attempt or group of connection attempts from a common source IP address is a directory harvest attack, the interpreter process **350** can update the conman table **370** to instruct the connection manager **322** to reject the connection. Alternatively, the interpreter process **350** may update the delivery manager table **380** to instruct the delivery manager **324** to otherwise dispose of the message. If an application, such as a spam detection application **332**, returns the value of a message that suggests it is spam, the MPS **426**, in coordination with the interpreter process **350**, can configure the delivery of the message to route it to a quarantine website. The decisions on which electronic messages are passed, diverted, deferred, etc. are made in part based on the metadata generated from the universe of incoming messages, and based on the way the EMS **203** has been configured through the administrative console **316** and the applications **332** selected for processing the messages.

[**0072**] Additional sub-modules are also shown in **FIG. 4**. In this embodiment, there is provided a metadata collector submodule **430** and an event sender submodule **432**, which perform functions described with respect to the embodiment of **FIG. 3** of collecting data from the electronic messages entering the EMS **203** and of providing that information to the traffic monitor **340**. Although these submodules are shown associated with the MPS **426**, they could be separate software modules or they could be associated with the metadata collector **430**. While the applications **332** do not specifically write to the conman table **370**, they may be configured, via the application interface **330**, to: a) process the message, b) update disposition flags based on process results, and c) deliver the metadata to the traffic monitor **340**.

[**0073**] An additional feature of the embodiments described in **FIGS. 3-4** is the ability to tailor the delivery of e-mails according to the loading at the destination UA email server **102***c*. The deliver manager **324** can detect loading issues in the designation UA email server **102***c* by, for instance, delay by the server **102***c* in acknowledging the receipt of previous e-mail messages. Thus, the output buffer relay **440** and spool relay **442** serve to spool outgoing messages based on detected loading issues in the destination UA e-mail server **102***c*.

[0074] Referring now to **FIG. 5**, illustrated is a block diagram **500** illustrating an embodiment where two or more message handling computer processes **320***a*, **320***b* are each operating independently, but are connected to a single traffic monitor **340** and conman table **370**. Each process **320***a-n* also shares data regarding the current open connections with the receiving server. This shared delivery manager table **380** contains a current status at any time of all messages in transit to the receiving server. The processes **320***a*, **320***b* include event senders **432***a*, **432***b*, which send metadata to the traffic monitor **340** about the occurring events in the streaming e-mail traffic. The traffic monitor **340** has an event listener **502** that is the communications interface to the event senders **432***a*, **432***b* of the processes **320***a*, **320***b*. The traffic monitor **340** and interpreter process **350** in this embodiment thus monitor and control multiple processes **320***a*, **320***b*, for multiple incoming streams of electronic messages, as shown.

[0075] As an example of the organization of some of the data within the traffic monitor **340**, an exemplary data matrix, in the form of a data table **504**, is shown. In this data table **504**, incidences of e-mails from multiple sources to multiple destinations are arranged as a table, mapping along the rows, messages from particular sources, and along the columns, messages to particular destinations. Potential spam might show up in the table **504**, then, as an instance where a large percentage of the destinations have received messages from a particular source, thereby appearing as a nearly full row in the table **504**. The interpreter process **350** then turns to the database **360** and consults the rules in the database **360** by which the interpreter process **350** has been instructed to operate through the configuration of those rules via the administrative console **316**.

[0076] The user thus configures the interpreter process **350** through the database **360**. Exemplary rules would include the definition of a spam attack (e.g., 100 or some other number of messages from a single IP address), and the actions to take on a spam attack, such as limiting the number of connections granted to the IP address or deleting all incoming e-mails from that IP address. Other examples of situations prompting the creation of message handling rules could be a virus attack, directory harvest attack, e-mail bomb, etc., as stated above. Once the rules have been stored in the database **360**, all the connection managers **322***a*, **322***b* and delivery managers **324***a*, **324***b* associated with that database **360** will use the configuration information in the database **360** and the conman table **370** on each message transaction, based on the destination IP address, to ensure that they are operating under the most up-to-date set of rules. The connection managers **322***a*, **322***b*, as previously mentioned, provide event information to the traffic monitor **340** during this process.

[0077] The interpreter process **350**, which monitors the traffic monitor **340**, can in turn update the conman table **370** based on detected patterns in the traffic monitor **340** that violate specified rules. Modules in the computer processes **320***a*, **320***b* then connect with the database **360**, the conman table **370** and the traffic monitor **340** on each message transaction to receive the most current configuration and access restrictions set forth by the rules or with the delivery manager table **380**, and get instructions on delivery to the destination server based on current conditions. Thus, the system can be constantly updating itself with the most recent connection and delivery information and thereby adapt, in real-time, to changing loads of electronic message traffic, without human review or intervention. The interpreter process **350** updates the conman table **370**, which is queried by all of the connection managers **322***a*, **322***b* in all of the MPSs **426***a*, **426***b* so they all simultaneously know the needed activity promulgated in the rules.

[0078] It is further possible to configure systems in which multiple delivery managers **324***a*, **324**b and/or connection managers **322***a*, **322***b* communicate with one another, such that, for example, if one of the delivery managers **324***a*, **324***b* notices that a destination mail server is slow, a delivery manager **324***a*, **324***b* notifies all the other delivery managers **324***a*, **324***b* to defer or slow down message delivery to the particular destination server.

[0079] All transaction data is stored in Logs **506**. The Logs **506** will keep records of all message transactions and parameters. In an exemplary embodiment, detailed reports **508** are generated, perhaps on a daily basis, on what servers sent what to certain destination addresses. In such an embodiment, this data may be presented in a graphical web-based format, or it may be downloaded as raw data by a user. Information on which the reports **508** may be generated include, but are not limited to, source IP address, message content type, message volume, recipient information, etc.

[0080] Alerts **510** may also be configured for informing an administrator(s) of conditions regarding their system. For example, if the EMS **203** detects a directory harvest attack, the interpreter process **350** will update the conman table **370** and generate an alert to the specified recipient. In another example, if a mail server goes down, the interpreter process **350** will update the disposition flag in the conman table **370** to spool, and generate an alert to the specified recipient. As such, Alerts **510** can be generated based on all conditions that the interpreter process **350** identifies.

[0081] In one embodiment, in accordance with **FIG. 6**, a user database hierarchy **600** is established whereby parameters for the identification and disposition of managing connections and scanning message data, as well as other events, can be tailored according to the position of the user within the hierarchy **600**. All users within the system fall beneath the top level **602** in the hierarchy, and thus there will be established certain rules for all users in belonging to the system.

[0082] Beneath the top level **602**, users may belong to subsidiary organizations, which are the customers **604***a*-**604***c* to the top-level **602** administrator. For example, a user at Acme Corporation might have the e-mail address user1@acme.com, where the address acme.com is the top-level **602** domain server address associated with Acme in the distributed DNS database servers **108**. E-mails would be acted upon according to the top-level **602** rules. Additionally, the specific rules of acme.com would be applied to those users, because user**1** as "customer **#1**"**604***a* in the hierarchy would have set forth its particular requirements. The particular requirements of user**1**, however, would not be applied to the user groups associated with "customer **#2**"**605***b* or "customer **#3**"**604***c*.

[0083] Furthermore, sometimes organizations will have subsidiary organizations **606***a*, **606***b*, thus resulting in dif-

ferent domain name, such as corp.acme.com and usa.acme-.com. The embodiments described herein allow for custom rules to also be applied at successively lower hierarchical levels without the need necessarily to implement a complete set of personalized rules for each user, although such personalization is also possible.

[0084] Turning now to **FIG. 7**, illustrated is a database structure **700** that can be used by a connection manager to act on events in connection with the hierarchy of **FIG. 6**. According to this database structure **700**, conman records **710** for use in a conman table **370** are organized by an Internal Identifier ("IID") **710***a*, which is a record of where the recipient resides in the hierarchy **600**, as well as which configuration parameters are set. Also illustrated are additional fields that can be included in the conman records **710** for the starting IP address **710***b* and the ending address **710***c* for originating IP addresses of messages. Other exemplary fields are the expiration time **710***d* for the conman record **710**, as well as the disposition flag **710***e* of the conman table **370**, which is the action to be taken by the connection manager **322** in response to particular connection requests.

[0085] In this embodiment, it is the interpreter process **350** that creates the conman records **710** according to rules that have been set-up for users within the organizational hierarchy **600**. Alternatively, conman records **710** may also be created manually through the administrative console **316**. These records **710** may be stored in the database **360** or in another database accessible by the connection manager **322**. A single IID may have multiple records **710**. These records **710** contain an expiration value **710***d* that allows blocked, throttled, or otherwise controlled sending mail servers, to retain status as legitimate senders without restriction, if their messaging practices are cleaned up. Once the expiration value **710***d* is reached, the connection manager **322** and MPS **426** will process individual messages from that sender. If they are continuing to send viruses, a new record **710** in the conman table **370** will be established. This process will repeat until the condition of the sender changes and they begin sending legitimate email messages.

[0086] Also illustrated in **FIG. 7** is a detailed record **720***a-i* of possible disposition flags **710**e within the conman table **370**. The illustrated examples are message accept **720***a*, message reject **720***b*, message quarantine **720***c*, message spool **720***d*, message defer **720***e*, message throttle **720***f*, message redirect **720***g*, connection rejection **720***h*, and blackhole **720***i*. Of course, the invention is not limited to these specific disposition flags **710***e*.

[0087] Referring now to **FIG. 8**, illustrated is one embodiment of the operation of an MPS through an operational flowchart. As indicated in the diagram, along the entire process data resulting from the process is written into a traffic monitor using various components of the MPS in the EMS, as discussed above in greater detail. That data may then be used by an interpreter process to update information in a conman table employed by a connection management module, as well as in a delivery management table employed by a delivery management module. The process begins at a start step, and then moves to step **800**, where a sender opens a connection via a sender mail server in an attempt to send an electronic message, such as an e-mail, to a targeted user connected to a receiving mail server. At step **802**, an EMS constructed according to the principles described herein intercepts the connection attempt by the sender, and receives information from the sender, such as SMTP information (e.g., sender's IP address).

[0088] At step **804**, the EMS receives similar information, such SMTP information (e.g., the receiver's e-mail address), regarding the intended receiver of the message. Once both sets of data have been received by the EMS, the process moves to a step **806**, where this data is compared with records in a connection management (conman) table. As discussed above, the records in the table may be updated by an interpreter process based on information held in the data matrix of a traffic monitor. If any blocks on transmissions from the sender have been instituted, a negative response is given at step **806** and the transmission attempt is rejected. Alternatively, if the EMS has established that all messages from a particular sender are not to be accepted, the process may move from step **802**, where the sender's SMTP information is received by the EMS, to step **806**, where the IP address of the sender is compared with potential disposition flags in the conman table. In this case, the transmission attempt by the sender would be rejected without the need to receive the receivers SMTP information at step **804**.

[0089] At step **806**, if no blocks against the sender are found in the conman table, an affirmative response is given and the process moves to step **808**. At step **808**, the intended recipient's information is validated against a list of users in a user database or directory, as well as a user list in a destination server directory. If the attempted transmission does not contain valid recipient information, a negative response is given at step **808** and the transmission is rejected. Also, even if a valid recipient is found in the user database, if the recipient information is not also validated against the user list in the destination server database, the transmission may be rejected. If validation from both the user database and the destination server database is obtained, an affirmation response is given and the process moves to step **810**.

[0090] At step **810**, a delivery manager table is queried to determine whether the intended message can be delivered to the destination server. For example, the delivery manager table may be queried to determine if the destination server is capable of receiving the transmission or has it's load limit been reached. If the destination server is not read to receive the message, an affirmation response is given at step **810** and the transmission attempt is deferred for delivery at a later time, once the destination server is ready to receive the message. If the destination server is capable of receiving the message, a negative response is given at step **810** and the process moves to a step **812**. As indicated in the diagram, data regarding the sender and recipient has been written to the traffic monitor throughout this process.

[0091] At step **812**, all of the data in the attempted transmission is received by the EMS, including header or other routing information, as well as the data forming the intended electronic message to be delivered. The process then moves to step **814**, where the configuration profile established by rules set forth by, for example, configuration settings for the user or the organization, are read in order to determine how to process the message. At step **816**, applications are employed to perform analysis of the message data to identify unwanted, prohibited or damaging messages. Metadata associated with the results of this processing is

written to the traffic monitor and used by the interpreter process to determine patterns or conditions used to establish connection and delivery guidelines. Examples of the metadata created by using the applications are set forth above in Table 1.

[0092] Once the applications have completed the analysis, the process moves to step **818**, where the results of the application processing are compared against the contents of the configuration database. If the results of the application processing suggest an alternate disposition flag than the flag currently available for the message, a new disposition flag is inserted. At step **820**, the results from step **818** are compared to any disposition flags assigned to the message as were set forth in the conman table. If, at step **820**, a disposition flag indicating the attempted transmission will not be accepted at this time, the process moves to the appropriate step corresponding with the existing disposition flag in the conman table. More specifically, if the message is to be spooled, the process moves to step **822**. If the message is to be quarantined, the process moves to step **824**. If the message is to be sent to a "black hole", the process moves to step **826**. If the message is to be deferred, the process moves to step **828**. If the message is to be redirected, the process moves to step **830**.

[0093] However, if, at step **820**, the records in the conman table establish that the transmission is to be accepted, the process moves to step **832**. At step **832**, the message is transmitted to the intended destination sever. At step **834**, the message is received by the destination server. At step **836**, the destination server sends an acknowledgment of receipt of the message (an "ACK") back to the EMS to acknowledge receipt of the message from the delivery manager in the EMS. Finally, at step **838**, the EMS transmits an ACK of transmission back to the original sender of the message to inform the sender that the message has been transmitted to the targeted user. The process then ends.

[0094] Those who are skilled in the art will understand that the practice of the proposed process is not limited to the specific steps set forth in **FIG. 8**. Thus, a greater or lesser number of steps may be employed. Additionally, steps having greater or lesser detail than those illustrated in **FIG. 8** may also be employed to advantage.

[0095] Turning now to **FIG. 9**, illustrated is a flow diagram **900** setting forth one embodiment of the procedures employed by the connection manager **322** for use in managing incoming electronic messages. More specifically, the diagram **900** illustrates assigning control instructions based on a sending IP address, and configuration parameters for the particular recipient in the organizational hierarchy managed by the EMS **203**. The connection manager **322** is initiated into operation by the MPS **426**, each time the MPS **426** detects a new "RCPT" command identifying a new recipient in the traffic stream. The initial operating condition of the connection manager **322** is thus shown in the diagram **900**, at step **902**. At step **904**, the connection manager **322** queries the conman table **370** for records having an IID that corresponds to the new recipient. If, at decision block **906**, it is determined that the conman table **370** contains an entry for the particular IID, control is passed to a secondary control loop in which each IID record is read (step **908**), examined to see whether it is still active or expired (step **910**), and acted upon (step **912**). A single IID may have multiple records, and so the above actions in steps **908-912** are repeated as shown in the diagram **900**, as long as there are additional records for the IID as reflected at decision block **914**.

[0096] As shown in **FIG. 9**, a particular recipient may fit at a certain level within a hierarchy, and the particular connection actions can be tailored in this method according to each of these hierarchical levels. Accordingly, at step **916**, the particular IID is examined for its membership at a next higher hierarchical level. If there are connection manager **322** records in the conman table **370** that are associated with the particular IID at this hierarchical level, then according to the flow of the process for decision step **918**, the actions of the loop, steps **908-914** are repeated for all of the actions associated with the IID at the higher level. As before, once all actions associated with a given IID at this hierarchical level have been carried out, then control returns to the decision step **920**, whereupon the IID relative to the hierarchical levels is examined to see whether the top hierarchical level has been reached. If the highest hierarchical level has been reached, the connection manager **322** returns control to the MPS **426**.

[0097] Connections may be characterized as a pair of endpoints—sender and recipient. The connections can be managed based on the sender/recipient pair, or they may be managed based on just the recipient identifier. IP address ranges can be used to specify senders and/or recipients, and depending on the location of the indefiniteness, the ranges or indefiniteness can also be used to specify where a particular IP address belongs within a hierarchy. The IP address's membership in sets defined by certain IP address ranges can also be used to define that address's hierarchical organization memberships.

[0098] Connection management records may be inserted on a per-organization basis within the hierarchy, and they may be inherited from higher-level organizations down to lower-level organizations. As described with respect to the process flow of **FIG. 9**, the records can be processed in a bottom-up fashion, from a particular organization up to the root organization. When multiple records are present at a single organization, they may be processed in expire-time order, with the ones expiring at the latest date being examined first. Alternatively, they may be processed in a different order depending on how the process is defined.

[0099] Although there are many types of actions or dispositions that can be taken based on the connection requested, as discussed above, some of the common ones include the following:

[0100] ERROR: An error message is specified and passed back to the sender (e.g., "Error **501**—unknown user).

[0101] QUARANTINE: The message will be quarantined under a specified reason (e.g., obscene, pornographic, or virus-infected).

[0102] BLACKHOLE: The message will appear to be delivered (i.e., a delivery confirmation is passed to the sender), but will not really go anywhere. Unless further modifications are made, another application may still cause the message to be quarantined.

[0103] ACCEPT: The message will be accepted and forwarded to the destination server. Unless further modifications are made, another application may still block the message.

[0104] SPOOL: the email server corresponding to the IID is not responsive, and therefore messages should be written to the spooler

[0105] As described above, the connection manager **322** handles the accepting and making of requested connections in electronic message transactions. The dispositions described above can be implemented by the connection manager **322** by manual configuration through the administrative console **316**, or they can be automatically implemented by the interpreter process **350** or another software module. As with the process of **FIG. 8**, the practice of the process illustrated in **FIG. 9** is not limited to the specific steps set forth therein. Thus, a greater or lesser number of steps may be employed. Additionally, steps having greater or lesser detail than those illustrated in **FIG. 9** may also be employed to advantage.

[0106] Looking now at **FIG. 10**, illustrated is an operational flow diagram **1000** of the interpreter process **350**, which was also generally described in the text accompanying **FIGS. 3-4**. Execution of the process flow for the interpreter process **350** begins at step **1002**, which is the sleep state for the process. After a certain period of time, e.g., fifteen seconds, execution of the program flow moves to step **1004**. At step **1004**, the EMS **203** configuration is updated for all the organizations for which the EMS **203** is responsible. This process may be referred to as "synchronization." At step **1006**, the interpreter process **350** begins to analyze the traffic events occurring for each organization identified in step **1004**. As a part of this action, the EMS **203** evaluates the traffic events occurring as reflected in the data stored in the traffic monitor **340**.

[0107] The process flow continues at step **1010**, where the EMS **203** evaluates the event conditions for the particular EMS **203** event rule for the organization under consideration. At decision step **1012**, the interpreter process **350** software queries whether the particular rule is an active one. If the rule is not active, the process flow goes to decision step **1014**, whereupon the software module queries whether there are more EMS **203** event rules to be processed for the particular organization. If there are no further EMS **203** event rules for the particular organization, the process flow proceeds to decision step **1016**, at which the software module queries whether there are additional EMS **203** organizations for which the EMS **203** events should be processed. If there are no additional EMS **203** organizations to process, the software module returns operation to the sleep mode at step **1002**, which was the beginning of this process flow. If, however, there are additional EMS **203** organizations having EMS **203** event rules to be processed, then operation would return to step **1006**, at which the software module will again begin the process of evaluating the EMS **203** traffic against the EMS **203** event rules for this other organization.

[0108] Again at step **1010**, the event conditions are evaluated against each EMS **203** event rule. If, in this case, at decision step **1012** the rule is active, the software flow would proceed to step **1020**. At step **1020**, the interpreter process **350** evaluates each traffic cell, where a traffic cell is a single connection between a source and a destination, and is represented in the traffic monitor **340** by a single cell in the data table **504**. At decision step **1022**, if a positive result of the evaluation of the particular traffic cell at step **1020** is positive ("result greater than one"), then execution of the interpreter process **350** algorithm continues to decision step **1024**. At decision step **1024**, the rule state is evaluated to see whether it has previously been triggered. If it has not, at step **1026**, the event execution is begun. If the rule state has already been triggered, then execution of the event will continue at step **1028**. In either case operation continues at step **1030**, at which time a process is begun for "firing" the actions that are associated with particular event states.

[0109] At decision step **1032**, the interpreter process **350** queries whether that particular action associated with the event already has a state associated with it in the process execution. If no, the interpreter process **350** then queries whether the particular action should be delayed at decision step **1034**. If the action should not be delayed, at step **1036**, the particular action is "fired" and a state is set indicating the activation of that action. Next, at decision step **1038**, the interpreter process **350** queries whether there are additional actions to fire. If so, execution returns to step **1030**; in this loop, steps **1030** to **1039** continue until all actions associated with a particular event have been processed. Once there are no more actions to "fire" at step **1038**, execution proceeds to decision step **1040**, whereupon the interpreter process **350** software examines whether there are more traffic cells to be evaluated. If there are additional traffic cells to evaluate, the process returns to step **1020**. If there are no more traffic cells to evaluate, the process returns to decision step **1014**, at which it is determined whether there are additional EMS **203** rules to be processed. Based on this decision, the process can continue at previously described steps **1010** or **1016**.

[0110] Again evaluating the traffic cells at step **1020**, if there is not a positive result at decision step **1022**, the process proceeds to step **1050**, at which the interpreter process **350** queries whether the particular rule state was previously ON. If not, there is no particular action to take with respect to this rule state, and the processing of traffic cells can continue at decision step **1040**. If, however, the rule state had previously been ON, but is now OFF, which is the situation indicated by a positive result at decision step **1050**, then the process proceeds to step **1052** to evaluate the ending procedures for that particular rule state. If a positive result occurs at decision step **1054**, then the event end for the particular rule state is processed at step **1056**. If, however, there is not an end process to execute as indicated by a negative result at decision step **1054**, then the algorithm of the interpreter process **350** will continue to process additional traffic cells through decision step **1040** and its subsequent branches.

[0111] Now looking at **FIG. 11**, illustrated are data structures that can be employed in an embodiment of the EMS **203** for the real-time monitoring of traffic in the traffic monitor **340**. As was shown in **FIG. 5**, in some embodiments, multiple message handling computer processes **320*a***, **320*b*** are employed, whereby multiple connections to a single traffic monitor **340** and interpreter process **350** are processed in parallel. **FIG. 11** shows the MPSs **426*a*-426*d*** of multiple such computer processes **320*a***, **320*b*** connected to a single ring buffer **1102**, which ultimately provides data in this embodiment for a single traffic monitor. The MPSs

426*a*-**426***d* send their data to the ring buffer **1102** in small, asynchronous blocks of data. The data may be tagged with a time and a session ID in each instance. For example, each block of data might be tagged with a header, "SID8, 00:02," which would indicate that the session ID is session number 8, and the time for the receipt of the data is 00:02. The session IDs and times shown in this example are merely examples, and session IDs into the hundreds or thousands could be used. In addition, time indicators as precise as thousandths of a second or less could also be used.

[**0112**] The ring buffer **1102** holds all the data generated by the connection managers **322**, delivery managers **324**, MPSs **426***a*-**426***d*, and, in this example, it sorts the data in SID order, which reduces searching overhead during insertion into a later intermediary format and may also provide efficiency when storing data into the ring buffer **1102**. From the ring buffer **1102**, the traffic monitoring data is then stored into an intermediary data structure **1110**. In this intermediary data structure **1110**, the data is placed into groups **1120** associated with the session IDs, where the groups **1120** have records for each connection (C**1**, C**2** . . . CN), and for each message (M**1**, M**2**, M**3** . . .) sent over each connection. This data is continually updated with new data from the ring buffer **1102**, and it is continually refreshed when the data is older than the data stored in the actual traffic monitor data matrix **1130**.

[**0113**] The structure of the data matrix **1130** is only an exemplary format for the traffic monitor data matrix **1130**, and is maintained for access by the interpreter process **350**. Use of the intermediary data structure **1110** allows for a more compact traffic monitor data matrix **1130**, which can be structured so as to have no empty cells. The data matrix **1130** is arranged with different IIDs (destinations) populating different rows and with differing Source IPS (SIPs, or sources) as the differing columns within each row. By individually structuring each row with independent column entries for the SIPs, it is possible to build this data table or matrix **1130** as shown in **FIG. 11**, with no empty cells. Then, within each cell, different statistics can be provided, and the interpreter process **350** will be able to recognize certain activity based on the information stored in those cells.

[**0114**] It may be desirable for both the interpreter process **350** and other resources to have access to the traffic monitor data matrix **1130**. At least two different mechanisms can be provided to allow access to the contents of the data matrix **1130**—direct and polled. Through direct access, the interpreter process **350** can lock up a given cell of the data matrix **1130** to read that cell's data in real time. Through polled access, a process can be provided for multiple resources to request access to data in the data matrix **1130** via a network. The data matrix **1130**, or a process associated with the data matrix **1130**, can arbitrate the requests, and at certain periods can lock the requested data in the data matrix **1130**, and access and send that data to the requesting resources. The data can be requested as raw data, summary data, or it can be requested by a customer mailhost.

[**0115**] Thus, the presently described system has the ability to map in a data matrix, in real time, all incoming requests and requested destinations, all relevant message parameters (spam, virus, recipients, connection time, data size, destination server return code, etc), as well as to monitor the connection/destination matrix in real time for any number of recipient email addresses or mail servers across multiple customers, and to immediately initiate action automatically based on a real-time monitoring of the state of the traffic monitor data matrix **1130**. Other system abilities possessed in the described embodiments include the ability to recognize, in real time, all SMTP connections that are being originated in order to request a connection to a recipient mail system, and not just necessarily a single server. The described EMS is also able to use matrix data from one customer/recipient to modify actions for another. For example, if the EMS recognizes a "spammer" based on its actions towards one customer group, the EMS is also able to prevent spam from that source from reaching other destinations.

[**0116**] Thus, the EMS described herein can handle, filter, and monitor, and react against, in real time, many incoming connections. The EMS is also operable, however, to tune the delivery of messages to a destination mail server based on the loading in that server or on other conditions. It can balance loads among multiple destination servers, spool outgoing messages to destination servers in a controlled manner, and conditionally deliver messages to destination servers based on different conditions.

[**0117**] Looking next at **FIG. 12**, illustrated is a spool manager comprising three MPSs, as described below. The Spool Delivery Manager is invoked by an MPS plug-in that runs on the message handling computer process of the EMS, and works in harmony with the connection manager to determine whether or not messages should be spooled. With reference to **FIG. 12**, the Spool Delivery Manager functions as follows:

[**0118**] (1) To initiate spooling, a SPOOL connection management record must be inserted for an organization, either manually through the UI or automatically by the interpreter process, if it detects the organization mail server is unreachable.

[**0119**] (2) The connection manager assigns a SPOOL tag to each message sent to an organization for which there exists a SPOOL connection management record in the conman table.

[**0120**] (3) The Spool Delivery Manager examines each incoming message for a "Spool" tag.

[**0121**] (4) If a Spool tag exists for a message, the Spool Delivery Manager blocks the message from being delivered, and instead relays the message to a spool server using the Spooler.

[**0122**] The Spooler is a modified MPS application running on the spool server that accepts messages from the Spool Delivery Manager, and stores them in a spool repository. With reference to **FIG. 12**, the Spooler functions as follows:

[**0123**] (1) The Spooler waits for an SMTP connection request from the Spool Delivery Manager.

[**0124**] (2) Each incoming SMTP command, including the raw message data, is stored in the organization's (i.e., recipient's) spool repository.

[**0125**] (3) If the spool size reaches one of several predefined spool size checkpoints (e.g. 75% of capacity), an alert notification is generated.

[0126] (4) If after storing the message, the spool size exceeds the maximum allocated spool size for the organization, an alert notification is generated, and the spool connection management record is removed, preventing subsequent messages from being spooled.

[0127] (5) If a spool tag exists for a message, the Spool Delivery Manager blocks the message from being delivered, and instead relays the message to the spool server using an SMTP connection.

[0128] The Despooler is also a modified MPS application running on the spool server that accepts messages from the Spool Delivery Manager, and stores them in a spool repository. To this end, the Despooler functions as follows:

[0129] (1) The Despooler waits for an SMTP connection request from the Spool Delivery Manager.

[0130] (2) Each incoming SMTP command, including the raw message data, is stored in the traffic monitor.

[0131] (3) Spool Delivery Manager in order to maintain proper connection limiting to the organization.

[0132] (4) If the message is rejected by the organization, the Despooler will bounce the message to the original sender.

[0133] (5) If a message is successfully delivered, it is tagged "delivered" in the spool repository.

[0134] Steps 2-5 are repeated until all messages in the spool repository have been delivered.

[0135] Referring now to **FIG. 13**, illustrated is a screen shot **1300** of an example access page for an administrative console for use with an EMS according to the present invention. As shown from the access page is available to users and/or system administrators for monitoring of statistics and alarms occurring in their electronic messaging networks. In addition, the access page may be employed by users and/or system administrators for the configuration of rules employed by the EMS to manage the transmission of electronic messages. The particular access page shown here includes multiple access tabs, including "Connection Mgr", "Delivery Mgr", "Spool Mgr", Alerts" and "Reports". In addition to accessing these individual components of the EMS, the access page in **FIG. 13** provides status of the individual components, as well as an overview of the flow of electronic messages into the system.

[0136] Turning briefly to **FIG. 14**, illustrated is a screen shot **1400** of an example page for monitoring and configuring a connection manager used in an EMS according to the present invention. As shown, this access page displays the status of the connection manager in an EMS, as well as providing statistics of particular transmission violations that have occurred. Although the particular offending activities illustrated are only directory harvest attacks, virus outbreaks, e-mail bombs and spam attacks, the access page may be configured to illustrated statistics of other types of offending behaviors without limitation.

[0137] **FIG. 15** is a screen shot **1500** of another example access page for a connection manager used in an EMS of the present invention. As shown, this access page provides definitions for specific offending actions of incoming electronic messages to assist users in configuring the EMS as their needs arise. In addition, this access page also includes various detection and prevention selections, allowing users a broader range of choices for the management of their incoming electronic messages.

[0138] Looking at **FIG. 16**, illustrated is a screen shot **1600** of an example page for monitoring and configuring a delivery manager used in an EMS according to the present invention. This access page displays the status of the delivery manager in an EMS, as well as providing statistics of particular delivery (or non-delivery) actions taken by the EMS in response to offending activities of incoming messages. In addition, this access page allows users to monitor the status of distinct destination servers, for example, to determine the free capacity of such destination servers.

[0139] Turning finally to **FIG. 17**, illustrated is a screen shot of another example page for a delivery manager used in an EMS. As shown, this access page allows the user to configure specific details of the individual destination servers shown in **FIG. 16**. Configuration parameters that may be altered through this access page include connection capacities, as well as adding new destination servers to the EMS to enjoy the protection provided by the present invention.

[0140] While various embodiments of an EMS constructed according to the principles disclosed herein, as well as specific components of the EMS, have been described above, it should be understood that they have been presented by way of example only, and not limitation. Thus, the breadth and scope of the invention should not be limited by any of the above-described exemplary embodiments, but should be defined only in accordance with the following claims and their equivalents issuing from this disclosure. Furthermore, the above advantages and features are provided in described embodiments, but shall not limit the application of such issued claims to processes and structures accomplishing any or all of the above advantages.

[0141] Additionally, the section headings herein are provided for consistency with the suggestions under 37 CFR 1.77 or otherwise to provide organizational cues. These headings shall not limit or characterize the invention(s) set out in any claims that may issue from this disclosure. Specifically and by way of example, although the headings refer to a "Technical Field," such claims should not be limited by the language chosen under this heading to describe the so-called technical field. Further, a description of a technology in the "Background" is not to be construed as an admission that technology is prior art to any invention(s) in this disclosure. Neither is the "Brief Summary" to be considered as a characterization of the invention(s) set forth in issued claims. Furthermore, any reference in this disclosure to "invention" in the singular should not be used to argue that there is only a single point of novelty in this disclosure. Multiple inventions may be set forth according to the limitations of the multiple claims issuing from this disclosure, and such claims accordingly define the invention(s), and their equivalents, that are protected thereby. In all instances, the scope of such claims shall be considered on their own merits in light of this disclosure, but should not be constrained by the headings set forth herein.

What is claimed is:

1. A method of managing the transmission of electronic messages from sending mail servers to receiving mail servers, the method comprising:

reviewing at least one incoming electronic message sent from the sending mail server to the receiving mail server;

obtaining data from the at least one incoming electronic message; and

throttling at least one SMTP connection upon which the at least one electronic message arrives based at least in part on the obtained data.

2. A method according to claim 1, wherein obtaining data from the at least one incoming electronic message comprises extracting source data associated with the sending mail server from the at least one incoming electronic message.

3. A method according to claim 2, wherein the source data comprises the source IP address of the sending mail server.

4. A method according to claim 1, wherein obtaining data from the at least one incoming electronic message further comprises deriving metadata associated with the at least one incoming electronic message and supplementing the obtained data with the metadata.

5. A method according to claim 4, wherein the metadata derived from the at least one incoming electronic message is selected from the group consisting of:

count of connection attempts from the source IP address;

count of current open connections from the source IP address;

duration of connections from the source IP address;

count of messages from the source IP address;

message size;

count of recipients on messages;

count of spam messages from the source IP address;

count of virus infected messages from the source IP address;

count of messages from the source IP address with unwanted binary attachment;

count of messages from the source IP address with unwanted content; and

count of messages from the source IP address against which the disposition option was blocked, black-holed, spooled, or quarantined.

6. A method according to claim 1, wherein reviewing the at least one incoming message comprises intercepting at least one incoming electronic message between the sending mail server and the receiving mail server.

7. A method according to claim 6, wherein the intercepting comprises intercepting the at least one incoming electronic message within an intermediate mail server.

8. An electronic message management system for use in managing the transmission of electronic messages from sending mail servers to receiving mail servers, the system comprising:

an intermediate service configured to intercept at least one of the electronic messages between a sending mail server and a receiving mail server; and

a connection management module associated with the intermediate service, the connection management module configured to obtain data from the at least one incoming electronic message and to throttle an SMTP connection upon which the at least one electronic message arrives at the intermediate service based at least in part on the obtained data.

9. A system according to claim 8, wherein the data obtained from the at least one incoming electronic message comprises source data associated with the sending mail server extracted from the at least one electronic message.

10. A system according to claim 9, wherein the source data comprises the source IP address of the sending mail server.

11. A system according to claim 8, wherein the data obtained from the at least one incoming electronic message further comprises metadata associated with the at least one incoming electronic message derived from the at least one electronic message, the metadata supplementing the obtained data.

12. A system according to claim 11, wherein the metadata derived from the at least one incoming electronic message is selected from the group consisting of:

count of connection attempts from the source IP address;

count of current open connections from the source IP address;

duration of connections from the source IP address;

count of messages from the source IP address;

message size;

count of recipients on messages;

count of spam messages from the source IP address;

count of virus infected messages from the source IP address;

count of messages from the source IP address with unwanted binary attachment;

count of messages from the source IP address with unwanted content; and

count of messages from the source IP address against which the disposition option was blocked, black-holed, spooled, or quarantined.

13. A system according to claim 8, wherein the intermediate service in an intermediate mail server.

14. A method of managing the transmission of electronic messages from sending mail servers to receiving mail servers, the method comprising:

reviewing at least one incoming electronic message sent from the sending mail server to the receiving mail server;

obtaining data from the at least one incoming electronic message; and

delaying delivery of the at least one electronic message to the receiving mail server based at least in part on the obtained data.

15. A method according to claim 14, wherein obtaining data from the at least one incoming electronic message comprises extracting source data associated with the sending mail server from the at least one incoming electronic message.

16. A method according to claim 15, wherein the source data comprises the source IP address of the sending mail server.

17. A method according to claim 15, wherein obtaining data from the at least one incoming electronic message further comprises deriving metadata associated with the at least one incoming electronic message and supplementing the obtained data with the metadata.

18. A method according to claim 17, wherein the metadata derived from the at least one incoming electronic message is selected from the group consisting of:

count of connection attempts from the source IP address;

count of current open connections from the source IP address;

duration of connections from the source IP address;

count of messages from the source IP address;

message size;

count of recipients on messages;

count of spam messages from the source IP address;

count of virus infected messages from the source IP address;

count of messages from the source IP address with unwanted binary attachment;

count of messages from the source IP address with unwanted content;

count of messages from the source IP address against which the disposition option was blocked, black-holed, spooled, or quarantined;

count of current open connections to the destination IP address;

duration of connections to the destination IP address;

count of failed connections to the destination IP address;

count of temporary deferral errors from the destination IP address; and

count of unknown user errors from the destination IP address.

19. A method according to claim 15, wherein reviewing the at least one incoming message comprises intercepting the at least one incoming electronic message between the sending mail server and the receiving mail server.

20. A method according to claim 19, wherein the intercepting comprises intercepting the at least one incoming electronic message within an intermediate mail server.

21. An electronic message management system for use in managing the transmission of electronic messages from sending mail servers to receiving mail servers, the system comprising:

an intermediate service configured to review at least one of the electronic messages between a sending mail server and a receiving mail server; and

a delivery management module associated with the intermediate service, the delivery management module configured to obtain data from the at least one incoming electronic message and to delay delivery of the at least one electronic message to the receiving mail server based at least in part on the obtained data.

22. A system according to claim 21, wherein the data obtained from the at least one incoming electronic message comprises source data associated with the sending mail server extracted from the at least one electronic message.

23. A system according to claim 22, wherein the source data comprises the source IP address of the sending mail server.

24. A system according to claim 21, wherein the data obtained from the at least one incoming electronic message further comprises metadata associated with the at least one incoming electronic message derived from the at least one electronic message, the metadata supplementing the obtained data.

25. A system according to claim 24, wherein the metadata derived from the at least one incoming electronic message is selected from the group consisting of:

count of connection attempts from the source IP address;

count of current open connections from the source IP address;

duration of connections from the source IP address;

count of messages from the source IP address;

message size;

count of recipients on messages;

count of spam messages from the source IP address;

count of virus infected messages from the source IP address;

count of messages from the source IP address with unwanted binary attachment;

count of messages from the source IP address with unwanted content;

count of messages from the source IP address against which the disposition option was blocked, black-holed, spooled, or quarantined;

count of current open connections to the destination IP address;

duration of connections to the destination IP address;

count of failed connections to the destination IP address;

count of temporary deferral errors from the destination IP address; and

count of unknown user errors from the destination IP address.

26. A system according to claim 21, wherein the intermediate service is configured to intercept the at least one incoming message between the sending mail server and the receiving mail server.

27. A system according to claim 26, wherein the intermediate service comprises an intermediate mail server.

* * * * *