July 4, 1933. A. M. DOUGAN 1,916,921

THUMB PROTECTOR

Filed July 30, 1932

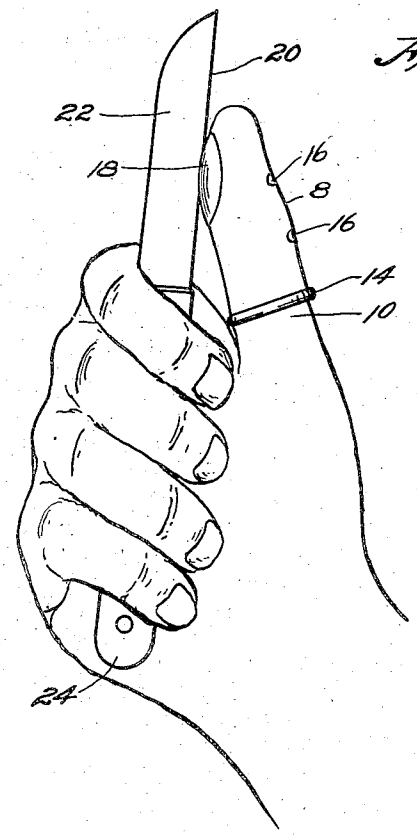

Fig. 1

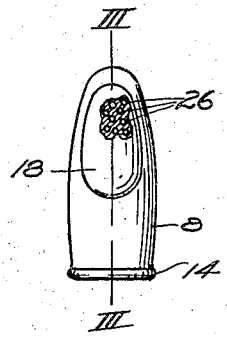

Fig. 2.

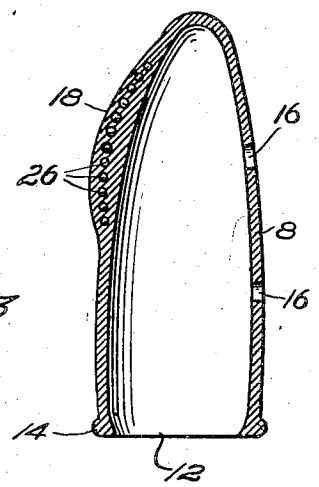

Fig. 3

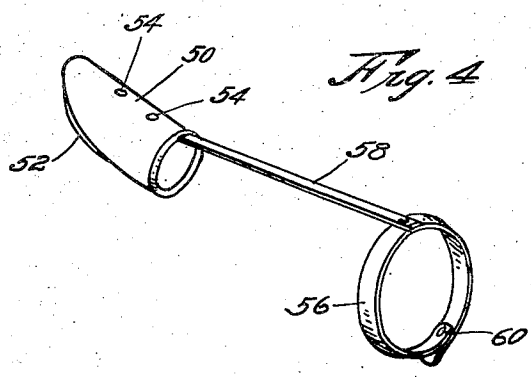

Fig. 4

INVENTOR,
Anna M. Dougan.
BY
Hovey & Hamilton,
ATTORNEYS.

Patented July 4, 1933 1,916,921

UNITED STATES PATENT OFFICE

ANNA M. DOUGAN, OF OLATHE, KANSAS

THUMB PROTECTOR

Application filed July 30, 1932. Serial No. 626,477.

This invention relates to a new article of manufacture specifically adapted for use in protecting the ball of the thumb from cuts and bruises from the action of a sharp knife while the user is peeling, paring, or otherwise manipulating a knife.

The primary object of this invention is to provide an efficient, novel and exceptionally durable thumb protector for use as above mentioned, that will embody means for positively securing itself in place and unique structure for withstanding the action of a knife edge without injury to said edge and without affecting the normal free movement of the thumb and hand.

A further object of the instant invention is the contemplation of a thumb protector which may be slipped over the thumb and which is made of rubber or analogous material susceptible of being washed and made ready for re-use.

Another aim of this invention is to provide a thumb protector wherein is embodied a plurality of spherical reenforcing members disposed to effect a thorough guarding against the cutting action of a sharp knife, yet placed in a manner which will not injure said edge.

With these broad objects in view, the invention will be described by reference to the accompanying drawing, wherein:

Figure 1 is a side elevation of the thumb protector in place.

Fig. 2 is another side view of the protector, showing the zone of reenforcement.

Fig. 3 is an enlarged, sectional view through the protector, taken on line III—III of Fig. 2, and,

Fig. 4 is a perspective view of a modified form of thumb protector made in accordance with the concepts of this invention.

It is well known that in peeling fruits and vegetables the paring knife oftentimes injures the ball of the thumb to such an extent that not only is discomfort experienced, but infection is liable to take place if work is continued.

The article contemplated for overcoming the aforementioned objections may be made as illustrated in the accompanying drawing. Figs. 1, 2 and 3 show one form of the invention and illustrate the manner in which the protector may be worn. The body 8 is stall-shaped or hollow, to receive the thumb 10, and is made of rubber or other flexible material which conforms to the contour of the thumb and bends or flexes therewith so that normal action is not overcome.

Body 8 has formed around the mouth 12 thereof, an annular band 14 of a smaller diameter than the portion of the body adjacent thereto. This expedient insures a fixing of body 8 against displacement and when the thumb is flexed at the first joint, the protector will not become loosened or slide forwardly from the thumb end. A number of vents in the form of openings 16 are provided in the side of body 8 and these vents 16 are preferably disposed above and below that portion of body 8 which overlies the first joint of thumb 10.

When body 8 is in place, a thickened zone 18 should overlie the ball of the thumb to positively protect the same against cutting edge 20 of knife blade 22, the handle 24 of which is grasped by the hand of the user. While thickened portion 18 may simply be formed of material from which body 8 is created, it is oftentimes desirable to embed some reenforcement that is harder than the substance from which body 8 is made. Ordinary metallic reenforcement is not satisfactory because of its destructive action upon cutting edge 20. It is found, however, that the use of a multiplicity of spherical members 26 have the desired effect, yet safeguards to a maximum extent, the sharp edge 20 of blade 22. These members are preferably made of lead and are spaced apart and arranged on a plane spaced inwardly from the outer face of thickened portion 18 so that flexibility of body 8 is not overcome at this zone, but yet when knife blade 22 cuts into thickened zone 18 it will be arrested as soon as a very small portion strikes the face of one of spherical members 26.

Obviously, these members 26 may be molded in place as body 8 is being formed and since they are completely embedded,

they will not alter the appearance of the protector.

Fig. 4 illustrates a modified form of the invention. Body 50 is similar to the body previously described, and has formed thereon a reenforcing or thickened zone 52 and vents 54 formed therethrough. The means, in this instance, for securing protector 50 in place, consists of a wrist band 56, joined to body 50 by connecting strip 58 which should be joined to the body at a point diametrically opposite to the center of thickened zone 52.

An ordinary glove fastener 60 may be used in securing the free ends of band 56 together when the same is encircling the wrist. When the protector is made in this manner, member 14 is eliminated and the parts just described relied upon to maintain body 50 upon thumb 10.

While two forms of the invention have been described, it is understood that an exceptionally large number of modifications might be made in carrying out the salient features of this invention without departing from the spirit thereof. Bodies of various sizes may be made and different materials might be utilized without altering the result and main objects contemplated.

Having thus described the invention, what is claimed as new and desired to be secured by Letters Patent is:

1. As a new article of manufacture, a protector comprising a hollow body of flexible material; a thickened zone formed on one side of said body; means integral with the body for securing the same in place; and a multiplicity of spherical members embedded within said thickened zone.

2. A thumb protector of the character described comprising a stall-shaped body of flexible material; a thickened zone formed on the side of said body; means integral with the body to secure the same in place; and reenforcing of relatively hard, non-flexible material embedded within said thickened portion.

3. A thumb protector of the character described comprising a stall-shaped body of flexible material; a thickened zone formed on the side of said body; means integral with the body to secure the same in place; and reenforcing of relatively hard, non-flexible material embedded within said thickened portion, said reenforcing comprising a plurality of spherical members disposed in an arcuate plane below and parallel with the outer face of said thickened zone.

4. A thumb protector of the character described comprising a stall-shaped body of flexible material; a thickened zone formed on the side of said body; means integral with the body to secure the same in place; and reenforcing of relatively hard, non-flexible material embedded within said thickened portion, said reenforcing comprising a plurality of spaced-apart, spherical members disposed in an arcuate plane beneath the outer face of said thickened zone.

5. A thumb protector of the character described comprising a stall-shaped body of flexible material; a thickened zone formed on the side of said body; means integral with the body to secure the same in place; and reenforcing of relatively hard, non-flexible material embedded within said thickened portion, the said securing means comprising a wrist band, and a connecting strip joining said body and wrist band, the point of connection between said strip and body being diametrically opposite said thickened zone.

In testimony whereof, I hereunto affix my signature.

ANNA M. DOUGAN.