PCT WORLD INTELLECTUAL PROPERTY ORGANIZATION
International Bureau

INTERNATIONAL APPLICATION PUBLISHED UNDER THE PATENT COOPERATION TREATY (PCT)

(51) International Patent Classification 5 :		(11) International Publication Number: WO 92/21448
B05D 1/28, B05C 17/00	A1	(43) International Publication Date: 10 December 1992 (10.12.92)

(21) International Application Number: PCT/US92/04533

(22) International Filing Date: 29 May 1992 (29.05.92)

(30) Priority data:
708,588 31 May 1991 (31.05.91) US

(71) Applicant: DAB 'N STIC [US/US]; 1425 Hanford Street, Levittown, PA 19057-4709 (US).

(72) Inventor: VENNE, Richard, A. ; 808 Cliff Road, Bensalem, PA 19020 (US).

(74) Agents: JAMIESON, John, Jr. et al.; Panitch Schwarze Jacobs & Nadel, 1601 Market Street, 36th Floor, Philadelphia, PA 19103 (US).

(81) Designated States: AT (European patent), AU, BE (European patent), CA, CH (European patent), DE (European patent), DK (European patent), ES (European patent), FR (European patent), GB (European patent), GR (European patent), IT (European patent), JP, LU (European patent), MC (European patent), NL (European patent), SE (European patent).

Published
With international search report.

(54) Title: LIQUID ADHESIVE DISPENSER

(57) Abstract

A method of dispensing liquid adhesive includes passing a liquid adhesive through the open mouth of a container, through a depressable valve (34) frictionally received in the mouth of the container and through a flexible porous reticulated foam cover (30) affixed over the valve (34) and mouth to receive and apply the adhesive released through the valve (34). The adhesive is left to cure in the foam cover (30) and form a seal. The foam cover (30) is then flexed to break the seal and reestablish liquid adhesive flow through the cover (30). The valve (34) includes a valve assembly with a body (36) and integrally connected helical spring members (38) that are received and retained in a retainer ring (12).

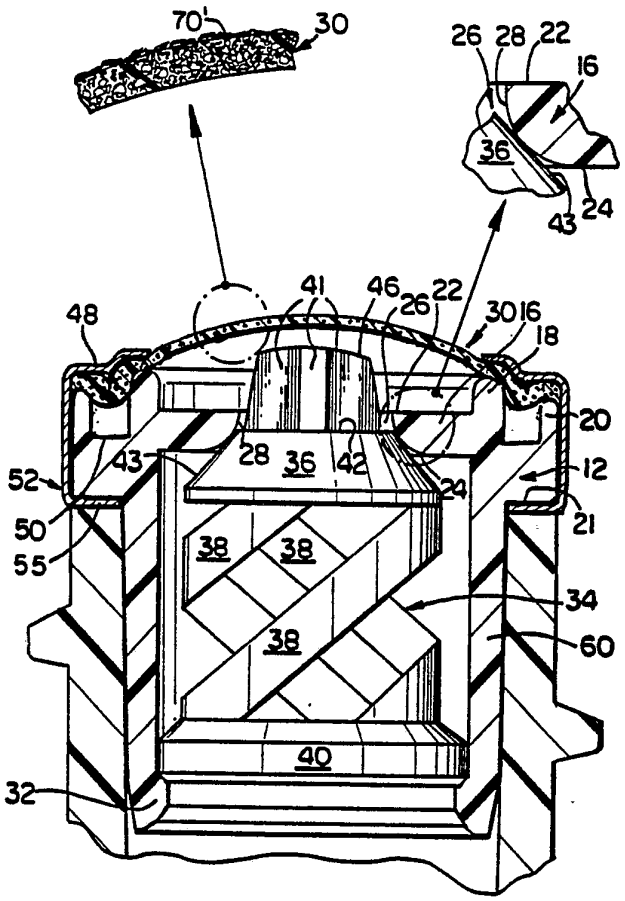

FOR THE PURPOSES OF INFORMATION ONLY

Codes used to identify States party to the PCT on the front pages of pamphlets publishing international applications under the PCT.

AT	Austria	**FI**	Finland	**ML**	Mali
AU	Australia	**FR**	France	**MN**	Mongolia
BB	Barbados	**GA**	Gabon	**MR**	Mauritania
BE	Belgium	**GB**	United Kingdom	**MW**	Malawi
BF	Burkina Faso	**GN**	Guinea	**NL**	Netherlands
BG	Bulgaria	**GR**	Greece	**NO**	Norway
BJ	Benin	**HU**	Hungary	**PL**	Poland
BR	Brazil	**IE**	Ireland	**RO**	Romania
CA	Canada	**IT**	Italy	**RU**	Russian Federation
CF	Central African Republic	**JP**	Japan	**SD**	Sudan
CG	Congo	**KP**	Democratic People's Republic of Korea	**SE**	Sweden
CH	Switzerland			**SN**	Senegal
CI	Côte d'Ivoire	**KR**	Republic of Korea	**SU**	Soviet Union
CM	Cameroon	**LI**	Liechtenstein	**TD**	Chad
CS	Czechoslovakia	**LK**	Sri Lanka	**TG**	Togo
DE	Germany	**LU**	Luxembourg	**US**	United States of America
DK	Denmark	**MC**	Monaco		
ES	Spain	**MG**	Madagascar		

LIQUID ADHESIVE DISPENSER

Field of the Invention

The present invention is directed to dispensing liquid adhesives and, in particular, to dispensing liquid adhesive through a dauber type of applicating dispenser wherein a porous, flexible cover is provided to apply liquid adhesive.

Background of the Invention

In known, dauber type liquid adhesive dispensers, adhesive is wicked directly and continuously from a reservoir by a fabric applicator without the use of a valve. Consequently, if the applicator is left uncovered and exposed to air for more than a short period of time, the liquid adhesive begins to cure and harden in the applicator and even within the dispenser. "Curing" is meant to encompass evaporation of a liquid carrier as well as chemical reaction leading to solidification upon exposure to air. After even a few hours exposure to air, the applicators of such dispensers become unusably clogged with dried adhesive. This is true for all woven and unwoven fabric applicators known to Applicant.

This is true for all woven and unwoven fabric applicators known to Applicant.

A number of patents disclose fluid applicators or daubers of the type which include a valve having a body integrally formed with helical spring legs in a retaining ring forming a seat for the body and a porous, flexible cover attached to the valve. These patents include, for example, U.S. Patents 3,169,267; 3,203,026; 3,264,676; 3,379,490; 3,444,808; 3,570,396; 3,680,968; and 4,723,860.

The present invention is directed to dispensing air curing liquid adhesive particularly through a modification of such valve equipped daubers with porous covers.

Brief Summary of the Invention

In a first aspect, the invention is a method of dispensing an air curing liquid adhesive from a reservoir comprising the steps of: passing liquid adhesive from the reservoir through a flexible, porous, reticulated polymer foam cover generally sealed with the reservoir such that the liquid adhesive passes the cover only by passing through the cover; curing the liquid adhesive in the foam cover to form a seal of the adhesive preventing further passage of liquid adhesive through the cover; flexing the foam cover to break the adhesive seal; and again passing the liquid adhesive from the reservoir through the foam cover and broken adhesive seal.

In another aspect, the invention is a liquid adhesive dispenser comprising: a reservoir of an air curing liquid adhesive having a mouth; and a flexible, porous, reticulated polymer foam cover over the mouth and sealed generally with the reservoir around the mouth such that all liquid adhesive dispensed by the dispenser through the mouth must pass through the cover, the cover being exposed on the dispenser for contact application of the liquid adhesive.

Brief Description of the Drawings

For the purpose of illustrating the invention, there is shown in the drawings forms which are presently preferred; it being understood, however, that this invention is not limited to the precise arrangements and instrumentalities shown.

Fig. 1 is a partially broken away elevation of a preferred dauber of the present invention;

Fig. 2 is a vertical section of the applicator end of the Fig. 1 dauber;

Fig. 3 is a top plan view of the center of the valve;

Fig. 4 is a detailed view of the seat cross-section and the body of the valve in Fig. 2 showing the tangential contact;

Fig. 5 is a detailed cross-sectional view of a portion of the foam cover; and

Fig. 6 is a vertical section of an alternate embodiment dauber and valve.

Detailed Description of the Invention

Referring to the drawings, wherein like numerals indicate like elements, there is shown in Fig. 1 a preferred dauber type liquid adhesive dispenser constructed in accordance with the present invention and designated generally as 10. The dauber 10 includes a bottle or container 14, preferably of a flexible plastic, constituting a reservoir for a quantity of liquid adhesive 70. A flexible porous cover means 30 for dispensing liquid adhesive is located over a mouth of the container 14 and is generally sealed with the reservoir around the mouth, preferably by a ring 52. The porous cover 30 conceals valve means in the mouth of the container 14 and best seen in Fig. 2. Preferably, the necked, mouth end of the container 14 is configured in a conventional manner, such as by the provision of threading 72 on its outer surface, to receive and retain a separate removable outer cap 74. Preferably, the removable outer cap 74 and the container 14 are configured to form an at least essentially airtight seal over the mouth end of the container 14 and flexible cover 30. While threading is shown, any of a variety of other conventional means can be provided for sealingly coupling the removable outer cover and container together including the provision of a snap ring and groove, sizing of the neck of the container 14 and cover 74 to provide a friction press fit, etc.

Referring to Fig. 2, the preferred valve means of the dauber 10 includes a retaining ring 12, which is

mounted on and partially received in the mouth of the container 14, and a unified valve assembly 34 received in the ring 12. Thus located the valve means is fluidly coupled directly with the liquid adhesive 70 in the container 14 and controllably releases liquid adhesive 70 through an outlet opening 26 when operated in a manner to be described. Preferably, the retaining ring 12 is a unified preferably monolithic body formed of a suitable material by conventional means, preferably injected molded from polyethylene, and includes an annular web 16, an upright circular rib 18, and an upright circular lip 20 spaced outwardly of rib 18 and defining with the rib 18 a groove 50. The top surface 22 of web 16 is generally planar. The bottom surface 24 is generally planar and parallel to surface 22. The web 16 preferably includes a circular central opening 26 preferably having a minimum diameter of approximately one-quarter inch. Extending from the upper side 22 to the lower side 24, downwardly and outwardly around and from the opening 26 at the upper side 22, is a generally rounded or convexedly curved surface 28 facing the valve assembly 34 and a preferably frustoconical surface 43 of the valve body 36 of the assembly 43. Preferably, the surface 28 is a radiused curve, the radius being equal to the thickness between the sides 22 and 24, preferably about sixty mils, and thus, is approximately a quarter toroid surface. The retaining ring 12 terminates along its lower portion in an internal bead 32. The bead 32 is preformed during injection molding of the retaining

ring 12, as are upright rib 18 and upright lip 20. Thus, no portion of the retaining ring is rolled or swagged after molding.

The valve means further includes the unified monolithic valve assembly 34, also formed from suitable material in preferably a conventional manner, preferably injection molded from polyethylene. Assembly 34 is received within the retaining ring 12. The valve assembly 34 includes the valve body 36, a circular mounting ring 40 and three helical legs 38 which define a helical spring means integrally connecting circular mounting ring 40 to body 36. The upper end of the valve body 36 is preferably provided with three uniformly angularly spaced legs 41 which project radially and axially outwardly from the center of a substantially planar, circular surface 42 and through the opening 26 when the valve body 36 is seated. The legs 41 are also seen in Fig. 3. The valve body 36 includes the frustoconical outer surface 43 preferably having a slope of approximately forty-five degrees with respect to the vertical in Fig. 2.

The helical spring legs 38 urge the valve body 36 into the retaining ring web opening 26 such that conical surface 43 tangentially contacts the toroidally curved surface 28 of the surrounding opening 26 as seen in Fig. 4, closing the valve. This provides a substantially circular line of contact between the seat 28 and valve body surface 43. The valve body 36 is preferably made of linear low density polyethylene or a similar, mildly

elastically deformable material. The valve body 36 elastically deforms under spring preload along the circular line of contact with web 16. These materials will provide adequate sealing while minimizing the surface friction forces between the seat 28 and valve body surface 43, for the material(s) used, which might tend to lock the valve body to the seat in a cocked position. The valve body 36 is more likely to seat upright against the web 16 without cocking or tilting. As a result, bending stresses at the junction of the valve body 36 and the legs 38 are virtually eliminated and the top surface 46 of the valve body will locate uniformly at a predetermined elevation, for example about .028 inch above the top of circular rib 18, when the ring 12 and assembly 34 are installed in the container 14. The throw of the valve body, therefore, will be uniform from use to use thereby ensuring that the amount of fluid dispensed through the valve means will be uniform and controlled from use to use.

Preferably, the outer diameter of the valve assembly mounting ring 40 is about ten to fifteen mils larger than the inner diameter of the retaining ring at bead 32. This permits the elastically deformable valve

assembly 34 to be pressed into the retaining ring for assembly and avoids a subsequent swagging or rolling step to finish the lower end of the ring 12. The interior surface of the retaining ring wall 60 is also preferably provided with an inverted conical taper of approximately one degree to ensure that the valve mounting ring 40 of the unified valve assembly 34 seats securely on bead 32.

The valve dispenses liquid adhesive 70 from the container 14 when the container is inverted or squeezed and the valve body 36 is depressed into the retaining ring 12 to permit flow of liquid adhesive 70 through web opening 26. The porous cover 30 extends over the top surface 46 of the valve body 36 and lightly rests on or, preferably, is slightly spaced from that top surface 46 when the valve body 36 is seated against the web 16. The degree of spacing has been exaggerated in the figures for clarity in depicting the components. The preferred slight spacing prevents the porous cover 30 from constantly being stretched and stressed by the valve body 36.

The bottom edge portion 55 of ring

52 is crimped beneath the shoulder 21 of the retaining ring 12 formed opposite lip 20. The retaining ring 12 of the valve means is then pressed into the mouth of the container 14 and held by friction fit. In this way, cover 30 is located generally over the mouth of the reservoir 14 and is generally sealed with the reservoir around the mouth. All liquid adhesive being applied with or otherwise dispensed from the dispenser 10 must pass through the mouth, through the valve means and through the cover 30.

Ring 52 is preferably stepped such that a generally flat outer annular portion 53 overlies lip 20 while a generally flat inner annular portion 56 overlies rib 18. Conical portion 54 connects the flat portions 53 and 56. The height of the inner annular portion 56 is less than that of the upper surface 46 of the valve body 36 to permit the valve body 36 to be depressed when the cover 30 of the dispenser 10 is pressed against a surface to which liquid adhesive is to be applied. The cover 30 is held in position by and compressed between aluminum ring 52, lip 20 and rib 18. Inner annular portion 56 further serves to limit the diameter of the foam cover 30 which is exposed thereby making control of the application of the liquid adhesive easier. Unlike designs in which an inner circular edge of an aluminum ring was crimped or swagged into the foam to hold the foam in place, the clamping of the foam between inner surfaces, as opposed to edges of the aluminum ring 52 has been found to reduce cuts and tears in the foam where the foam is being clamped.

There is indicated in Fig. 2 and, in particular, in the enlarged detail of Fig. 2 shown in Fig. 5, a portion of the porous cover 30, preferably consists essentially of a single layer of a felted, thermally reticulated polymer foam of the type disclosed in U.S. Patent 3,175,025, incorporated by reference. The reticulated foam material of that patent is formed from foam material originally comprising a skeletal structure of interconnected material strands and cell membranes supported by the strands forming a network of partially closed cells. During the method of manufacture described in the aforesaid patent, the membranes are removed, leaving the skeletal structure of interconnected strands. The strands define a multiplicity of interconnected, internal voids which provide internal interconnected porosity extending entirely through the foam layer to permit liquid adhesive to be received on any side of the foam material and to pass completely therethrough. The base reticulated material of the patent is preferably "felted" in a conventional manner by exposure to heat and pressure to impart a permanent compressed set to the base material, reducing it to a fraction of its original thickness. The degree of compression is referred to as "firmness" which is the inverse of the compressed fraction. The preferred material is compressed to one third its original thickness and thus has a firmness of "3".

The preferred foam is a thermally reticulated, felted, polyester-polyurethane material, No. 03Z50A0090,

sold by FOAMEX, Eddystone, PA. The preferred foam has the following typical physical properties, the values being given for the base foam material before felting: 1.7 lbs./ft.^{3} density; 0.27 inches thickness; 28 lbs./in.^{2} tensile strength; 300% elongation; 0.5 lbs./in.^{2} comprehensive force displacement (CFD) with one minute rest (25%); 97% void volume; and approximately fifty pores per inch as determined by the method disclosed in U.S. military specification MIL-B-83054B (USAF) incorporated by reference.

Either felted and unfelted reticulated polymer foams can be used in the invention. It is believed that porosities of between about 30 and 90 pores per inch (ppi), as measured by the aforesaid method, are useful in this application, depending upon the particular foam and liquid adhesive being used. Porosities of between 30 and 90 ppi correspond to pressure drops of between about 0.5 and 2.7 inches of water while a porosity of about 50 ppi corresponds to a pressure drop of about 0.7 inches of water, as measured by the aforesaid method.

The preferred adhesives to be dispensed are air cured liquids, more particularly polyvinyl alcohol based liquids. However, it is believed that other liquids based upon any of a variety of other well-known adhesives including, in particular, various animal glues, mucilage, starches, dextrins, and vinyl acetates, for example, may be used. Vinyl based adhesives may be

in the form of emulsions. Liquid adhesives with viscosities between about 500 and about 4,500 centipoise are desired and between about 2,500 and about 4,500 centipoise are preferred for dispensing with the preferred device 10 of Figs. 1-4. However, higher and lower viscosities could also be dispensed successfully with the preferred device and the valve can be easily modified to adjust the rate of dispensing liquids of these and greater or lower viscosities, for example, from less than 100 to 10,000 centipoise or more. For example, high density polyethylene is preferred for the retaining ring 12 and linear low density preferred for valve assembly 34 where higher viscosities (about 1,000 centipoise or more) are used. The relatively low spring force from this polyethylene is also believed to lessen stress and wear on the preferred foam forming the cover. However, high density polyethylene is preferred where lower viscosities (about 200 centipoise or less) are used. Of course, it is expected that polyethylenes of other densities and other materials will also be found suitable.

It has been found that use of the preferred reticulated foam material as the cover 30 permits the use of a liquid, air curing adhesive in the dispenser 10 without clogging of the dispenser, even when the cover 30 is left saturated with the liquid adhesive and exposed to air after use. It has been found, at least with vinyl alcohol based adhesives, that such adhesives dry in and on the cover 30 to a relatively brittle layer

or crust, indicated diagrammatically at 70' in the enlarged detail of Fig. 5. The dried adhesive crust appears to provide a liquid adhesive proof and a substantially or essentially air-proof seal or barrier with the retaining ring 12 and mounting ring 52 which prevents further passage of liquid adhesive through the cover and which retards the air curing of adhesive trapped deep within the cover or between the valve body 36 and the cover 30.

It has been found that when encrusted with dried adhesive and pressed against a surface, the preferred cover 30 appears to depress only at and about the point of contact. This flexing action may fracture the dried adhesive or separate it from the foam, or both. In any event, it reopens the pores without tearing the foam. It is believed that physical characteristics of the foam, including its strength, elasticity, thickness and/or porosity contribute to this capability.

As a result, the removable cap 74 may be left off the dispenser 10 for days and even several weeks after use and the dispenser 10 may then be used again in a conventional fashion simply by pressing or pressing and rubbing the cover 30 against a surface sufficiently to fracture crust 70', move the valve body 36 to open the valve and release a new charge of liquid adhesive 70 from the container 14 and, if necessary, work the dried adhesive from the cover 70. If the adhesive is only lightly dried and encrusted, simple repeated pressing of

the cover against a surface may be sufficient to reestablish adhesive flow through the cover. The force required to fracture the crust 70' and release fresh adhesive under these circumstances is not noticeably different from the force required to open the valve during the first use of the device 10. Thicker and/or harder encrustations may require additional rubbing of the cover 30 on the surface, squeezing of the container 14, or both, to force the dried adhesive from the pores and reestablish adhesive flow. This step is facilitated if not positively enabled by the exposure of the foam cover 70 on the dispenser 10 where it can be rubbed and significantly stretched in various directions to break up the dried adhesive and to work the broken dried adhesive to and from the surface of the cover. It has not been found necessary to soak the device 10 in hot water or solvent to dissolve the dried adhesive as is typically required with other, wick type liquid adhesive dispensers employing woven or non-woven fabric covers. Such a soaking may be required even when such other dispensers are left exposed to air only overnight.

It is believed that air curing of adhesive trapped in and beneath the porous cover 30 is only retarded. Curing appears to begin on the exposed surface of the cover 70 and progress inward with time. If left exposed to air for a sufficiently long period of time, it is believed that even the preferred vinyl alcohol based liquid adhesives may cure so thoroughly in and beneath the cover 70 that the preferred dispenser 10

may be rendered unusable unless soaked. However, considerably more protection is afforded in this regard by the present device 10 than has been afforded by existing liquid adhesive daubers.

Fig. 6 depicts an alternate configuration of the valve means. The valve body portion, indicated at 136, of a unified valve assembly 134 includes a cylindrical, upright valve head or release member 141 projecting upwardly from a planar annular surface 142. The latter extends radially outwardly to a conical surface 143 having an angle of about forty-five degrees with respect to the vertical in the figure. Ring 12 is the same as in Fig. 2. Sealing is again provided between surface 143 and the radiused inner surface 28 of web 16 of the retaining ring 12. The cylindrical valve head 141, having less cross sectional area than the legs 41, and the planar annular surface 142, having a greater area than surface 42, provide a larger effective orifice through the valve of Fig. 6 than is provided by the comparable elements in the Fig. 2 valve embodiment to permit even greater or easier liquid flow in the Fig. 6 embodiment for the same valve throw and opening diameter. A preformed metallic ring 152 may be provided with a lip 154 extending into the groove 150. Of course, other retaining ring and valve assembly configurations and different valve throws could be used to provide lesser or greater adhesive flows.

The present invention may be embodied in other specific forms without departing from the spirit or

essential attributes thereof. For example, although the provision of closable valve means is preferred, it is conceivable that the valve means of dauber 10 be eliminated. In addition, a less porous, reticulated foam or a more viscous liquid adhesive and the same reticulated foam might further be used to dispense liquid adhesive directly from the reservoir. It is further suggested that a very weak solution of vinyl alcohol having a relatively low viscosity can be provided in such a dispenser for use in moistening envelopes or tapes with preapplied dry adhesive, to augment the adhesion in the event the preapplied adhesive is of poor quality, insufficient strength, amount, etc. Accordingly, reference should be made to the appended claims, rather than to the foregoing specification as indicating the scope of the invention.

I CLAIM:

1. A liquid adhesive dispenser comprising:

a reservoir of air curing liquid adhesive having a mouth; and

a flexible, porous reticulated polymer foam cover positioned over the mouth and sealed generally with the reservoir around the mouth such that all liquid adhesive dispensed by the dispenser through the mouth must pass through the cover, the cover being exposed on the dispenser to permit contact application of the liquid adhesive.

2. The dispenser of claim 1 further comprising closable valve means in the reservoir mouth for controllably releasing liquid adhesive from the reservoir to the cover.

3. The dispenser of claim 1 wherein the polymer of the reticulated foam cover comprises polyurethane.

4. The dispenser of claim 1 wherein the cover consists of the foam layer.

5. The dispenser of claim 4 wherein the reticulated foam layer is elastic.

6. The dispenser of claim 5 wherein the liquid adhesive comprises vinyl alcohol.

7. The dispenser of claim 1 wherein the liquid adhesive comprises vinyl alcohol.

8. The dispenser of claim 1 wherein the fluid adhesive is selected from the group consisting essentially of vinyl alcohols, vinyl acetates, animal glues, mucilages, starches and dextrins and mixtures thereof.

9. The dispenser of claim 5 wherein the fluid adhesive has a viscosity of about 10,000 centipoise or less.

10. The dispenser of claim 9 wherein the viscosity of the liquid adhesive is between about 1,000 and 7,500 centipoise.

11. The dispenser of claim 9 wherein the reticulated foam layer has between 50 and 90 pores per inch.

12. The dispenser of claim 11 wherein the reticulated foam layer exhibits a pressure drop of between about 0.7 and 2.7 inches of water.

13. The dispenser of claim 9 wherein the reticulated foam layer exhibits a pressure drop of between about 0.7 and 2.7 inches of water.

14. The dispenser of claim 9 wherein the liquid adhesive has a viscosity of between about 2,500 and 4,500 centipoise.

15. The dispenser of claim 1 further comprising an ordinarily closed valve in the reservoir mouth separating the liquid adhesive from the foam cover.

16. The dispenser of claim 15 wherein the valve comprises a retaining ring sealingly received in the reservoir mouth and receiving an outer peripheral portion of the foam cover, the retaining ring including a generally transversely extending web, the web having a central opening therethrough, a movable valve member projecting through the opening towards the foam cover and at least partially beyond an axial end of the retaining ring receiving the foam cover, and a spring positioned to bias the valve member against the web and towards the foam cover to normally close the central opening.

17. The dispenser of claim 16 wherein the reservoir comprises a flexible, hand held container having the reservoir mouth as its only opening.

18. The dispenser of claim 17 further comprising a substantially rigid ring concentrically located at the mouth of the container spanning the outer peripheral portion of the foam cover which contacts the retaining ring so as to limit compression of the foam

cover against the retaining ring, a portion of the valve member extending through the central opening of the web and axially through a central opening of the rigid ring towards the foam cover.

19. The dispenser of claim 7 further comprising an ordinarily closed valve in the reservoir mouth separating the liquid adhesive in the reservoir from the foam cover.

20. The dispenser of claim 19 wherein the ordinarily closed valve comprises a valve member movably positioned across an opening in the reservoir mouth and a structure projecting from the valve member towards the foam cover, the structure being configured to displace the valve from the opening when the foam cover is deflected inwardly towards the opening.

21. A method of dispensing an air curing liquid adhesive from a reservoir comprising the steps of:

passing liquid adhesive from the reservoir through a flexible, porous, reticulated polymer foam cover generally sealed with the reservoir such that the liquid adhesive passes the cover only by passing through the cover;

curing the liquid adhesive in the foam cover to form a seal of the adhesive preventing further passage of liquid adhesive through the cover;

flexing the foam cover to break the adhesive seal; and

again passing the liquid adhesive from the reservoir through the foam cover and broken adhesive seal.

22. The method of claim 21 wherein the flexible porous cover consists of the reticulated polymer foam.

23. The method of claim 22 wherein the polymer of the reticulated foam comprises polyurethane.

24. The method of claim 21 wherein the fluid adhesive is selected from the group consisting essentially of vinyl alcohols, vinyl acetates, animal glues, mucilages, starches and dextrins and mixtures thereof.

25. The method of claim 21 wherein the liquid adhesive has a viscosity of about 10,000 centipoise or less.

26. The method of claim 25 wherein the porous cover consists of the layer of reticulated polymer foam.

27. The method of claim 21 wherein said passing step and said again passing step each comprises the step of momentarily opening an ordinarily closed valve between the reservoir and the foam cover to release liquid adhesive from the reservoir to the foam cover.

28. The method of claim 27 wherein the step of flexing further comprises the step of pressing the foam cover against a resistive surface to simultaneously stretch a portion of the foam not being contacted and expand pores of the foam in the non-contacted portion and displace a valve member from an opening between the liquid adhesive in the reservoir and the foam cover.

29. The method of claim 28 wherein the reservoir comprises a hand held flexible container and wherein the step of again passing further comprises the step of squeezing the container to pressurize the liquid adhesive in the reservoir while the ordinarily closed valve is being opened to force liquid adhesive through the foam cover and the dried adhesive layer.

30. The method of claim 27 wherein the drying step further comprises exposing the foam cover soaked with liquid adhesive to air for at least twenty-four hours.

1/1

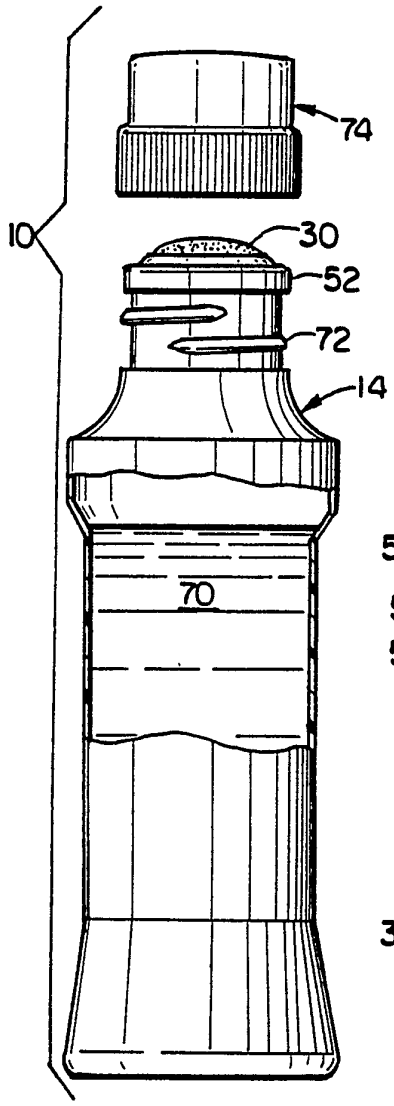

FIG. 1

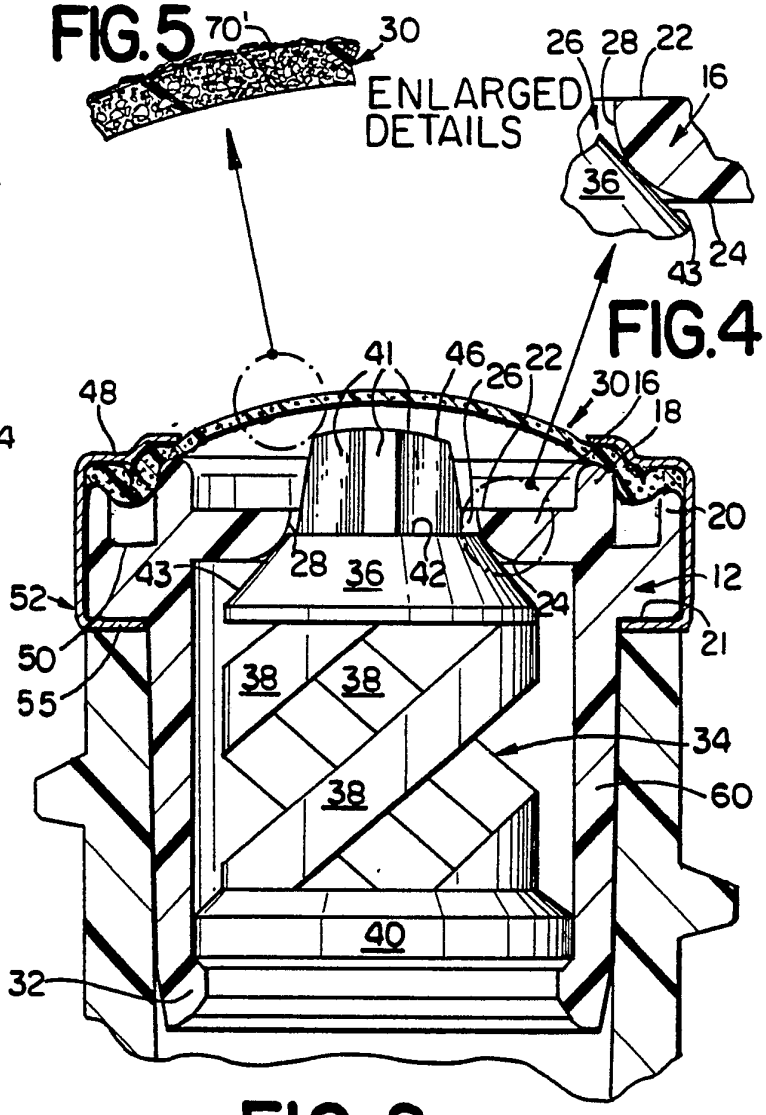

FIG. 5

FIG. 4

FIG. 2

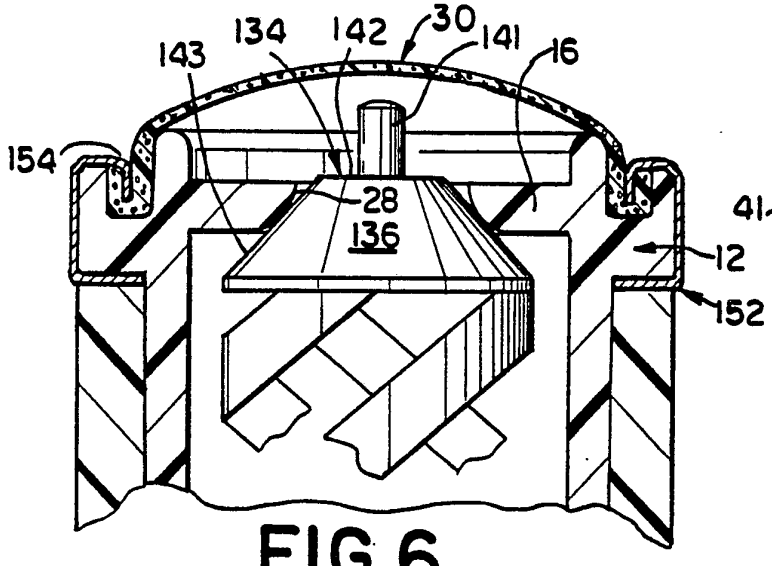

FIG. 6

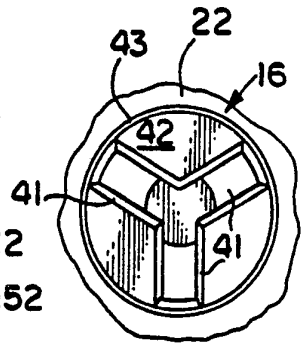

FIG. 3

INTERNATIONAL SEARCH REPORT

International application No.
PCT/US92/04533

A. CLASSIFICATION OF SUBJECT MATTER

IPC(5) :B05D 1/28; B05C 17/00
US CL :401/206
According to International Patent Classification (IPC) or to both national classification and IPC

B. FIELDS SEARCHED

Minimum documentation searched (classification system followed by classification symbols)

U.S. :

Documentation searched other than minimum documentation to the extent that such documents are included in the fields searched

Electronic data base consulted during the international search (name of data base and, where practicable, search terms used)

C. DOCUMENTS CONSIDERED TO BE RELEVANT

Category*	Citation of document, with indication, where appropriate, of the relevant passages	Relevant to claim No.
Y	US, A, 3,351,417 (SCHWARTZMAN) 07 November 1967, See entire document.	1-8,15-17, 19-24,27-30
Y	US, A, 4,762,433 (BERGESON, ET AL.) 09 August 1988, See column 4, line 40.	1-8,15-17, 19-24,27-30
Y	US, A, 3,830,573 (SCHWARTZMAN) 20 August 1974, See column 1, lines 2 and 3 & column 2 lines 2 and 3.	1-8,15-17, 19-24,27-30
Y	US, A, 3,481,678 (SCHWARTZMAN) 02 December 1969, See column 1, line 33.	1-8,15-17, 19-24,27-30
Y	US, A, 3,570,396 (SCHWARTZMAN) 16 March 1971, See figures 6 and 8.	18
Y	US, A, 3,175,025 (GEEN, ET AL.) 23 March 1965, See entire document.	25,26,9-14
Y	US, A, 3,565,294 (SCHWARTZMAN) 23 Febraury 1971, See column 1, lines 35-42.	25,26,9-14

☐ Further documents are listed in the continuation of Box C. ☐ See patent family annex.

*	Special categories of cited documents:	"T"	later document published after the international filing date or priority date and not in conflict with the application but cited to understand the principle or theory underlying the invention
"A"	document defining the general state of the art which is not considered to be part of particular relevance	"X"	document of particular relevance; the claimed invention cannot be considered novel or cannot be considered to involve an inventive step when the document is taken alone
"E"	earlier document published on or after the international filing date	"Y"	document of particular relevance; the claimed invention cannot be considered to involve an inventive step when the document is combined with one or more other such documents, such combination being obvious to a person skilled in the art
"L"	document which may throw doubts on priority claim(s) or which is cited to establish the publication date of another citation or other special reason (as specified)	"&"	document member of the same patent family
"O"	document referring to an oral disclosure, use, exhibition or other means		
"P"	document published prior to the international filing date but later than the priority date claimed		

Date of the actual completion of the international search 17 AUGUST 1992	Date of mailing of the international search report 23 SEP 1992
Name and mailing address of the ISA/ Commissioner of Patents and Trademarks Box PCT Washington, D.C. 20231 Facsimile No. NOT APPLICABLE	Authorized officer STEVEN A. BRATLIE Telephone No. (703) 308-2669

Form PCT/ISA/210 (second sheet)(July 1992)★