May 9, 1933. W. E. BENSON 1,907,713

CONTAINER DISPENSER

Filed June 26, 1930

Fig. 1

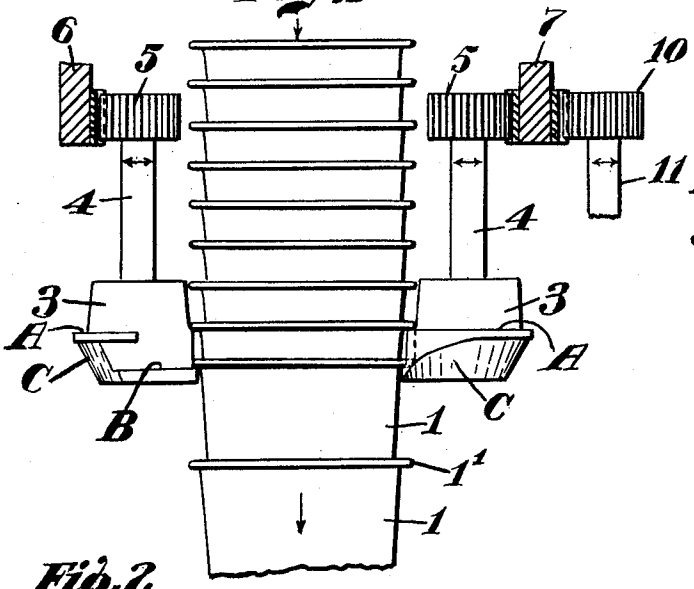

Fig. 10

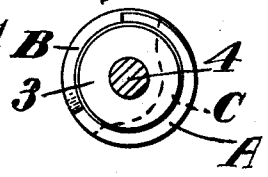

Fig. 11

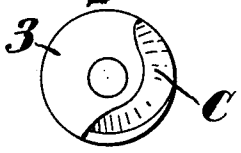

Fig. 2

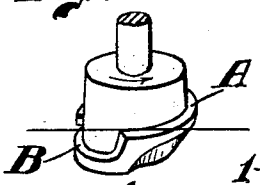

Fig. 3

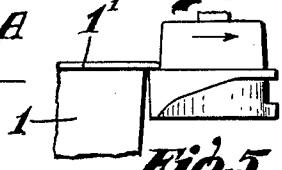

Fig. 4

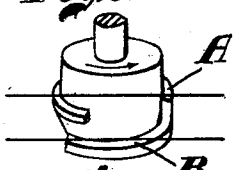

Fig. 5

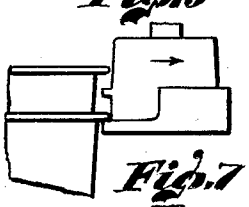

Fig. 6

Fig. 7

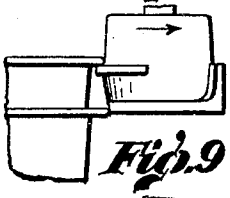

Fig. 8

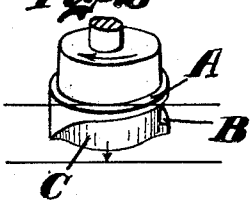

Fig. 9

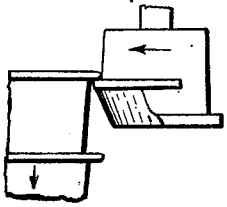

Fig. 12

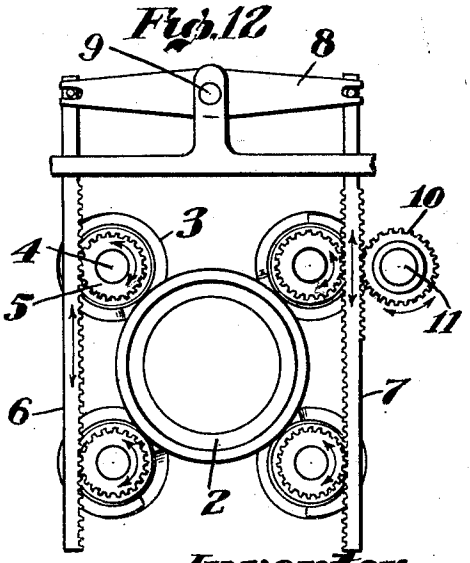

Inventor
William E. Benson

Ellis Spear Jr.

By Attorney

Patented May 9, 1933 1,907,713

UNITED STATES PATENT OFFICE

WILLIAM E. BENSON, OF BOSTON, MASSACHUSETTS, ASSIGNOR TO KALIX CUP COMPANY, OF WEST CHELMSFORD, MASSACHUSETTS, A CORPORATION OF MASSACHUSETTS

CONTAINER DISPENSER

Application filed June 26, 1930. Serial No. 463,934.

In the dispensing of nested articles, such as paper cups or like containers, much difficulty has been experienced in getting a positive separation and prompt release of the nested container. Where the dispenser is a coacting unit in an automatic packaging machine, failure or even delay in release becomes serious as affecting subsequent operations which are dependent on the presence of the cup. For example, in packaging ice cream or other semi-fluid products discharged by timed mechanism, failure to present the cup to be filled at the proper time not only wastes the charge, but the spillage is almost certain to damage the other packages on the machine until the machine can be stopped and carefully cleaned.

Certain types of dispensers found satisfactory for individual use as for drinking cups, while advantageous in many ways, have failed when in filling machine combination.

One of these was the worm or screw off dropper type and my present invention relates to an improved dispenser of this type. The usual container is a cup shaped article in which taper is important to permit nesting but having by reason of such taper a wedging tendency most difficult to overcome. Also being usually of flexible or semi-flexible stock there is a lack of dependable dimension on which to base positive mechanical functionings.

My invention contemplates the use of balanced pressures and a minimum of distortions so as to attain a basis of dependable functioning even with such articles as paper cups.

This I accomplish by apparatus of which a characteristic form is shown in the accompanying drawing.

In the drawing:—

Fig. 1 is a view through a series of nested cups or other packages in a filling machine equipped with cup dispensing mechanism in accordance with my present invention.

Figs. 2 to 9 inclusive are diagrammatic indications of the action of my cup dispensing mechanism.

Fig. 10 is a top view of one of the dispensing units.

Fig. 11 is a bottom view thereof.

Fig. 12 is a plan view particularly showing the means for imparting operating movement to the dispensing units.

In a machine of the character contemplated herein, the receptacles, as for example, a nested column of cups 1, are contained in any suitable cup chute as indicated at 2 in Fig. 12, and the lowermost cups in the column are successively fed to an intermittently rotating table which carries them first beneath the material hopper where each receives a charge of the filling material, as ice cream, and afterwards to a capping station where each filled cup is closed by a cap.

While particularly intended for use in a machine of this type, my invention, however, is not confined to such use, but may be used in connection with the dispensing of any nested column of containers. Regardless of the type of machine or container used, the containers are fed by positive withdrawal of the outermost container in the stack. Where the stack is vertical, such outermost container is the lowermost container in the column.

Considering the vertical column as typical, such withdrawal may be effected conveniently by means of a series of rotating dispensing units 3 between which, as shown in Fig. 12, the cup column is centered. Preferably, there are four of these units arranged symmetrically about the cup column although my invention is not limited to any specific number of units. In practice, however, I have found that with the symmetrical arrangement of four units excellent results are obtained.

The units 3 are mounted for operating movement relative to the cup column and driven in any suitable manner. Such movement may be either a continuous rotary movement or an oscillating movement. For the purposes of this application, I have shown the units 3 as oscillating but this showing is only illustrative and in no way limiting, as equally good results are obtained when the units are continuously rotated. For example, each unit may be mounted upon a shaft 4 which is provided with a gear 5 meshing with racks 6 and 7 which are yoked together as at 8 for pivotal movement about a pivot 9 and are actuated as a unit from any suitable

drive. The rack 7 may have a double series of rack teeth, the inner series meshing with the gears 5 of the two adjacent units 3 and the outer series meshing with a gear 10 on a drive shaft 11, which is adapted to be either oscillated or continuously rotated from any suitable driving source.

The structure of the individual units 3 is detailed in Figs. 10 and 11 and their action is indicated diagrammatically in Figs. 2 to 9 inclusive.

Referring to these figures it will be noted that each unit presents supporting surfaces in the nature of cam surfaces adapted for underlying bearing beneath the projecting flanges 1′ of the cups 1 in the cup column. Such cam surfaces include a generally horizontally disposed surface or ledge A on which the rolled edge 1′ of the lowermost cup in the column initially rests. This is shown diagrammatically in Figs. 2 and 3. During the first phase of revolution of the units 3 in the direction of the arrow in Figs. 2 and 3 which phase of revolution may be through an arc of about 90°, the lowermost cup in the column is urged through the pressure of the cups thereabove in the column downwardly and outwardly so that as the units 3 revolve through this arc of approximately 90° the supporting ledge A is removed from beneath the rolled edge of said lowermost cup and said cup drops by gravity, assisted by the pressure of the column of cups, onto the ledge B of the units 3. This results from the fact that the ledge A does not completely encircle the unit 3, but on the contrary merges into the ledge B which is disposed below the plane of the ledge A.

The rolled edge of the lowermost cup is therefore now supported upon the ledge B and continues to remain on such ledge through the next phase of revolution of the units 3. This phase is an arc of approximately 90° as shown in Figs. 4 and 5 which carries the units 3 to the position shown in Figs. 6 and 7. In such position the rolled edge of the lowermost cup has passed off the ledge B and is about to be freed of the units 3. This results from the fact that the ledge B does not completely encircle the unit 3, but instead terminates in a downwardly and outwardly bevelled face C which permits full release of the lowermost cup. The relieved or cut away portion C is disposed at the lowermost portion of the unit 3 and extends circumferentially of the unit for a sufficient distance to insure full release of the lowermost cup when the units 3 reach the position shown in Figs. 6 and 7 at which position they are approximately at the end of their arc in the direction of the arrows in these figures, having now completed approximately a complete revolution and are about to reverse their direction of rotation as shown in Figs. 8 and 9.

During the rotation of the units 3 to the position of Figs. 6 and 7 the cup is subjected to a desirable squeezing action between the several units 3 effective to compress the cup and overcome any tendency of the cups to adhere to each other. This is particularly troublesome in the case of paraffined cups. The paraffine tends to cause the cups to adhere to one another so that they do not drop freely by gravity. This is prevented by the units 3 which compresses the cup and breaks any adhesion tendency, and results from the fact that the effective distance between the several units gradually decreases and this decrease pinches or squeezes the cup, deforming it slightly so that when released by the units 3 the inherent resiliency of the cup tends to cause it to spring away from the surface C. With the parts in the position of Figs. 6 and 7 however, the ledge A has again been rotated in position to engage the rolled edge of the next uppermost cup in the stack. In this position therefore the lowermost cup in the stack is about to be freed of the units 3 and the next uppermost cup is about to be separated from the cup column.

Where the units 3 are oscillated, it is necessary for them to return themselves to the position of Figs. 2 and 3 in order to fully release the lowermost cup and assume the discharge of the cup next above. This return is indicated in Figs. 8 and 9 wherein the units 3 are shown as having reversed their direction of rotation.

During such reverse rotation the cup edge is in bearing on the surface C. This surface may be at any desired angle but is preferably at about an angle of 30°.

In practice the distance between the surfaces A and B is slightly less than the distance between the rolled edges of two nested cups so that the surface A comes in contact with the edge of one cup just prior to the surface B releasing the edge of the next lower cup.

The means whereby the units 3 are alternately revolved in opposite directions may be variously constructed. As shown I use a rack and pinion drive but obviously such drive may be a chain drive, an internal gear drive or in fact any other familiar form of drive whether continuous or reversible.

Similarly, the construction and relation of the dispensing units 3 may be variously modified according to the particular type of cup or dispensing machine. Where the units 3 are continuously rotated, the action is the same as where they are oscillated.

These and various other modifications in structure and use may all be resorted to without departing from the spirit and scope of my invention as defined by the appended claims.

What I therefore claim and desire to secure by Letters Patent is:

1. In an article dispenser, a stack compris-

ing a column of nested articles, a series of dispensing units disposed symmetrically about the stack, each unit comprising a rotatable member having a plurality of merging surfaces disposed on different lateral faces thereof and on planes vertically spaced from each other, said column being supported in the initial phase of rotation by the uppermost surface from which it passes to the second surface during the second phase of rotation, the lowermost article of said column passing from said second named surface and being discharged and the second lowermost article contacting and supported by said first named surface during a third phase of rotation of said member the portions of said units above said first surface and above said second surface being outwardly beveled to compress each article as it passes thereover so as to overcome any tendency of the same to adhere to the stack.

2. In an article dispenser, a stack comprising a column of nested articles, a series of dispensing units disposed symmetrically about the stack, each unit comprising a rotatable member having a plurality of merging surfaces disposed on different lateral faces thereof and on planes vertically spaced from each other a distance less than the distance between two nested articles said column being supported in the initial phase of rotation by its lowermost articles which bears on the uppermost surface and from which it passes to the second surface during the second phase of rotation at which time the second lowermost article in said column overlies but does not contact the first named surface, the lowermost article of said column passing from said second named surface and being discharged and the second lowermost article contacting and its superposed column supported by said first named surface during a third phase of rotation of said member, the portions of said member above said first surface and above said second surface being outwardly beveled to compress said articles as they pass thereover and said member adjacent said second surface and below said first surface being beveled and merging with said second surface to permit full release of said lowermost article as it passes from said second surface.

3. In an article dispenser, a stack comprising a column of nested articles, a series of dispensing units disposed about the stack each unit comprising a rotatable member having a spirally disposed portion partially encircling said member, a second spirally disposed portion vertically spaced from said first portion and merging therewith and further partially encircling said member, the portions of said members above said spirals being outwardly beveled to compress said articles as they pass thereover and said second portion terminating in a downwardly and inwardly beveled face, said column of nested articles being first supported by means of the lowermost member bearing on said first peripheral portion and upon rotation of said member passing to said second peripheral portion, the second lowermost article in said column engaging the first peripheral portion and supporting the column thereon as the lowermost article passes from said second peripheral portion to said beveled face from which it is ejected on further rotation of said member.

4. In an article dispenser, a stack comprising a column of nested articles, a series of dispensing units disposed symmetrically about the stack, each unit comprising a rotatable member having container supporting means in the form of an interrupted spiral having broken but merging leads, the uppermost lead effective during the initial phase of rotation of said member to engage the lowermost article and thereby support said column, said lower lead effective during a subsequent phase of rotation to engage said article with supported column as it passes thereonto from said first lead, the portions of said units above said leads being outwardly beveled to compress said articles as it passes thereover and a downwardly and inwardly beveled portion beneath said first lead and merging with said second lead and effective in a still subsequent phase of rotation of the unit to cause ejection of the lowermost article as it passes from said second lead, said leads being vertically spaced from each other a distance less than the distance between a pair of nested articles so that the second above article with supported column simultaneously engages and is supported by said first lead as said lowermost article passes from said second lead.

In testimony whereof I affix my signature.

WILLIAM E. BENSON.