W. ZIMMER.

PATTERN PUNCH.

APPLICATION FILED AUG. 23, 1919.

1,335,632. **Patented Mar. 30, 1920.**

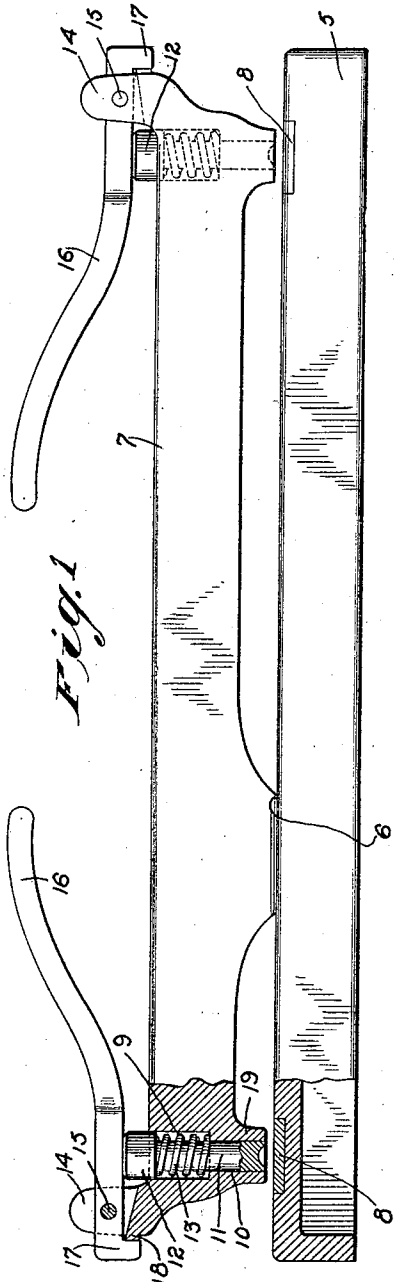

Fig. 1

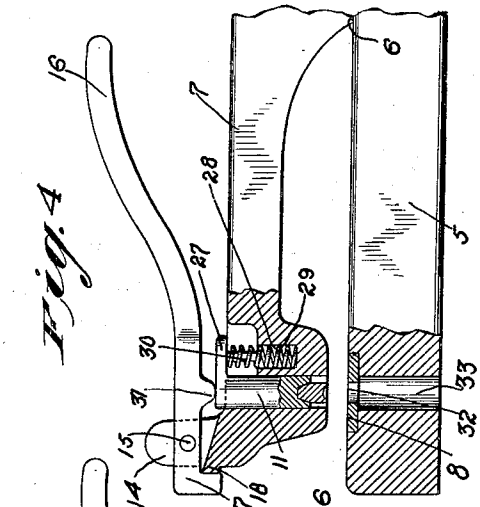

Fig. 4

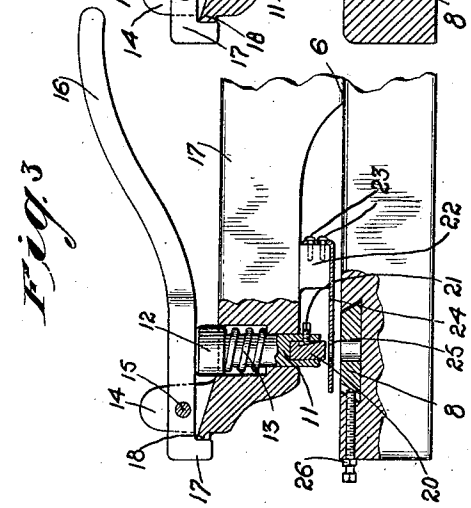

Fig. 3

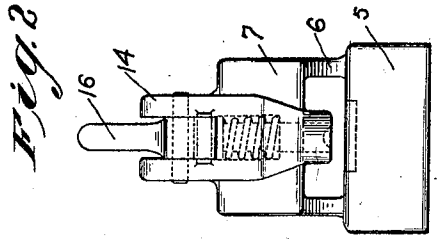

Fig. 2

WITNESSES

H. C. Hebig

P. H. Pattison

INVENTOR

WILLIAM ZIMMER

BY

ATTORNEYS

UNITED STATES PATENT OFFICE.

WILLIAM ZIMMER, OF NEW YORK, N. Y.

PATTERN-PUNCH.

1,335,632. Specification of Letters Patent. Patented Mar. 30, 1920.

Application filed August 23, 1919. Serial No. 319,321.

To all whom it may concern:

Be it known that I, WILLIAM ZIMMER, a citizen of the United States, and a resident of the city of New York, Corona, borough of Queens, in the county of Queens and State of New York, have invented a new and Improved Pattern-Punch, of which the following is a full, clear, and exact description.

This invention relates to new and useful improvements in punches and pertains more particularly to small hand-operated punches especially adapted for punching patterns.

The primary object of the invention is to provide a device while portable, it has at the same time sufficient weight to prevent movement thereof relatively to its support during the punching operation.

A further object of the invention is to construct a device of this character which is both simple in construction and cheap of manufacture.

Referring to the drawings—

Figure 1 is a side elevation of a punch constructed in accordance with the present invention, said view being partly in section;

Fig. 2 is an end view thereof;

Fig. 3 is a detail sectional view of a modified form of the invention;

Fig. 4 is a detail sectional view of a still further modified form of the invention.

Referring more particularly to the drawings, the device comprises a base 5, secured to the upper face of which, as at 6, is an arm 7. This arm 7 is rigidly secured to the base 5, in any desired manner, preferably by casting the same integral therewith, and said arm 7 is so shaped that its opposite ends are in spaced relation with the top face of the base 5.

In the form shown in Figs. 1 and 2, the base is provided with soft metal inserts 8, and overlying each of the inserts are the end portions of the arm 7, each of which is cut out in the form of a circular recess 9, the lower portion of which terminates in a constricted passage 10. Mounted for reciprocal movement in the constricted passage 10, is a punching element 11, which is provided with an enlarged head 12, the diameter of which is equal to the diameter of the recess 9. The outer face of the head 12 engages the inner wall of the recess to aid in guiding the punch in its reciprocal movement.

Interposed between the under face of the head 12 and the bottom wall of the recess 9, is a coil spring 13, the purpose of which will be hereinafter described. Cast integral with the free extremities of the arm 7, are spaced lugs 14, and pivotally mounted between said spaced lugs 14, as by a pin or the like 15, is an operating handle 16. This operating handle 16 has its free outer end bent at right angles as designated by the reference character 17, said portion 17 being adapted to engage the outer end face 18 of the arm 17.

It is to be understood that the above described mechanism is provided on each end of the arm 7, the operation of said mechanism being as follows: When the handle 16 is depressed, the punch 11 operates on the material which is positioned in the narrow space between the inserts 8 and the downwardly-projecting portion 19 of the arm 7. When the handle is released, the spring 13 serves to return the punch to the position shown in Fig. 1 which action returns the handle to its normal position, the right-angular end 17 thereof engaging the outer face 18 of the arm to limit the pivotal movement of the handle.

In the form of the invention shown in Fig. 3, the punch 11 is provided with a removable cutting member 20, which is secured in place by means of a set screw 21. Projecting downwardly from the under face of the arm 7, is a rigid projection 22, and secured to said projection by means of screws or the like 23, and projecting under the punch member 11, is a stripper plate 24, said stripper plate being provided with an opening 25 for receiving the cutting element 20 of the punch. The inserts 8 in this form of the invention, are removably secured in place by means of a threaded bolt 26.

In this form of the invention, when the operating handle 16 is depressed, the cutting element 20 passes through the opening 25 of the stripper 24, and operates upon the material in the manner heretofore described. Upon the return movement of the punch 11, the stripper plate 24 serves to remove the material operated upon from the cutting element 20.

In the form of the invention shown in Fig. 4, the punch 11 is provided with a right-angular head portion 27, and mounted in a recess 28 adjacent the recess through which the punch 11 operates, is a coil spring 29, the upper end of which surrounds a projection 30 extending from the under side of

the head portion 27. The operating lever 16 is provided with a projection 31, which is adapted to engage the punch member 11 and depress the same as the lever 16 is moved about its pivot point 15.

Each insert 8, in the embodiment of the invention disclosed in Fig. 4, is provided with a perforation 32, which communicates with a passageway 33 extending through the base portion 5, the punched-out material passing through the passageway upon withdrawal of the punching element from engagement with the material operated upon.

A punch constructed in accordance with the present invention is preferably formed from cast material, and while the same is readily portable from place to place, it has sufficient weight to prevent accidental displacement during the punching operation.

Having thus described the invention, what is claimed as new is:

A punch comprising a base, an arm carried by the base and having its end spaced with respect thereto, a punching element resiliently mounted in each end of said arm, a lever pivotally secured to each end of said arm and adapted to operate its respective punching element, and a right-angular extension formed integral with each of said levers and adapted to engage its respective end of the arm to limit the movement of its respective lever about its pivotal point.

WILLIAM ZIMMER.