(12) INTERNATIONAL APPLICATION PUBLISHED UNDER THE PATENT COOPERATION TREATY (PCT)

(19) World Intellectual Property Organization
International Bureau

(43) International Publication Date
13 October 2022 (13.10.2022)

WIPO | PCT

(10) International Publication Number
WO 2022/216710 A1

(51) International Patent Classification:
*H04W 72/12* (2009.01) *H04L 5/00* (2006.01)
*H04W 72/14* (2009.01) *H04B 7/06* (2006.01)
*H04W 72/04* (2009.01) *H04L 1/08* (2006.01)
*H04L 1/00* (2006.01)

(21) International Application Number:
PCT/US2022/023482

(22) International Filing Date:
05 April 2022 (05.04.2022)

(25) Filing Language: English

(26) Publication Language: English

(30) Priority Data:
63/171,508 06 April 2021 (06.04.2021) US

(71) Applicant: **INTEL CORPORATION** [US/US]; 2200 Mission College Boulevard, Santa Clara, California 95054 (US).

(72) Inventors: **DAVYDOV, Alexei**; Lenin Ave 28/11-40, Nizhny Novgorod, 603132 (RU). **XIONG, Gang**; 2402 NW Benson Ln, Portland, Oregon 97229 (US). **MONDAL, Bishwarup**; 750 Pradera Way, San Ramon, California 94583 (US). **HAN, Dong**; 705 Santa Cecilia Ter, Sunnyvale, California 94085 (US).

(74) Agent: **PARKER, Wesley E.** et al.; Schwabe, Williamson & Wyatt, P.C., 1211 SW 5th Avenue, Suite 1600, Portland, Oregon 97204 (US).

(81) Designated States *(unless otherwise indicated, for every kind of national protection available)*: AE, AG, AL, AM, AO, AT, AU, AZ, BA, BB, BG, BH, BN, BR, BW, BY, BZ, CA, CH, CL, CN, CO, CR, CU, CZ, DE, DJ, DK, DM, DO, DZ, EC, EE, EG, ES, FI, GB, GD, GE, GH, GM, GT, HN, HR, HU, ID, IL, IN, IR, IS, IT, JM, JO, JP, KE, KG, KH, KN, KP, KR, KW, KZ, LA, LC, LK, LR, LS, LU, LY, MA, MD, ME, MG, MK, MN, MW, MX, MY, MZ, NA, NG, NI, NO, NZ, OM, PA, PE, PG, PH, PL, PT, QA, RO, RS, RU, RW, SA, SC, SD, SE, SG, SK, SL, ST, SV, SY, TH, TJ, TM,

WO 2022/216710 A1

(54) Title: TECHNIQUES FOR MULTI-TRANSMISSION-RECEPTION POINT (TRP) BASED UPLINK CHANNEL TRANSMISSION

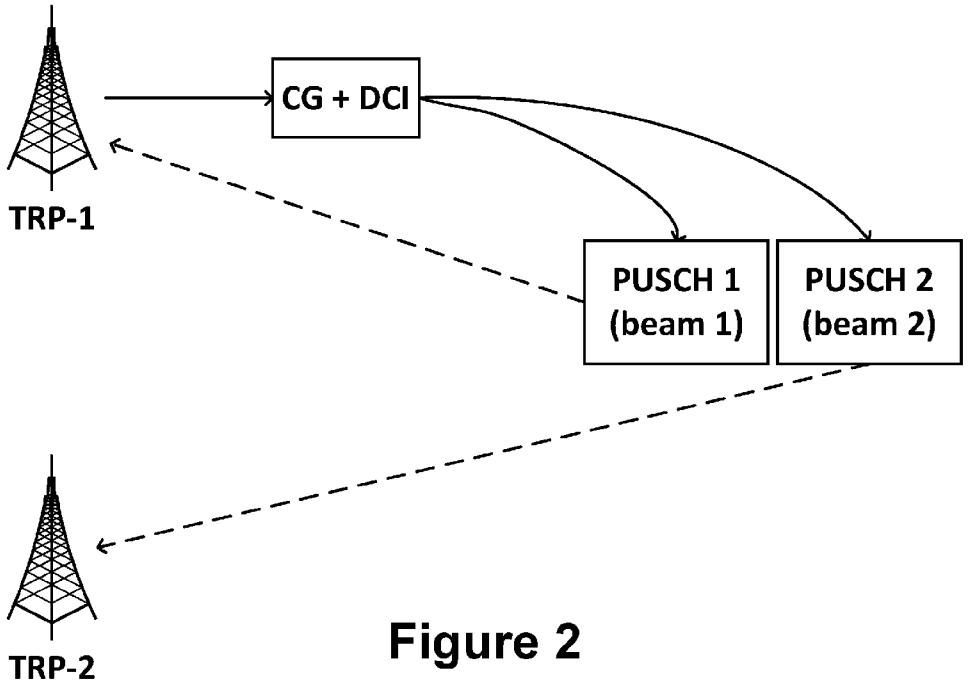


Figure 2

(57) Abstract: Various embodiments herein provide techniques for physical uplink shared channel (PUSCH) transmission with repetitions to multiple transmission-reception points (TRPs). For example, embodiments include enhancement of channel state information (CSI) (e.g., aperiodic CSI (A-CSI) and/or semi-persistent CSI (SP-CSI)), configured grant (CG)-PUSCH, uplink power control (ULPC), beam switching gap, and phase tracking reference signal (PTRS) - demodulation reference signal (DMRS) association, among other issues for multi-TRP PUSCH repetition. Other embodiments may be described and claimed.

*[Continued on next page]*

TN, TR, TT, TZ, UA, UG, US, UZ, VC, VN, WS, ZA, ZM, ZW.

(84) **Designated States** *(unless otherwise indicated, for every kind of regional protection available)*: ARIPO (BW, GH, GM, KE, LR, LS, MW, MZ, NA, RW, SD, SL, ST, SZ, TZ, UG, ZM, ZW), Eurasian (AM, AZ, BY, KG, KZ, RU, TJ, TM), European (AL, AT, BE, BG, CH, CY, CZ, DE, DK, EE, ES, FI, FR, GB, GR, HR, HU, IE, IS, IT, LT, LU, LV, MC, MK, MT, NL, NO, PL, PT, RO, RS, SE, SI, SK, SM, TR), OAPI (BF, BJ, CF, CG, CI, CM, GA, GN, GQ, GW, KM, ML, MR, NE, SN, TD, TG).

**Declarations under Rule 4.17:**

— *of inventorship (Rule 4.17(iv))*

**Published:**

— *with international search report (Art. 21(3))*

# TECHNIQUES FOR MULTI- TRANSMISSION-RECEPTION POINT (TRP) BASED UPLINK CHANNEL TRANSMISSION

## CROSS REFERENCE TO RELATED APPLICATION

The present application claims priority to U.S. Provisional Patent Application No. 63/171,508, which was filed April 6, 2021.

## FIELD

Various embodiments generally may relate to the field of wireless communications. For example, some embodiments may relate to techniques for multi- transmission-reception point (TRP) uplink transmission.

## BACKGROUND

In the current 3GPP specification, physical uplink shared channel (PUSCH) repetition is only supported based on a single transmission-reception point (TRP). However, this can be a bottleneck for the reliability of the system when multi-TRP based physical downlink shared channel (PDSCH) repetition is adopted.

## BRIEF DESCRIPTION OF THE DRAWINGS

Embodiments will be readily understood by the following detailed description in conjunction with the accompanying drawings. To facilitate this description, like reference numerals designate like structural elements. Embodiments are illustrated by way of example and not by way of limitation in the figures of the accompanying drawings.

Figure 1 illustrates a radio resource control (RRC) configuration including a parameter for configured grant (CG) physical uplink shared channel (PUSCH).

Figure 2 illustrates a Type-2 single-CG based multi-TRP (mTRP) PUSCH repetition, in accordance with various embodiments.

Figures 3A and 3B illustrate PUSCH repetitions and beam switching gaps for Type-B PUSCH repetition without and with invalid symbols, respectively, in accordance with various embodiments.

Figure 4 illustrates an example of configuration information for power control parameters, in accordance with various embodiments.

Figure 5 schematically illustrates a wireless network in accordance with various embodiments.

Figure 6 schematically illustrates components of a wireless network in accordance with various embodiments.

Figure 7 is a block diagram illustrating components, according to some example embodiments, able to read instructions from a machine-readable or computer-readable medium

(e.g., a non-transitory machine-readable storage medium) and perform any one or more of the methodologies discussed herein.

Figure 8 depicts an example procedure for practicing the various embodiments discussed herein.

Figure 9 depicts another example procedure for practicing the various embodiments discussed herein.

## DETAILED DESCRIPTION

The following detailed description refers to the accompanying drawings. The same reference numbers may be used in different drawings to identify the same or similar elements. In the following description, for purposes of explanation and not limitation, specific details are set forth such as particular structures, architectures, interfaces, techniques, etc. in order to provide a thorough understanding of the various aspects of various embodiments. However, it will be apparent to those skilled in the art having the benefit of the present disclosure that the various aspects of the various embodiments may be practiced in other examples that depart from these specific details. In certain instances, descriptions of well-known devices, circuits, and methods are omitted so as not to obscure the description of the various embodiments with unnecessary detail. For the purposes of the present document, the phrases "A or B" and "A/B" mean (A), (B), or (A and B).

Various embodiments herein provide techniques for PUSCH transmission with repetitions to multiple TRPs. For example, embodiments include enhancement of channel state information (CSI) (e.g., aperiodic CSI (A-CSI) and/or semi-persistent CSI (SP-CSI)), configured grant (CG)-PUSCH, uplink power control (ULPC), beam switching gap, and phase tracking reference signal (PTRS) – demodulation reference signal (DMRS) association, among other issues for multi-TRP PUSCH repetition. Embodiments may increase the robustness of the PUSCH transmission under current specification.

In the current specification, PUSCH repetition is only supported based on a single-TRP which can be a bottleneck for the reliability of whole system when multi-TRP based PDSCH repetition is adopted. Especially in Frequency Range 2 (FR2) (as defined by 3GPP), when a link between a user equipment (UE) and a TRP is affected by blockage, the PUSCH repetition based on single-TRP would not be reliable anymore.

However, when repetitive transmissions are performed across multiple links between a UE and multiple TRPs, such repetition can be more reliable due to macro diversity especially when the blockage exists. Hence, multi-TRP based PUSCH repetition may be used in accordance with various embodiments, with transmission of PUSCH repetitions targeting two or more TRPs. The

multi-TRP PUSCH repetitions may increase the robustness of the PUSCH transmission to potential blockage of the channel.

Various embodiments herein provide enhancements to aspects of the single-TRP based framework to enable multi-TRP based PUSCH repetition. For example, embodiments provide techniques for multi-TRP based PUSCH transmission with respect to CSI (e.g., A-CSI and/or SP-CSI), beam switching gap, configured grant (CG), and uplink power control (ULPC), among other issues.

**Type-2 CG PUSCH single-TRP/multi-TRP dynamic switching.**

In current specification, single-TRP based PUSCH repetitions can be schemed dynamically by downlink control information (DCI), semi-statically by radio resource control (RRC) (Type-1 CG PUSCH), or semi-persistently by RRC and DCI (Type-2 CG PUSCH). To be backward compatible, multi-TRP based PUSCH repetitions should also support the aforementioned three scheduling mechanisms. For example, the transmission scheme may support CG PUSCH transmission towards M-TRPs using a single CG configuration and support dynamic switching between single-TRP and multi-TRP operation for single-DCI based multi-TRP PUSCH repetition scheme.

It is stated in Clause 6 of 3GPP Technical Standard (TS) 38.214 V16.5.0 that "the configured grant Type 1 PUSCH transmission is semi-statically configured to operate upon the reception of higher layer parameter of *configuredGrantConfig* including *rrc-ConfiguredUplinkGrant* without the detection of an UL grant in a DCI" and that "the CG Type 2 PUSCH transmission is semi-persistently scheduled by an UL grant in a valid activation DCI according to Clause 10.2 of [6, TS 38.213] after the reception of higher layer parameter *configuredGrantConfig* not including *rrc-ConfiguredUplinkGrant*".

Thus, to enable multi-TRP CG PUSCH repetition, 1) at least a second *srs-ResourceIndicator* and a second *precodingAndNumberOfLayers* may be added to *ConfiguredGrantConfig* for Type-1 CG as shown in Figure 1, and 2) the enhanced DCI for multi-TRP dynamic PUSCH repetition may be used to activate Type 2 CG PUSCH repetitions.

Moreover, since SRS resource indicator (SRI) and precoding and number of layers are indicated in DCI for Type-2 CG, dynamic switching between single-TRP and multi-TRP can also be supported in Type-2 CG by DCI activation as shown in Figure 2, using single-DCI based dynamic switching methods for multi-TRP PUSCH repetition scheme.

**Beam switching gap for PUSCH repetition Type-B**

During multi-TRP based PUSCH transmission, beam switching operation may be performed. According to current RAN4 specification, the transient period is 5μs (if the spatial filter to transmit the beam is known, beams are switched within same panel and UL timing is the same for different UL beams), which may exceed cyclic prefix (CP) duration and may be even comparable to one or multiple orthogonal frequency division multiplexing (OFDM) symbol duration for some subcarrier spacings (SCSs). In some embodiments, the beam switching may be performed to nominal PUSCH repetitions. For Type-A PUSCH repetition, the beam switching gap may be achieved by properly scheduling the length and the starting symbol in a slot. On the other hand, for PUSCH repetition Type-B, the scheduled nominal repetitions are back-to-back. This means if beam switching is performed, a gap interval should be specified to prevent the distortion of received OFDM symbols. Similar to the configuration of DL beam switching gap, the UL beam switching gap can also be configured by a higher layer parameter such as *StartingSymbolOffsetK*. For example, according to the SCS and RAN4 requirement, the next generation Node B (gNB) can determine the length of the beam switching gap, e.g., *StartingSymbolOffsetK*, and configure it to the UE for Type-2 PUSCH repetitions.

In one example, if the UE is configured by the higher layers with a value $\bar{K}$ in *StartingSymbolOffsetK* and with cyclic beam mapping pattern, it shall determine that the first symbol of the (i+1)-th nominal PUSCH repetition starts after $\bar{K}$ symbols from the last symbol of the i-th nominal PUSCH repetition, where i = 1,2,…, *numberofrepetitions*-1, *numberofrepetitions* is the number of scheduled PUSCH repetitions.

If the UE is configured by the higher layers with a value $\bar{K}$ in *StartingSymbolOffsetK* and with sequential beam mapping pattern, it shall determine that the first symbol of the (2i+1)-th nominal PUSCH repetition starts after $\bar{K}$ symbols from the last symbol of the 2i-th nominal PUSCH repetition, where i = 1,2,…, $\lfloor numberofrepetitions/2 \rfloor$, *numberofrepetitions* is the number of scheduled PUSCH repetitions.

Meanwhile, the scenarios where invalid symbols are scheduled during the PUSCH repetition may also be considered. In this scenario, if the length $\bar{L}$ of invalid symbols is no less than value $\bar{K}$ in *StartingSymbolOffsetK,* there is no need to configure beam switching gap. Otherwise, value $\bar{K}$-$\bar{L}$ should be indicated in higher layer parameter *StartingSymbolOffsetK*.

For example, Figures 3A and 3B illustrate PUSCH repetitions and beam switching gaps for Type-B PUSCH repetition without and with invalid symbols, respectively, in accordance with various embodiments.

Therefore, as discussed above, one or more symbols may be reserved for beam switching in Type-B PUSCH repetition.

**Uplink power control for SRS resource set ID configuration**

In last RAN1 104e meeting, it was agreed that up to two power control parameter sets (using *SRI-PUSCH-PowerControl*) can be applied when SRS resources from two SRS resource sets indicated in DCI format 0_1/0_2 for single-DCI based multi-TRP PUSCH repetition schemes. An alternative to link SRI fields to two power control parameters is to add SRS resource set ID in *SRI-PUSCH-PowerControl*, and select *SRI-PUSCH-PowerControl* from *sri-PUSCH-MappingToAddModList* considering the SRS resource set ID. The SRS resource set ID is configured to be 0 or 1 for PUSCH repetition towards the first and the second TRP, respectively. However, it is possible that SRS resource set ID is not configured if single-TRP based PUSCH repetition is scheduled. Thus, in embodiments herein, a default SRS resource set ID, which may be 0, may be defined in *SRI-PUSCH-PowerControl.* See Figure 4.

**Open-loop power control (OLPC) parameter set indication**

In the current specification for single-TRP based transmission, the open-loop power control parameter set indication field is 1 bit when SRI field is present in the DCI. For single-DCI based multi-TRP PUSCH repetition, the OLPC parameter set indication should be enhanced for two PUSCH repetitions towards two TRPs. In some embodiments, 2 bits for the field of OLPC parameter set indication may be used for multi-TRP based PUSCH repetitions, where the first and second bit corresponds to the OLPC parameter associated to the SRI in the first and second SRS resource set, respectively.

**Aperiodic CSI (A-CSI) and semi-persistent CSI (SP-CSI) report**

In current specification, A-CSI should be multiplexed to the first nominal repetition for PUSCH repetition Type-A or the first actual repetition for PUSCH repetition Type-B. In single-TRP based scheme, when the UE is scheduled to transmit a PUSCH repetition Type B with no transport block and with A-CSI or SP-CSI report(s) by a CSI request field on a DCI, the first nominal repetition is expected to be the same as the first actual repetition. Thus, the A-CSI/SP-CSI transmission should be enhanced for multi-TRP based scheme. First, A-CSI/SP-CSI should be transmitted in the two PUSCH repetitions that are towards the two TRPs to increase reliability. Second, both PUSCH repetitions should inherit the principle in current specification, e.g., the nominal repetition length is expected to the same as the first actual repetition length for the first and second beam.

Moreover, in single-TRP based scheme, for PUSCH repetition Type B carrying SP-CSI report(s) without a corresponding PDCCH after being activated on PUSCH by a CSI request field

on a DCI, if the first nominal repetition is not the same as the first actual repetition, the first nominal repetition is omitted.

Therefore, embodiments provide multi-TRP enhancements for this scenario. For example, SP-CSI may be transmitted in the two PUSCH repetitions that are towards the two TRPs to increase reliability. Additionally, or alternatively, if the first actual repetition corresponding the first or the second beam does not have the same length as the nominal repetition, the SP-CSI is skipped.

**PTRS-DMRS association**

In current specification, the PTRS-DMRS association is according to Table 7.3.1.1.2-25 and Table 7.3.1.1.2-26 (shown below) for one and two PTRS ports, respectively, with a maximum of 2 bits DCI field size. In embodiments herein, for maxRank > 2, the PTRS-DMRS association field size may be kept at 2 bits. To be specific, one of the following two options may be used. Option 1 is using the same PTRS-DMRS association for both PUSCH repetitions toward the two TRPs. Option 2 is reducing the resolution of PTRS-DMRS indication with most significant bit (MSB) and least significant bit (LSB) associated to the 2 TRPs.

In embodiments, for the 1 PTRS port case when maxRank = 3 or 4, only the first two DMRS ports may be chosen to associate to PTRS port 0, e.g., Table 7.3.1.1.2-25 is reused, but only value 0 and 1 can be indicated. For the 2 PTRS ports case when maxRank = 3 or 4, one of the PTRS port – DMRS port associations may be fixed (e.g., PTRS port 1 is always associated to DMRS port 2, e.g., the left-hand-side of Table 7.3.1.1.2.26 is reused, the right-hand-side of Table 7.3.1.1.2.26 use value 0 as default for the value of LSB), and the other PTRS port – DMRS port association can be indicated by one bit according to Table 7.3.1.1.2-26 for one PUSCH repetition.

**Table 7.3.1.1.2-25: PTRS-DMRS association for UL PTRS port 0**

| Value | DMRS port |
|---|---|
| 0 | 1st scheduled DMRS port |
| 1 | 2nd scheduled DMRS port |
| 2 | 3rd scheduled DMRS port |
| 3 | 4th scheduled DMRS port |

**Table 7.3.1.1.2-26: PTRS-DMRS association for UL PTRS ports 0 and 1**

| Value of MSB | DMRS port | | Value of LSB | DMRS port |
|---|---|---|---|---|
| 0 | 1st DMRS port which shares PTRS port 0 | | 0 | 1st DMRS port which shares PTRS port 1 |

| | | | | |
|---|---|---|---|---|
| 1 | 2nd DMRS port which shares PTRS port 0 | | 1 | 2nd DMRS port which shares PTRS port 1 |

**SYSTEMS AND IMPLEMENTATIONS**

Figures 5-7 illustrate various systems, devices, and components that may implement aspects of disclosed embodiments.

Figure 5 illustrates a network 500 in accordance with various embodiments. The network 500 may operate in a manner consistent with 3GPP technical specifications for LTE or 5G/NR systems. However, the example embodiments are not limited in this regard and the described embodiments may apply to other networks that benefit from the principles described herein, such as future 3GPP systems, or the like.

The network 500 may include a UE 502, which may include any mobile or non-mobile computing device designed to communicate with a RAN 504 via an over-the-air connection. The UE 502 may be communicatively coupled with the RAN 504 by a Uu interface. The UE 502 may be, but is not limited to, a smartphone, tablet computer, wearable computer device, desktop computer, laptop computer, in-vehicle infotainment, in-car entertainment device, instrument cluster, head-up display device, onboard diagnostic device, dashtop mobile equipment, mobile data terminal, electronic engine management system, electronic/engine control unit, electronic/engine control module, embedded system, sensor, microcontroller, control module, engine management system, networked appliance, machine-type communication device, M2M or D2D device, IoT device, etc.

In some embodiments, the network 500 may include a plurality of UEs coupled directly with one another via a sidelink interface. The UEs may be M2M/D2D devices that communicate using physical sidelink channels such as, but not limited to, PSBCH, PSDCH, PSSCH, PSCCH, PSFCH, etc.

In some embodiments, the UE 502 may additionally communicate with an AP 506 via an over-the-air connection. The AP 506 may manage a WLAN connection, which may serve to offload some/all network traffic from the RAN 504. The connection between the UE 502 and the AP 506 may be consistent with any IEEE 802.11 protocol, wherein the AP 506 could be a wireless fidelity (Wi-Fi®) router. In some embodiments, the UE 502, RAN 504, and AP 506 may utilize cellular-WLAN aggregation (for example, LWA/LWIP). Cellular-WLAN aggregation may involve the UE 502 being configured by the RAN 504 to utilize both cellular radio resources and WLAN resources.

The RAN 504 may include one or more access nodes, for example, AN 508. AN 508 may terminate air-interface protocols for the UE 502 by providing access stratum protocols including RRC, PDCP, RLC, MAC, and L1 protocols. In this manner, the AN 508 may enable data/voice

connectivity between CN 520 and the UE 502. In some embodiments, the AN 508 may be implemented in a discrete device or as one or more software entities running on server computers as part of, for example, a virtual network, which may be referred to as a CRAN or virtual baseband unit pool. The AN 508 be referred to as a BS, gNB, RAN node, eNB, ng-eNB, NodeB, RSU, TRxP, TRP, etc. The AN 508 may be a macrocell base station or a low power base station for providing femtocells, picocells or other like cells having smaller coverage areas, smaller user capacity, or higher bandwidth compared to macrocells.

In embodiments in which the RAN 504 includes a plurality of ANs, they may be coupled with one another via an X2 interface (if the RAN 504 is an LTE RAN) or an Xn interface (if the RAN 504 is a 5G RAN). The X2/Xn interfaces, which may be separated into control/user plane interfaces in some embodiments, may allow the ANs to communicate information related to handovers, data/context transfers, mobility, load management, interference coordination, etc.

The ANs of the RAN 504 may each manage one or more cells, cell groups, component carriers, etc. to provide the UE 502 with an air interface for network access. The UE 502 may be simultaneously connected with a plurality of cells provided by the same or different ANs of the RAN 504. For example, the UE 502 and RAN 504 may use carrier aggregation to allow the UE 502 to connect with a plurality of component carriers, each corresponding to a Pcell or Scell. In dual connectivity scenarios, a first AN may be a master node that provides an MCG and a second AN may be secondary node that provides an SCG. The first/second ANs may be any combination of eNB, gNB, ng-eNB, etc.

The RAN 504 may provide the air interface over a licensed spectrum or an unlicensed spectrum. To operate in the unlicensed spectrum, the nodes may use LAA, eLAA, and/or feLAA mechanisms based on CA technology with PCells/Scells. Prior to accessing the unlicensed spectrum, the nodes may perform medium/carrier-sensing operations based on, for example, a listen-before-talk (LBT) protocol.

In V2X scenarios the UE 502 or AN 508 may be or act as a RSU, which may refer to any transportation infrastructure entity used for V2X communications. An RSU may be implemented in or by a suitable AN or a stationary (or relatively stationary) UE. An RSU implemented in or by: a UE may be referred to as a "UE-type RSU"; an eNB may be referred to as an "eNB-type RSU"; a gNB may be referred to as a "gNB-type RSU"; and the like. In one example, an RSU is a computing device coupled with radio frequency circuitry located on a roadside that provides connectivity support to passing vehicle UEs. The RSU may also include internal data storage circuitry to store intersection map geometry, traffic statistics, media, as well as applications/software to sense and control ongoing vehicular and pedestrian traffic. The RSU may provide very low latency communications required for high speed events, such as crash avoidance,

traffic warnings, and the like. Additionally or alternatively, the RSU may provide other cellular/WLAN communications services. The components of the RSU may be packaged in a weatherproof enclosure suitable for outdoor installation, and may include a network interface controller to provide a wired connection (e.g., Ethernet) to a traffic signal controller or a backhaul network.

In some embodiments, the RAN 504 may be an LTE RAN 510 with eNBs, for example, eNB 512. The LTE RAN 510 may provide an LTE air interface with the following characteristics: SCS of 15 kHz; CP-OFDM waveform for DL and SC-FDMA waveform for UL; turbo codes for data and TBCC for control; etc. The LTE air interface may rely on CSI-RS for CSI acquisition and beam management; PDSCH/PDCCH DMRS for PDSCH/PDCCH demodulation; and CRS for cell search and initial acquisition, channel quality measurements, and channel estimation for coherent demodulation/detection at the UE. The LTE air interface may operating on sub-6 GHz bands.

In some embodiments, the RAN 504 may be an NG-RAN 514 with gNBs, for example, gNB 516, or ng-eNBs, for example, ng-eNB 518. The gNB 516 may connect with 5G-enabled UEs using a 5G NR interface. The gNB 516 may connect with a 5G core through an NG interface, which may include an N2 interface or an N3 interface. The ng-eNB 518 may also connect with the 5G core through an NG interface, but may connect with a UE via an LTE air interface. The gNB 516 and the ng-eNB 518 may connect with each other over an Xn interface.

In some embodiments, the NG interface may be split into two parts, an NG user plane (NG-U) interface, which carries traffic data between the nodes of the NG-RAN 514 and a UPF 548 (e.g., N3 interface), and an NG control plane (NG-C) interface, which is a signaling interface between the nodes of the NG-RAN514 and an AMF 544 (e.g., N2 interface).

The NG-RAN 514 may provide a 5G-NR air interface with the following characteristics: variable SCS; CP-OFDM for DL, CP-OFDM and DFT-s-OFDM for UL; polar, repetition, simplex, and Reed-Muller codes for control and LDPC for data. The 5G-NR air interface may rely on CSI-RS, PDSCH/PDCCH DMRS similar to the LTE air interface. The 5G-NR air interface may not use a CRS, but may use PBCH DMRS for PBCH demodulation; PTRS for phase tracking for PDSCH; and tracking reference signal for time tracking. The 5G-NR air interface may operating on FR1 bands that include sub-6 GHz bands or FR2 bands that include bands from 24.25 GHz to 52.6 GHz. The 5G-NR air interface may include an SSB that is an area of a downlink resource grid that includes PSS/SSS/PBCH.

In some embodiments, the 5G-NR air interface may utilize BWPs for various purposes. For example, BWP can be used for dynamic adaptation of the SCS. For example, the UE 502 can be configured with multiple BWPs where each BWP configuration has a different SCS. When a

BWP change is indicated to the UE 502, the SCS of the transmission is changed as well. Another use case example of BWP is related to power saving. In particular, multiple BWPs can be configured for the UE 502 with different amount of frequency resources (for example, PRBs) to support data transmission under different traffic loading scenarios. A BWP containing a smaller number of PRBs can be used for data transmission with small traffic load while allowing power saving at the UE 502 and in some cases at the gNB 516. A BWP containing a larger number of PRBs can be used for scenarios with higher traffic load.

The RAN 504 is communicatively coupled to CN 520 that includes network elements to provide various functions to support data and telecommunications services to customers/subscribers (for example, users of UE 502). The components of the CN 520 may be implemented in one physical node or separate physical nodes. In some embodiments, NFV may be utilized to virtualize any or all of the functions provided by the network elements of the CN 520 onto physical compute/storage resources in servers, switches, etc. A logical instantiation of the CN 520 may be referred to as a network slice, and a logical instantiation of a portion of the CN 520 may be referred to as a network sub-slice.

In some embodiments, the CN 520 may be an LTE CN 522, which may also be referred to as an EPC. The LTE CN 522 may include MME 524, SGW 526, SGSN 528, HSS 530, PGW 532, and PCRF 534 coupled with one another over interfaces (or "reference points") as shown. Functions of the elements of the LTE CN 522 may be briefly introduced as follows.

The MME 524 may implement mobility management functions to track a current location of the UE 502 to facilitate paging, bearer activation/deactivation, handovers, gateway selection, authentication, etc.

The SGW 526 may terminate an S1 interface toward the RAN and route data packets between the RAN and the LTE CN 522. The SGW 526 may be a local mobility anchor point for inter-RAN node handovers and also may provide an anchor for inter-3GPP mobility. Other responsibilities may include lawful intercept, charging, and some policy enforcement.

The SGSN 528 may track a location of the UE 502 and perform security functions and access control. In addition, the SGSN 528 may perform inter-EPC node signaling for mobility between different RAT networks; PDN and S-GW selection as specified by MME 524; MME selection for handovers; etc. The S3 reference point between the MME 524 and the SGSN 528 may enable user and bearer information exchange for inter-3GPP access network mobility in idle/active states.

The HSS 530 may include a database for network users, including subscription-related information to support the network entities' handling of communication sessions. The HSS 530 can provide support for routing/roaming, authentication, authorization, naming/addressing

resolution, location dependencies, etc. An S6a reference point between the HSS 530 and the MME 524 may enable transfer of subscription and authentication data for authenticating/authorizing user access to the LTE CN 520.

The PGW 532 may terminate an SGi interface toward a data network (DN) 536 that may include an application/content server 538. The PGW 532 may route data packets between the LTE CN 522 and the data network 536. The PGW 532 may be coupled with the SGW 526 by an S5 reference point to facilitate user plane tunneling and tunnel management. The PGW 532 may further include a node for policy enforcement and charging data collection (for example, PCEF). Additionally, the SGi reference point between the PGW 532 and the data network 5 36 may be an operator external public, a private PDN, or an intra-operator packet data network, for example, for provision of IMS services. The PGW 532 may be coupled with a PCRF 534 via a Gx reference point.

The PCRF 534 is the policy and charging control element of the LTE CN 522. The PCRF 534 may be communicatively coupled to the app/content server 538 to determine appropriate QoS and charging parameters for service flows. The PCRF 532 may provision associated rules into a PCEF (via Gx reference point) with appropriate TFT and QCI.

In some embodiments, the CN 520 may be a 5GC 540. The 5GC 540 may include an AUSF 542, AMF 544, SMF 546, UPF 548, NSSF 550, NEF 552, NRF 554, PCF 556, UDM 558, and AF 560 coupled with one another over interfaces (or "reference points") as shown. Functions of the elements of the 5GC 540 may be briefly introduced as follows.

The AUSF 542 may store data for authentication of UE 502 and handle authentication-related functionality. The AUSF 542 may facilitate a common authentication framework for various access types. In addition to communicating with other elements of the 5GC 540 over reference points as shown, the AUSF 542 may exhibit an Nausf service-based interface.

The AMF 544 may allow other functions of the 5GC 540 to communicate with the UE 502 and the RAN 504 and to subscribe to notifications about mobility events with respect to the UE 502. The AMF 544 may be responsible for registration management (for example, for registering UE 502), connection management, reachability management, mobility management, lawful interception of AMF-related events, and access authentication and authorization. The AMF 544 may provide transport for SM messages between the UE 502 and the SMF 546, and act as a transparent proxy for routing SM messages. AMF 544 may also provide transport for SMS messages between UE 502 and an SMSF. AMF 544 may interact with the AUSF 542 and the UE 502 to perform various security anchor and context management functions. Furthermore, AMF 544 may be a termination point of a RAN CP interface, which may include or be an N2 reference point between the RAN 504 and the AMF 544; and the AMF 544 may be a termination point of

NAS (N1) signaling, and perform NAS ciphering and integrity protection. AMF 544 may also support NAS signaling with the UE 502 over an N3 IWF interface.

The SMF 546 may be responsible for SM (for example, session establishment, tunnel management between UPF 548 and AN 508); UE IP address allocation and management (including optional authorization); selection and control of UP function; configuring traffic steering at UPF 548 to route traffic to proper destination; termination of interfaces toward policy control functions; controlling part of policy enforcement, charging, and QoS; lawful intercept (for SM events and interface to LI system); termination of SM parts of NAS messages; downlink data notification; initiating AN specific SM information, sent via AMF 544 over N2 to AN 508; and determining SSC mode of a session. SM may refer to management of a PDU session, and a PDU session or "session" may refer to a PDU connectivity service that provides or enables the exchange of PDUs between the UE 502 and the data network 536.

The UPF 548 may act as an anchor point for intra-RAT and inter-RAT mobility, an external PDU session point of interconnect to data network 536, and a branching point to support multi-homed PDU session. The UPF 548 may also perform packet routing and forwarding, perform packet inspection, enforce the user plane part of policy rules, lawfully intercept packets (UP collection), perform traffic usage reporting, perform QoS handling for a user plane (e.g., packet filtering, gating, UL/DL rate enforcement), perform uplink traffic verification (e.g., SDF-to-QoS flow mapping), transport level packet marking in the uplink and downlink, and perform downlink packet buffering and downlink data notification triggering. UPF 548 may include an uplink classifier to support routing traffic flows to a data network.

The NSSF 550 may select a set of network slice instances serving the UE 502. The NSSF 550 may also determine allowed NSSAI and the mapping to the subscribed S-NSSAIs, if needed. The NSSF 550 may also determine the AMF set to be used to serve the UE 502, or a list of candidate AMFs based on a suitable configuration and possibly by querying the NRF 554. The selection of a set of network slice instances for the UE 502 may be triggered by the AMF 544 with which the UE 502 is registered by interacting with the NSSF 550, which may lead to a change of AMF. The NSSF 550 may interact with the AMF 544 via an N22 reference point; and may communicate with another NSSF in a visited network via an N31 reference point (not shown). Additionally, the NSSF 550 may exhibit an Nnssf service-based interface.

The NEF 552 may securely expose services and capabilities provided by 3GPP network functions for third party, internal exposure/re-exposure, AFs (e.g., AF 560), edge computing or fog computing systems, etc. In such embodiments, the NEF 552 may authenticate, authorize, or throttle the AFs. NEF 552 may also translate information exchanged with the AF 560 and information exchanged with internal network functions. For example, the NEF 552 may translate

between an AF-Service-Identifier and an internal 5GC information. NEF 552 may also receive information from other NFs based on exposed capabilities of other NFs. This information may be stored at the NEF 552 as structured data, or at a data storage NF using standardized interfaces. The stored information can then be re-exposed by the NEF 552 to other NFs and AFs, or used for other purposes such as analytics. Additionally, the NEF 552 may exhibit an Nnef service-based interface.

The NRF 554 may support service discovery functions, receive NF discovery requests from NF instances, and provide the information of the discovered NF instances to the NF instances. NRF 554 also maintains information of available NF instances and their supported services. As used herein, the terms "instantiate," "instantiation," and the like may refer to the creation of an instance, and an "instance" may refer to a concrete occurrence of an object, which may occur, for example, during execution of program code. Additionally, the NRF 554 may exhibit the Nnrf service-based interface.

The PCF 556 may provide policy rules to control plane functions to enforce them, and may also support unified policy framework to govern network behavior. The PCF 556 may also implement a front end to access subscription information relevant for policy decisions in a UDR of the UDM 558. In addition to communicating with functions over reference points as shown, the PCF 556 exhibit an Npcf service-based interface.

The UDM 558 may handle subscription-related information to support the network entities' handling of communication sessions, and may store subscription data of UE 502. For example, subscription data may be communicated via an N8 reference point between the UDM 558 and the AMF 544. The UDM 558 may include two parts, an application front end and a UDR. The UDR may store subscription data and policy data for the UDM 558 and the PCF 556, and/or structured data for exposure and application data (including PFDs for application detection, application request information for multiple UEs 502) for the NEF 552. The Nudr service-based interface may be exhibited by the UDR 221 to allow the UDM 558, PCF 556, and NEF 552 to access a particular set of the stored data, as well as to read, update (e.g., add, modify), delete, and subscribe to notification of relevant data changes in the UDR. The UDM may include a UDM-FE, which is in charge of processing credentials, location management, subscription management and so on. Several different front ends may serve the same user in different transactions. The UDM-FE accesses subscription information stored in the UDR and performs authentication credential processing, user identification handling, access authorization, registration/mobility management, and subscription management. In addition to communicating with other NFs over reference points as shown, the UDM 558 may exhibit the Nudm service-based interface.

The AF 560 may provide application influence on traffic routing, provide access to NEF,

and interact with the policy framework for policy control.

In some embodiments, the 5GC 540 may enable edge computing by selecting operator/3rd party services to be geographically close to a point that the UE 502 is attached to the network. This may reduce latency and load on the network. To provide edge-computing implementations, the 5GC 540 may select a UPF 548 close to the UE 502 and execute traffic steering from the UPF 548 to data network 536 via the N6 interface. This may be based on the UE subscription data, UE location, and information provided by the AF 560. In this way, the AF 560 may influence UPF (re)selection and traffic routing. Based on operator deployment, when AF 560 is considered to be a trusted entity, the network operator may permit AF 560 to interact directly with relevant NFs. Additionally, the AF 560 may exhibit an Naf service-based interface.

The data network 536 may represent various network operator services, Internet access, or third party services that may be provided by one or more servers including, for example, application/content server 538.

Figure 6 schematically illustrates a wireless network 600 in accordance with various embodiments. The wireless network 600 may include a UE 602 in wireless communication with an AN 604. The UE 602 and AN 604 may be similar to, and substantially interchangeable with, like-named components described elsewhere herein.

The UE 602 may be communicatively coupled with the AN 604 via connection 606. The connection 606 is illustrated as an air interface to enable communicative coupling, and can be consistent with cellular communications protocols such as an LTE protocol or a 5G NR protocol operating at mmWave or sub-6GHz frequencies.

The UE 602 may include a host platform 608 coupled with a modem platform 610. The host platform 608 may include application processing circuitry 612, which may be coupled with protocol processing circuitry 614 of the modem platform 610. The application processing circuitry 612 may run various applications for the UE 602 that source/sink application data. The application processing circuitry 612 may further implement one or more layer operations to transmit/receive application data to/from a data network. These layer operations may include transport (for example UDP) and Internet (for example, IP) operations

The protocol processing circuitry 614 may implement one or more of layer operations to facilitate transmission or reception of data over the connection 606. The layer operations implemented by the protocol processing circuitry 614 may include, for example, MAC, RLC, PDCP, RRC and NAS operations.

The modem platform 610 may further include digital baseband circuitry 616 that may implement one or more layer operations that are "below" layer operations performed by the protocol processing circuitry 614 in a network protocol stack. These operations may include, for

example, PHY operations including one or more of HARQ-ACK functions, scrambling/descrambling, encoding/decoding, layer mapping/de-mapping, modulation symbol mapping, received symbol/bit metric determination, multi-antenna port precoding/decoding, which may include one or more of space-time, space-frequency or spatial coding, reference signal generation/detection, preamble sequence generation and/or decoding, synchronization sequence generation/detection, control channel signal blind decoding, and other related functions.

The modem platform 610 may further include transmit circuitry 618, receive circuitry 620, RF circuitry 622, and RF front end (RFFE) 624, which may include or connect to one or more antenna panels 626. Briefly, the transmit circuitry 618 may include a digital-to-analog converter, mixer, intermediate frequency (IF) components, etc.; the receive circuitry 620 may include an analog-to-digital converter, mixer, IF components, etc.; the RF circuitry 622 may include a low-noise amplifier, a power amplifier, power tracking components, etc.; RFFE 624 may include filters (for example, surface/bulk acoustic wave filters), switches, antenna tuners, beamforming components (for example, phase-array antenna components), etc. The selection and arrangement of the components of the transmit circuitry 618, receive circuitry 620, RF circuitry 622, RFFE 624, and antenna panels 626 (referred generically as "transmit/receive components") may be specific to details of a specific implementation such as, for example, whether communication is TDM or FDM, in mmWave or sub-6 gHz frequencies, etc. In some embodiments, the transmit/receive components may be arranged in multiple parallel transmit/receive chains, may be disposed in the same or different chips/modules, etc.

In some embodiments, the protocol processing circuitry 614 may include one or more instances of control circuitry (not shown) to provide control functions for the transmit/receive components.

A UE reception may be established by and via the antenna panels 626, RFFE 624, RF circuitry 622, receive circuitry 620, digital baseband circuitry 616, and protocol processing circuitry 614. In some embodiments, the antenna panels 626 may receive a transmission from the AN 604 by receive-beamforming signals received by a plurality of antennas/antenna elements of the one or more antenna panels 626.

A UE transmission may be established by and via the protocol processing circuitry 614, digital baseband circuitry 616, transmit circuitry 618, RF circuitry 622, RFFE 624, and antenna panels 626. In some embodiments, the transmit components of the UE 604 may apply a spatial filter to the data to be transmitted to form a transmit beam emitted by the antenna elements of the antenna panels 626.

Similar to the UE 602, the AN 604 may include a host platform 628 coupled with a modem platform 630. The host platform 628 may include application processing circuitry 632 coupled with protocol processing circuitry 634 of the modem platform 630. The modem platform may further include digital baseband circuitry 636, transmit circuitry 638, receive circuitry 640, RF circuitry 642, RFFE circuitry 644, and antenna panels 646. The components of the AN 604 may be similar to and substantially interchangeable with like-named components of the UE 602. In addition to performing data transmission/reception as described above, the components of the AN 608 may perform various logical functions that include, for example, RNC functions such as radio bearer management, uplink and downlink dynamic radio resource management, and data packet scheduling.

Figure 7 is a block diagram illustrating components, according to some example embodiments, able to read instructions from a machine-readable or computer-readable medium (e.g., a non-transitory machine-readable storage medium) and perform any one or more of the methodologies discussed herein. Specifically, Figure 7 shows a diagrammatic representation of hardware resources 700 including one or more processors (or processor cores) 710, one or more memory/storage devices 720, and one or more communication resources 730, each of which may be communicatively coupled via a bus 740 or other interface circuitry. For embodiments where node virtualization (e.g., NFV) is utilized, a hypervisor 702 may be executed to provide an execution environment for one or more network slices/sub-slices to utilize the hardware resources 700.

The processors 710 may include, for example, a processor 712 and a processor 714. The processors 710 may be, for example, a central processing unit (CPU), a reduced instruction set computing (RISC) processor, a complex instruction set computing (CISC) processor, a graphics processing unit (GPU), a DSP such as a baseband processor, an ASIC, an FPGA, a radio-frequency integrated circuit (RFIC), another processor (including those discussed herein), or any suitable combination thereof.

The memory/storage devices 720 may include main memory, disk storage, or any suitable combination thereof. The memory/storage devices 720 may include, but are not limited to, any type of volatile, non-volatile, or semi-volatile memory such as dynamic random access memory (DRAM), static random access memory (SRAM), erasable programmable read-only memory (EPROM), electrically erasable programmable read-only memory (EEPROM), Flash memory, solid-state storage, etc.

The communication resources 730 may include interconnection or network interface controllers, components, or other suitable devices to communicate with one or more peripheral devices 704 or one or more databases 706 or other network elements via a network 708. For

example, the communication resources 730 may include wired communication components (e.g., for coupling via USB, Ethernet, etc.), cellular communication components, NFC components, Bluetooth® (or Bluetooth® Low Energy) components, Wi-Fi® components, and other communication components.

Instructions 750 may comprise software, a program, an application, an applet, an app, or other executable code for causing at least any of the processors 710 to perform any one or more of the methodologies discussed herein. The instructions 750 may reside, completely or partially, within at least one of the processors 710 (e.g., within the processor's cache memory), the memory/storage devices 720, or any suitable combination thereof. Furthermore, any portion of the instructions 750 may be transferred to the hardware resources 700 from any combination of the peripheral devices 704 or the databases 706. Accordingly, the memory of processors 710, the memory/storage devices 720, the peripheral devices 704, and the databases 706 are examples of computer-readable and machine-readable media.

**EXAMPLE PROCEDURES**

In some embodiments, the electronic device(s), network(s), system(s), chip(s) or component(s), or portions or implementations thereof, of Figures 5-7, or some other figure herein, may be configured to perform one or more processes, techniques, or methods as described herein, or portions thereof. One such process 800 is depicted in Figure 8. The process 800 may be performed by a user equipment (UE) or a portion thereof. For example, the process 800 may include, at 802, receiving configuration information for transmission of a physical uplink shared channel (PUSCH) with repetitions to multiple transmission-reception point (TRPs). At 804, the process 800 may further include encoding the PUSCH with repetitions for transmission to the multiple TRPs based on the configuration information.

In some embodiments, the PUSCH may be a configured grant (CG) PUSCH. For example, the PUSCH may be a Type-1 CG PUSCH, and the configuration information may include a ConfiguredGrantConfig information element (IE) with at least two srs-ResourceIndicator parameters and/or at least two PrecodingAndNumberOfLayers parameters (e.g., for respective TRPs). In another example, the PUSCH may be a Type-2 CG and the configuration information may be included in a DCI. In some embodiments, the DCI may include respective SRIs, precoding information, and/or number of layers for the repetitions to the different TRPs. The configuration information may additionally or alternatively include an indication of a beam switching gap, a default SRS resource set ID for power control, and/or an indication of one or more PTRS port – DMRS port associations for the PUSCH with repetitions.

Figure 9 illustrates another process 900 in accordance with various embodiments. The process 900 may be performed by a gNB or a portion thereof. At 902, the process 900 may

include encoding, for transmission to a user equipment (UE), configuration information for transmission by the UE of a physical uplink shared channel (PUSCH) with repetitions to multiple transmission-reception points (TRPs). At 904, the process 900 may further include receiving the PUSCH with repetitions based on the configuration information.

In some embodiments, the PUSCH may be a configured grant (CG) PUSCH. For example, the PUSCH may be a Type-1 CG PUSCH, and the configuration information may include a ConfiguredGrantConfig information element (IE) with at least two srs-ResourceIndicator parameters and/or at least two PrecodingAndNumberOfLayers parameters (e.g., for respective TRPs). In another example, the PUSCH may be a Type-2 CG and the configuration information may be included in a DCI. In some embodiments, the DCI may include respective SRIs, precoding information, and/or number of layers for the repetitions to the different TRPs. The configuration information may additionally or alternatively include an indication of a beam switching gap, a default SRS resource set ID for power control, and/or an indication of one or more PTRS port – DMRS port associations for the PUSCH with repetitions.

For one or more embodiments, at least one of the components set forth in one or more of the preceding figures may be configured to perform one or more operations, techniques, processes, and/or methods as set forth in the example section below. For example, the baseband circuitry as described above in connection with one or more of the preceding figures may be configured to operate in accordance with one or more of the examples set forth below. For another example, circuitry associated with a UE, base station, network element, etc. as described above in connection with one or more of the preceding figures may be configured to operate in accordance with one or more of the examples set forth below in the example section.

**EXAMPLES**

Some non-limiting examples of various embodiments are described below.

Example A1 may include one or more non-transitory computer-readable media (NTCRM) having instructions, stored thereon, that when executed by one or more processors of a user equipment (UE) cause the UE to: receive configuration information for transmission of a physical uplink shared channel (PUSCH) with repetitions to multiple transmission-reception points (TRPs); and encode the PUSCH with repetitions for transmission to the multiple TRPs based on the configuration information.

Example A2 may include the one or more NTCRM of example A1 or some other example herein, wherein the PUSCH is a configured grant (CG) PUSCH.

Example A3 may include the one or more NTCRM of example A1 or some other example herein, wherein the PUSCH is a Type-1 CG PUSCH, and wherein the configuration

information includes a ConfiguredGrantConfig information element (IE) with at least two srs-ResourceIndicator parameters and/or at least two PrecodingAndNumberOfLayers parameters.

Example A4 may include the one or more NTCRM of example A1 or some other example herein, wherein the PUSCH is a Type-2 CG PUSCH, and wherein the configuration information is included in a downlink control information (DCI).

Example A5 may include the one or more NTCRM of example A4 or some other example herein, wherein the configuration information includes one or more of a sounding reference signal (SRS) resource indicator (SRI), precoding information, or a number of layers for the repetitions to different TRPs of the multiple TRPs.

Example A6 may include the one or more NTCRM of example A1 or some other example herein, wherein the configuration information includes an indication of a beam switching gap for the PUSCH with repetitions.

Example A7 may include the one or more NTCRM of example A6 or some other example herein, wherein the PUSCH with repetitions is a Type-B PUSCH repetition.

Example A8 may include the one or more NTCRM of any one of examples A1-A7 or some other example herein, wherein the configuration information includes an indication of a default sounding reference signal (SRS) resource set ID for power control of the PUSCH with repetitions.

Example A9 may include the one or more NTCRM of any one of examples A1-A7 or some other example herein, wherein the PUSCH has a transmission rank greater than 2, and wherein the configuration information includes a two-bit field to indicate one or more PTRS port – DMRS port associations for the PUSCH with repetitions.

Example A10 may include one or more non-transitory computer-readable media (NTCRM) having instructions, stored thereon, that when executed by one or more processors of a next generation Node B (gNB) cause the gNB to: encode, for transmission to a user equipment (UE), configuration information for transmission by the UE of a physical uplink shared channel (PUSCH) with repetitions to multiple transmission-reception points (TRPs); and receive the PUSCH with repetitions based on the configuration information.

Example A11 may include the one or more NTCRM of example A10 or some other example herein, wherein the PUSCH is a configured grant (CG) PUSCH.

Example A12 may include the one or more NTCRM of example A10 or some other example herein, wherein the PUSCH is a Type-1 CG PUSCH, and wherein the configuration information includes a ConfiguredGrantConfig information element (IE) with at least two srs-ResourceIndicator parameters and/or at least two PrecodingAndNumberOfLayers parameters.

Example A13 may include the one or more NTCRM of example A10 or some other example herein, wherein the PUSCH is a Type-2 CG PUSCH, and wherein the configuration information is included in a downlink control information (DCI).

Example A14 may include the one or more NTCRM of example A13 or some other example herein, wherein the configuration information includes one or more of a sounding reference signal (SRS) resource indicator (SRI), precoding information, or a number of layers for the repetitions to different TRPs of the multiple TRPs.

Example A15 may include the one or more NTCRM of example A10 or some other example herein, wherein the configuration information includes an indication of a beam switching gap for the PUSCH with repetitions.

Example A16 may include the one or more NTCRM of example A15 or some other example herein, wherein the PUSCH with repetitions is a Type-B PUSCH repetition.

Example A17 may include the one or more NTCRM of any one of examples A10-A16 or some other example herein, wherein the configuration information includes an indication of a default sounding reference signal (SRS) resource set ID for power control of the PUSCH with repetitions.

Example A18 may include the one or more NTCRM of any one of examples A10-A16 or some other example herein, wherein the PUSCH has a transmission rank greater than 2, and wherein the configuration information includes a two-bit field to indicate one or more PTRS port – DMRS port associations for the PUSCH with repetitions.

Example A19 may include an apparatus to be implemented in a user equipment (UE), the apparatus comprising: a memory to store information to associate a demodulation reference signal (DMRS) port with a phase tracking reference signal (PTRS) port for a physical uplink shared channel (PUSCH) transmission with repetitions to multiple transmission-reception points (TRPs); and processor circuitry coupled to the memory. The processor circuitry is to: receive a downlink control information (DCI) to schedule the PUSCH transmission with repetitions, wherein the PUSCH transmission has a transmission rank greater than 2, and wherein the DCI includes a two-bit field to indicate a PTRS port – DMRS port association based on the information; and encode the PUSCH transmission based on the two-bit field.

Example A20 may include the apparatus of example A19 or some other example herein, wherein the repetitions to the same TRP use a same PTRS port – DMRS port association.

Example A21 may include the apparatus of example A19 or some other example herein, wherein each repetition uses a different respective PTRS port – DMRS port association, and wherein at least one of the PTRS port – DMRS port associates is fixed and not dynamically indicated by the two-bit field.

Example A22 may include the apparatus of any one of examples A19-A21 or some other example herein, wherein the processor circuitry is further to encode semi-persistent channel state information (SP-CSI) for transmission in two of the repetitions to respective different TRPs.

Example B1 may include a method of CG PUSCH repetition for multi-TRP based schemes, where in the method includes:

1) the RRC configuration of Type-1 CG PUSCH; and/or

2) Type-2 CG PUSCH single-TRP/multi-TRP dynamic switching.

Example B2 may include the method of configuring beam switching gap for PUSCH repetition Type-B.

Example B3 may include the method of SRS resource set ID indication for ULPC, wherein the SRS resource set ID is configured to be 0 or 1 for PUSCH repetition towards the first and the second TRP, respectively, and the default SRS resource set ID is 0.

Example B4 may include the method of OLPC parameter set indication, wherein 2 bits are used for the field of OLPC parameter set indication for multi-TRP based PUSCH repetitions.

Example B5 may include the method of A-CSI/SP-CSI report in multi-TRP scenarios when the UE is scheduled to transmit a PUSCH repetition Type B with no transport block and with A-CSI or SP-CSI report.

Example B6 may include a method of PTRS-DMRS association in multi-TRP scenarios, wherein option 1 is using the same PTRS-DMRS association for both PUSCH repetitions toward the two TRPs and option-2 is reducing the resolution of PTRS-DMRS indication with MSB and LSB associated to the 2 TRPs.

Example B7 may include a method of a user equipment (UE), the method comprising: receiving configuration information for transmission of a physical uplink shared channel (PUSCH) with repetitions to multiple transmission-reception point (TRPs); and encoding the PUSCH with repetitions for transmission to the multiple TRPs based on the configuration information.

Example B8 may include the method of example B7 or some other example herein, wherein the PUSCH is a configured grant (CG) PUSCH.

Example B9 may include the method of example B7-B8 or some other example herein, wherein the PUSCH is a Type-1 CG PUSCH, and wherein the configuration information includes a ConfiguredGrantConfig information element (IE) with at least two srs-ResourceIndicator parameters and/or at least two PrecodingAndNumberOfLayers parameters.

Example B10 may include the method of example B7-B8 or some other example herein, wherein the PUSCH is a Type-2 CG PUSCH, and wherein the configuration information is included in a downlink control information (DCI).

Example B11 may include the method of example B10 or some other example herein, wherein the configuration information includes one or more of SRI, precoding information, and/or a number of layers for the repetitions to different TRPs of the multiple TRPs.

Example B12 may include the method of example B7-B11 or some other example herein, wherein the configuration information includes an indication of a beam switching gap for the PUSCH with repetitions.

Example B13 may include the method of example B12 or some other example herein, wherein the PUSCH with repetitions is Type-B PUSCH repetition.

Example B14 may include the method of example B7-B13 or some other example herein, wherein the configuration information includes an indication of a default sounding reference signal (SRS) resource set ID for power control of the PUSCH with repetitions.

Example Z01 may include an apparatus comprising means to perform one or more elements of a method described in or related to any of examples A1-A22, B1-B14, or any other method or process described herein.

Example Z02 may include one or more non-transitory computer-readable media comprising instructions to cause an electronic device, upon execution of the instructions by one or more processors of the electronic device, to perform one or more elements of a method described in or related to any of examples A1-A22, B1-B14, or any other method or process described herein.

Example Z03 may include an apparatus comprising logic, modules, or circuitry to perform one or more elements of a method described in or related to any of examples A1-A22, B1-B14, or any other method or process described herein.

Example Z04 may include a method, technique, or process as described in or related to any of examples A1-A22, B1-B14, or portions or parts thereof.

Example Z05 may include an apparatus comprising: one or more processors and one or more computer-readable media comprising instructions that, when executed by the one or more processors, cause the one or more processors to perform the method, techniques, or process as described in or related to any of examples A1-A22, B1-B14, or portions thereof.

Example Z06 may include a signal as described in or related to any of examples A1-A22, B1-B14, or portions or parts thereof.

Example Z07 may include a datagram, packet, frame, segment, protocol data unit (PDU), or message as described in or related to any of examples A1-A22, B1-B14, or portions or parts thereof, or otherwise described in the present disclosure.

Example Z08 may include a signal encoded with data as described in or related to any of examples A1-A22, B1-B14, or portions or parts thereof, or otherwise described in the present disclosure.

Example Z09 may include a signal encoded with a datagram, packet, frame, segment, protocol data unit (PDU), or message as described in or related to any of examples A1-A22, B1-B14, or portions or parts thereof, or otherwise described in the present disclosure.

Example Z10 may include an electromagnetic signal carrying computer-readable instructions, wherein execution of the computer-readable instructions by one or more processors is to cause the one or more processors to perform the method, techniques, or process as described in or related to any of examples A1-A22, B1-B14, or portions thereof.

Example Z11 may include a computer program comprising instructions, wherein execution of the program by a processing element is to cause the processing element to carry out the method, techniques, or process as described in or related to any of examples A1-A22, B1-B14, or portions thereof.

Example Z12 may include a signal in a wireless network as shown and described herein.

Example Z13 may include a method of communicating in a wireless network as shown and described herein.

Example Z14 may include a system for providing wireless communication as shown and described herein.

Example Z15 may include a device for providing wireless communication as shown and described herein.

Any of the above-described examples may be combined with any other example (or combination of examples), unless explicitly stated otherwise. The foregoing description of one or more implementations provides illustration and description, but is not intended to be exhaustive or to limit the scope of embodiments to the precise form disclosed. Modifications and variations are possible in light of the above teachings or may be acquired from practice of various embodiments.

**Abbreviations**

Unless used differently herein, terms, definitions, and abbreviations may be consistent with terms, definitions, and abbreviations defined in 3GPP TR 21.905 v16.0.0 (2019-06). For the purposes of the present document, the following abbreviations may apply to the examples and embodiments discussed herein.

3GPP Third Generation Partnership Project
4G Fourth Generation
5G Fifth Generation
5GC 5G Core network
AC Application Client
ACK Acknowledgement
ACID Application Client Identification
AF Application Function
AM Acknowledged Mode
AMBR Aggregate Maximum Bit Rate
AMF Access and Mobility Management Function
AN Access Network
ANR Automatic Neighbour Relation
AOA Angle of Arrival
AP Application Protocol, Antenna Port, Access Point
API Application Programming Interface
APN Access Point Name
ARP Allocation and Retention Priority
ARQ Automatic Repeat Request
AS Access Stratum
ASP Application Service Provider
ASN.1 Abstract Syntax Notation One
AUSF Authentication Server Function
AWGN Additive White Gaussian Noise
BAP Backhaul Adaptation Protocol
BCH Broadcast Channel
BER Bit Error Ratio
BFD Beam Failure Detection
BLER Block Error Rate
BPSK Binary Phase Shift Keying
BRAS Broadband Remote Access Server
BSS Business Support System
BS Base Station
BSR Buffer Status Report
BW Bandwidth
BWP Bandwidth Part
C-RNTI Cell Radio Network Temporary Identity
CA Carrier Aggregation, Certification Authority
CAPEX CAPital EXpenditure
CBRA Contention Based Random Access
CC Component Carrier, Country Code, Cryptographic Checksum
CCA Clear Channel Assessment
CCE Control Channel Element
CCCH Common Control Channel
CE Coverage Enhancement

CDM Content Delivery Network
CDMA Code-Division Multiple Access
CFRA Contention Free Random Access
CG Cell Group
CGF Charging Gateway Function
CHF Charging Function
CI Cell Identity
CID Cell-ID (e.g., positioning method)
CIM Common Information Model
CIR Carrier to Interference Ratio
CK Cipher Key
CM Connection Management, Conditional Mandatory
CMAS Commercial Mobile Alert Service
CMD Command
CMS Cloud Management System
CO Conditional Optional
CoMP Coordinated Multi-Point
CORESET Control Resource Set
COTS Commercial Off-The-Shelf
CP Control Plane, Cyclic Prefix, Connection Point
CPD Connection Point Descriptor
CPE Customer Premise Equipment
CPICH Common Pilot Channel
CQI Channel Quality Indicator
CPU CSI processing unit, Central Processing Unit
C/R Command/Response field bit
CRAN Cloud Radio Access Network, Cloud RAN
CRB Common Resource Block
CRC Cyclic Redundancy Check
CRI Channel-State Information Resource Indicator, CSI-RS Resource Indicator
C-RNTI Cell RNTI
CS Circuit Switched
CSCF call session control function
CSAR Cloud Service Archive
CSI Channel-State Information
CSI-IM CSI Interference Measurement
CSI-RS CSI Reference Signal
CSI-RSRP CSI reference signal received power
CSI-RSRQ CSI reference signal received quality
CSI-SINR CSI signal-to-noise and interference ratio
CSMA Carrier Sense Multiple Access
CSMA/CA CSMA with collision avoidance
CSS Common Search Space, Cell-specific Search Space

CTF Charging Trigger Function
CTS Clear-to-Send
CW Codeword
CWS Contention Window Size
D2D Device-to-Device
DC Dual Connectivity, Direct Current
DCI Downlink Control Information
DF Deployment Flavour
DL Downlink
DMTF Distributed Management Task Force
DPDK Data Plane Development Kit
DM-RS, DMRS Demodulation Reference Signal
DN Data network
DNN Data Network Name
DNAI Data Network Access Identifier
DRB Data Radio Bearer
DRS Discovery Reference Signal
DRX Discontinuous Reception
DSL Domain Specific Language. Digital Subscriber Line
DSLAM DSL Access Multiplexer
DwPTS Downlink Pilot Time Slot
E-LAN Ethernet Local Area Network
E2E End-to-End
ECCA extended clear channel assessment, extended CCA
ECCE Enhanced Control Channel Element, Enhanced CCE
ED Energy Detection
EDGE Enhanced Datarates for GSM Evolution (GSM Evolution)
EAS Edge Application Server
EASID Edge Application Server Identification
ECS Edge Configuration Server
ECSP Edge Computing Service Provider
EDN Edge Data Network
EEC Edge Enabler Client
EECID Edge Enabler Client Identification
EES Edge Enabler Server
EESID Edge Enabler Server Identification
EHE Edge Hosting Environment
EGMF Exposure Governance Management Function
EGPRS Enhanced GPRS
EIR Equipment Identity Register
eLAA enhanced Licensed Assisted Access, enhanced LAA
EM Element Manager
eMBB Enhanced Mobile Broadband

EMS Element Management System
eNB evolved NodeB, E-UTRAN Node B
EN-DC E-UTRA-NR Dual Connectivity
EPC Evolved Packet Core
EPDCCH enhanced PDCCH, enhanced Physical Downlink Control Cannel
EPRE Energy per resource element
EPS Evolved Packet System
EREG enhanced REG, enhanced resource element groups
ETSI European Telecommunications Standards Institute
ETWS Earthquake and Tsunami Warning System
eUICC embedded UICC, embedded Universal Integrated Circuit Card
E-UTRA Evolved UTRA
E-UTRAN Evolved UTRAN
EV2X Enhanced V2X
F1AP F1 Application Protocol
F1-C F1 Control plane interface
F1-U F1 User plane interface
FACCH Fast Associated Control CHannel
FACCH/F Fast Associated Control Channel/Full rate
FACCH/H Fast Associated Control Channel/Half rate
FACH Forward Access Channel
FAUSCH Fast Uplink Signalling Channel
FB Functional Block
FBI Feedback Information
FCC Federal Communications Commission
FCCH Frequency Correction CHannel
FDD Frequency Division Duplex
FDM Frequency Division Multiplex
FDMA Frequency Division Multiple Access
FE Front End
FEC Forward Error Correction
FFS For Further Study
FFT Fast Fourier Transformation
feLAA further enhanced Licensed Assisted Access, further enhanced LAA
FN Frame Number
FPGA Field-Programmable Gate Array
FR Frequency Range
FQDN Fully Qualified Domain Name
G-RNTI GERAN Radio Network Temporary Identity

GERAN GSM EDGE RAN, GSM EDGE Radio Access Network

GGSN Gateway GPRS Support Node

GLONASS GLObal'naya NAvigatsionnaya Sistema (Engl.: Global Navigation Satellite System)

gNB Next Generation NodeB

gNB-CU gNB-centralized unit, Next Generation NodeB centralized unit

gNB-DU gNB-distributed unit, Next Generation NodeB distributed unit

GNSS Global Navigation Satellite System

GPRS General Packet Radio Service

GPSI Generic Public Subscription Identifier

GSM Global System for Mobile Communications, Groupe Spécial Mobile

GTP GPRS Tunneling Protocol

GTP-U GPRS Tunnelling Protocol for User Plane

GTS Go To Sleep Signal (related to WUS)

GUMMEI Globally Unique MME Identifier

GUTI Globally Unique Temporary UE Identity

HARQ Hybrid ARQ, Hybrid Automatic Repeat Request

HANDO Handover

HFN HyperFrame Number

HHO Hard Handover

HLR Home Location Register

HN Home Network

HO Handover

HPLMN Home Public Land Mobile Network

HSDPA High Speed Downlink Packet Access

HSN Hopping Sequence Number

HSPA High Speed Packet Access

HSS Home Subscriber Server

HSUPA High Speed Uplink Packet Access

HTTP Hyper Text Transfer Protocol

HTTPS Hyper Text Transfer Protocol Secure (https is http/1.1 over SSL, i.e. port 443)

I-Block Information Block

ICCID Integrated Circuit Card Identification

IAB Integrated Access and Backhaul

ICIC Inter-Cell Interference Coordination

ID Identity, identifier

IDFT Inverse Discrete Fourier Transform
IE Information element
IBE In-Band Emission
IEEE Institute of Electrical and Electronics Engineers
IEI Information Element Identifier
IEIDL Information Element Identifier Data Length
IETF Internet Engineering Task Force
IF Infrastructure
IIOT Industrial Internet of Things
IM Interference Measurement, Intermodulation, IP Multimedia
IMC IMS Credentials
IMEI International Mobile Equipment Identity
IMGI International mobile group identity
IMPI IP Multimedia Private Identity
IMPU IP Multimedia PUblic identity
IMS IP Multimedia Subsystem
IMSI International Mobile Subscriber Identity
IoT Internet of Things
IP Internet Protocol
Ipsec IP Security, Internet Protocol Security
IP-CAN IP-Connectivity Access Network
IP-M IP Multicast
IPv4 Internet Protocol Version 4
IPv6 Internet Protocol Version 6
IR Infrared
IS In Sync
IRP Integration Reference Point
ISDN Integrated Services Digital Network
ISIM IM Services Identity Module
ISO International Organisation for Standardisation
ISP Internet Service Provider
IWF Interworking-Function
I-WLAN Interworking WLAN
K Constraint length of the convolutional code, USIM Individual key
kB Kilobyte (1000 bytes)
kbps kilo-bits per second
Kc Ciphering key
Ki Individual subscriber authentication key
KPI Key Performance Indicator
KQI Key Quality Indicator
KSI Key Set Identifier
ksps kilo-symbols per second

KVM Kernel Virtual Machine
L1 Layer 1 (physical layer)
L1-RSRP Layer 1 reference signal received power
L2 Layer 2 (data link layer)
L3 Layer 3 (network layer)
LAA Licensed Assisted Access
LAN Local Area Network
LADN Local Area Data Network
LBT Listen Before Talk
LCM LifeCycle Management
LCR Low Chip Rate
LCS Location Services
LCID Logical Channel ID
LI Layer Indicator
LLC Logical Link Control, Low Layer Compatibility
LMF Location Management Function
LOS Line of Sight
LPLMN Local PLMN
LPP LTE Positioning Protocol
LSB Least Significant Bit
LTE Long Term Evolution
LWA LTE-WLAN aggregation
LWIP LTE/WLAN Radio Level Integration with IPsec Tunnel
LTE Long Term Evolution
M2M Machine-to-Machine
MAC Medium Access Control (protocol layering context)
MAC Message authentication code (security/encryption context)
MAC-A MAC used for authentication and key agreement (TSG T WG3 context)
MAC-IMAC used for data integrity of signalling messages (TSG T WG3 context)
MANO Management and Orchestration
MBMS Multimedia Broadcast and Multicast Service
MBSFN Multimedia Broadcast multicast service Single Frequency Network
MCC Mobile Country Code
MCG Master Cell Group
MCOT Maximum Channel Occupancy Time
MCS Modulation and coding scheme
MDAF Management Data Analytics Function
MDAS Management Data Analytics Service
MDT Minimization of Drive Tests

ME Mobile Equipment
MeNB master eNB
MER Message Error Ratio
MGL Measurement Gap Length
MGRP Measurement Gap Repetition Period
MIB Master Information Block, Management Information Base
MIMO Multiple Input Multiple Output
MLC Mobile Location Centre
MM Mobility Management
MME Mobility Management Entity
MN Master Node
MNO Mobile Network Operator
MO Measurement Object, Mobile Originated
MPBCH MTC Physical Broadcast CHannel
MPDCCH MTC Physical Downlink Control CHannel
MPDSCH MTC Physical Downlink Shared CHannel
MPRACH MTC Physical Random Access CHannel
MPUSCH MTC Physical Uplink Shared Channel
MPLS MultiProtocol Label Switching
MS Mobile Station
MSB Most Significant Bit
MSC Mobile Switching Centre
MSI Minimum System Information, MCH Scheduling Information
MSID Mobile Station Identifier
MSIN Mobile Station Identification Number
MSISDN Mobile Subscriber ISDN Number
MT Mobile Terminated, Mobile Termination
MTC Machine-Type Communications
mMTC massive MTC, massive Machine-Type Communications
MU-MIMO Multi User MIMO
MWUS MTC wake-up signal, MTC WUS
NACK Negative Acknowledgement
NAI Network Access Identifier
NAS Non-Access Stratum, Non- Access Stratum layer
NCT Network Connectivity Topology
NC-JT Non-Coherent Joint Transmission
NEC Network Capability Exposure
NE-DC NR-E-UTRA Dual Connectivity
NEF Network Exposure Function

NF Network Function
NFP Network Forwarding Path
NFPD Network Forwarding Path Descriptor
NFV Network Functions Virtualization
NFVI NFV Infrastructure
NFVO NFV Orchestrator
NG Next Generation, Next Gen
NGEN-DC NG-RAN E-UTRA-NR Dual Connectivity
NM Network Manager
NMS Network Management System
N-PoP Network Point of Presence
NMIB, N-MIB Narrowband MIB
NPBCH Narrowband Physical Broadcast CHannel
NPDCCH Narrowband Physical Downlink Control CHannel
NPDSCH Narrowband Physical Downlink Shared CHannel
NPRACH Narrowband Physical Random Access CHannel
NPUSCH Narrowband Physical Uplink Shared CHannel
NPSS Narrowband Primary Synchronization Signal
NSSS Narrowband Secondary Synchronization Signal
NR New Radio,
Neighbour Relation
NRF NF Repository Function
NRS Narrowband Reference Signal
NS Network Service
NSA Non-Standalone operation mode
NSD Network Service Descriptor
NSR Network Service Record
NSSAI Network Slice Selection Assistance Information
S-NNSAI Single-NSSAI
NSSF Network Slice Selection Function
NW Network
NWUS Narrowband wake-up signal, Narrowband WUS
NZP Non-Zero Power
O&M Operation and Maintenance
ODU2 Optical channel Data Unit - type 2
OFDM Orthogonal Frequency Division Multiplexing
OFDMA Orthogonal Frequency Division Multiple Access
OOB Out-of-band
OOS Out of Sync
OPEX OPerating EXpense
OSI Other System Information

OSS Operations Support System
OTA over-the-air
PAPR Peak-to-Average Power Ratio
PAR Peak to Average Ratio
PBCH Physical Broadcast Channel
PC Power Control, Personal Computer
PCC Primary Component Carrier, Primary CC
P-CSCF Proxy CSCF
PCell Primary Cell
PCI Physical Cell ID, Physical Cell Identity
PCEF Policy and Charging Enforcement Function
PCF Policy Control Function
PCRF Policy Control and Charging Rules Function
PDCP Packet Data Convergence Protocol, Packet Data Convergence Protocol layer
PDCCH Physical Downlink Control Channel
PDCP Packet Data Convergence Protocol
PDN Packet Data Network, Public Data Network
PDSCH Physical Downlink Shared Channel
PDU Protocol Data Unit
PEI Permanent Equipment Identifiers
PFD Packet Flow Description
P-GW PDN Gateway
PHICH Physical hybrid-ARQ indicator channel
PHY Physical layer
PLMN Public Land Mobile Network
PIN Personal Identification Number
PM Performance Measurement
PMI Precoding Matrix Indicator
PNF Physical Network Function
PNFD Physical Network Function Descriptor
PNFR Physical Network Function Record
POC PTT over Cellular
PP, PTP Point-to-Point
PPP Point-to-Point Protocol
PRACH Physical RACH
PRB Physical resource block
PRG Physical resource block group
ProSe Proximity Services, Proximity-Based Service
PRS Positioning Reference Signal
PRR Packet Reception Radio
PS Packet Services
PSBCH Physical Sidelink Broadcast Channel
PSDCH Physical Sidelink Downlink Channel

PSCCH Physical Sidelink Control Channel
PSSCH Physical Sidelink Shared Channel
PSCell Primary SCell
PSS Primary Synchronization Signal
PSTN Public Switched Telephone Network
PT-RS Phase-tracking reference signal
PTT Push-to-Talk
PUCCH Physical Uplink Control Channel
PUSCH Physical Uplink Shared Channel
QAM Quadrature Amplitude Modulation
QCI QoS class of identifier
QCL Quasi co-location
QFI QoS Flow ID, QoS Flow Identifier
QoS Quality of Service
QPSK Quadrature (Quaternary) Phase Shift Keying
QZSS Quasi-Zenith Satellite System
RA-RNTI Random Access RNTI
RAB Radio Access Bearer, Random Access Burst
RACH Random Access Channel
RADIUS Remote Authentication Dial In User Service
RAN Radio Access Network
RAND RANDom number (used for authentication)
RAR Random Access Response
RAT Radio Access Technology
RAU Routing Area Update
RB Resource block, Radio Bearer
RBG Resource block group
REG Resource Element Group
Rel Release
REQ REQuest
RF Radio Frequency
RI Rank Indicator
RIV Resource indicator value
RL Radio Link
RLC Radio Link Control, Radio Link Control layer
RLC AM RLC Acknowledged Mode
RLC UM RLC Unacknowledged Mode
RLF Radio Link Failure
RLM Radio Link Monitoring
RLM-RS Reference Signal for RLM
RM Registration Management
RMC Reference Measurement Channel
RMSI Remaining MSI, Remaining Minimum System Information
RN Relay Node
RNC Radio Network Controller

RNL Radio Network Layer
RNTI Radio Network Temporary Identifier
ROHC RObust Header Compression
RRC Radio Resource Control, Radio Resource Control layer
RRM Radio Resource Management
RS Reference Signal
RSRP Reference Signal Received Power
RSRQ Reference Signal Received Quality
RSSI Received Signal Strength Indicator
RSU Road Side Unit
RSTD Reference Signal Time difference
RTP Real Time Protocol
RTS Ready-To-Send
RTT Round Trip Time
Rx Reception, Receiving, Receiver
S1AP S1 Application Protocol
S1-MME S1 for the control plane
S1-U S1 for the user plane
S-CSCF serving CSCF
S-GW Serving Gateway
S-RNTI SRNC Radio Network Temporary Identity
S-TMSI SAE Temporary Mobile Station Identifier
SA Standalone operation mode
SAE System Architecture Evolution
SAP Service Access Point
SAPD Service Access Point Descriptor
SAPI Service Access Point Identifier
SCC Secondary Component Carrier, Secondary CC
SCell Secondary Cell
SCEF Service Capability Exposure Function
SC-FDMA Single Carrier Frequency Division Multiple Access
SCG Secondary Cell Group
SCM Security Context Management
SCS Subcarrier Spacing
SCTP Stream Control Transmission Protocol
SDAP Service Data Adaptation Protocol, Service Data Adaptation Protocol layer
SDL Supplementary Downlink
SDNF Structured Data Storage Network Function
SDP Session Description Protocol
SDSF Structured Data Storage Function
SDT Small Data Transmission

SDU Service Data Unit
SEAF Security Anchor Function
SeNB secondary eNB
SEPP Security Edge Protection Proxy
SFI Slot format indication
SFTD Space-Frequency Time Diversity, SFN and frame timing difference
SFN System Frame Number
SgNB Secondary gNB
SGSN Serving GPRS Support Node
S-GW Serving Gateway
SI System Information
SI-RNTI System Information RNTI
SIB System Information Block
SIM Subscriber Identity Module
SIP Session Initiated Protocol
SiP System in Package
SL Sidelink
SLA Service Level Agreement
SM Session Management
SMF Session Management Function
SMS Short Message Service
SMSF SMS Function
SMTC SSB-based Measurement Timing Configuration
SN Secondary Node, Sequence Number
SoC System on Chip
SON Self-Organizing Network
SpCell Special Cell
SP-CSI-RNTISemi-Persistent CSI RNTI
SPS Semi-Persistent Scheduling
SQN Sequence number
SR Scheduling Request
SRB Signalling Radio Bearer
SRS Sounding Reference Signal
SS Synchronization Signal
SSB Synchronization Signal Block
SSID Service Set Identifier
SS/PBCH Block
SSBRI SS/PBCH Block Resource Indicator, Synchronization Signal Block Resource Indicator
SSC Session and Service Continuity
SS-RSRP Synchronization Signal based Reference Signal Received Power
SS-RSRQ Synchronization Signal based Reference Signal Received Quality
SS-SINR Synchronization Signal based Signal to Noise and Interference Ratio
SSS Secondary Synchronization Signal
SSSG Search Space Set Group

SSSIF Search Space Set Indicator
SST Slice/Service Types
SU-MIMO Single User MIMO
SUL Supplementary Uplink
TA Timing Advance, Tracking Area
TAC Tracking Area Code
TAG Timing Advance Group
TAI Tracking Area Identity
TAU Tracking Area Update
TB Transport Block
TBS Transport Block Size
TBD To Be Defined
TCI Transmission Configuration Indicator
TCP Transmission Communication Protocol
TDD Time Division Duplex
TDM Time Division Multiplexing
TDMA Time Division Multiple Access
TE Terminal Equipment
TEID Tunnel End Point Identifier
TFT Traffic Flow Template
TMSI Temporary Mobile Subscriber Identity
TNL Transport Network Layer
TPC Transmit Power Control
TPMI Transmitted Precoding Matrix Indicator
TR Technical Report
TRP, TRxP Transmission Reception Point
TRS Tracking Reference Signal
TRx Transceiver
TS Technical Specifications, Technical Standard
TTI Transmission Time Interval
Tx Transmission, Transmitting, Transmitter
U-RNTI UTRAN Radio Network Temporary Identity
UART Universal Asynchronous Receiver and Transmitter
UCI Uplink Control Information
UE User Equipment
UDM Unified Data Management
UDP User Datagram Protocol
UDSF Unstructured Data Storage Network Function
UICC Universal Integrated Circuit Card
UL Uplink
UM Unacknowledged Mode
UML Unified Modelling Language
UMTS Universal Mobile Telecommunications System
UP User Plane

UPF User Plane Function
URI Uniform Resource Identifier
URL Uniform Resource Locator
URLLC Ultra-Reliable and Low Latency
USB Universal Serial Bus
USIM Universal Subscriber Identity Module
USS UE-specific search space
UTRA UMTS Terrestrial Radio Access
UTRAN Universal Terrestrial Radio Access Network
UwPTS Uplink Pilot Time Slot
V2I Vehicle-to-Infrastruction
V2P Vehicle-to-Pedestrian
V2V Vehicle-to-Vehicle
V2X Vehicle-to-everything
VIM Virtualized Infrastructure Manager
VL Virtual Link,
VLAN Virtual LAN, Virtual Local Area Network
VM Virtual Machine
VNF Virtualized Network Function
VNFFG VNF Forwarding Graph
VNFFGD VNF Forwarding Graph Descriptor
VNFM VNF Manager
VoIP Voice-over-IP, Voice-over-Internet Protocol
VPLMN Visited Public Land Mobile Network
VPN Virtual Private Network
VRB Virtual Resource Block
WiMAX Worldwide Interoperability for Microwave Access
WLANWireless Local Area Network
WMAN Wireless Metropolitan Area Network
WPANWireless Personal Area Network
X2-C X2-Control plane
X2-U X2-User plane
XML eXtensible Markup Language
XRES EXpected user RESponse
XOR eXclusive OR
ZC Zadoff-Chu
ZP Zero Power

**Terminology**

For the purposes of the present document, the following terms and definitions are applicable to the examples and embodiments discussed herein.

The term "circuitry" as used herein refers to, is part of, or includes hardware components such as an electronic circuit, a logic circuit, a processor (shared, dedicated, or group) and/or memory (shared, dedicated, or group), an Application Specific Integrated Circuit (ASIC), a field-programmable device (FPD) (e.g., a field-programmable gate array (FPGA), a programmable logic device (PLD), a complex PLD (CPLD), a high-capacity PLD (HCPLD), a structured ASIC, or a programmable SoC), digital signal processors (DSPs), etc., that are configured to provide the described functionality. In some embodiments, the circuitry may execute one or more software or firmware programs to provide at least some of the described functionality. The term "circuitry" may also refer to a combination of one or more hardware elements (or a combination of circuits used in an electrical or electronic system) with the program code used to carry out the functionality of that program code. In these embodiments, the combination of hardware elements and program code may be referred to as a particular type of circuitry.

The term "processor circuitry" as used herein refers to, is part of, or includes circuitry capable of sequentially and automatically carrying out a sequence of arithmetic or logical operations, or recording, storing, and/or transferring digital data. Processing circuitry may include one or more processing cores to execute instructions and one or more memory structures to store program and data information. The term "processor circuitry" may refer to one or more application processors, one or more baseband processors, a physical central processing unit (CPU), a single-core processor, a dual-core processor, a triple-core processor, a quad-core processor, and/or any other device capable of executing or otherwise operating computer-executable instructions, such as program code, software modules, and/or functional processes. Processing circuitry may include more hardware accelerators, which may be microprocessors, programmable processing devices, or the like. The one or more hardware accelerators may include, for example, computer vision (CV) and/or deep learning (DL) accelerators. The terms "application circuitry" and/or "baseband circuitry" may be considered synonymous to, and may be referred to as, "processor circuitry."

The term "interface circuitry" as used herein refers to, is part of, or includes circuitry that enables the exchange of information between two or more components or devices. The term "interface circuitry" may refer to one or more hardware interfaces, for example, buses, I/O interfaces, peripheral component interfaces, network interface cards, and/or the like.

The term "user equipment" or "UE" as used herein refers to a device with radio communication capabilities and may describe a remote user of network resources in a communications network. The term "user equipment" or "UE" may be considered synonymous to, and may be referred to as, client, mobile, mobile device, mobile terminal, user terminal, mobile unit, mobile station, mobile user, subscriber, user, remote station, access agent, user agent, receiver, radio equipment, reconfigurable radio equipment, reconfigurable mobile device, etc. Furthermore, the term "user equipment" or "UE" may include any type of wireless/wired device or any computing device including a wireless communications interface.

The term "network element" as used herein refers to physical or virtualized equipment and/or infrastructure used to provide wired or wireless communication network services. The term "network element" may be considered synonymous to and/or referred to as a networked computer, networking hardware, network equipment, network node, router, switch, hub, bridge, radio network controller, RAN device, RAN node, gateway, server, virtualized VNF, NFVI, and/or the like.

The term "computer system" as used herein refers to any type interconnected electronic devices, computer devices, or components thereof. Additionally, the term "computer system" and/or "system" may refer to various components of a computer that are communicatively coupled with one another. Furthermore, the term "computer system" and/or "system" may refer to multiple computer devices and/or multiple computing systems that are communicatively coupled with one another and configured to share computing and/or networking resources.

The term "appliance," "computer appliance," or the like, as used herein refers to a computer device or computer system with program code (e.g., software or firmware) that is specifically designed to provide a specific computing resource. A "virtual appliance" is a virtual machine image to be implemented by a hypervisor-equipped device that virtualizes or emulates a computer appliance or otherwise is dedicated to provide a specific computing resource.

The term "resource" as used herein refers to a physical or virtual device, a physical or virtual component within a computing environment, and/or a physical or virtual component within a particular device, such as computer devices, mechanical devices, memory space, processor/CPU time, processor/CPU usage, processor and accelerator loads, hardware time or usage, electrical power, input/output operations, ports or network sockets, channel/link allocation, throughput, memory usage, storage, network, database and applications, workload units, and/or the like. A "hardware resource" may refer to compute, storage, and/or network resources provided by physical hardware element(s). A "virtualized resource" may refer to compute, storage, and/or network resources provided by virtualization infrastructure to an application, device, system, etc. The term "network resource" or "communication resource" may

refer to resources that are accessible by computer devices/systems via a communications network. The term "system resources" may refer to any kind of shared entities to provide services, and may include computing and/or network resources. System resources may be considered as a set of coherent functions, network data objects or services, accessible through a server where such system resources reside on a single host or multiple hosts and are clearly identifiable.

The term "channel" as used herein refers to any transmission medium, either tangible or intangible, which is used to communicate data or a data stream. The term "channel" may be synonymous with and/or equivalent to "communications channel," "data communications channel," "transmission channel," "data transmission channel," "access channel," "data access channel," "link," "data link," "carrier," "radiofrequency carrier," and/or any other like term denoting a pathway or medium through which data is communicated. Additionally, the term "link" as used herein refers to a connection between two devices through a RAT for the purpose of transmitting and receiving information.

The terms "instantiate," "instantiation," and the like as used herein refers to the creation of an instance. An "instance" also refers to a concrete occurrence of an object, which may occur, for example, during execution of program code.

The terms "coupled," "communicatively coupled," along with derivatives thereof are used herein. The term "coupled" may mean two or more elements are in direct physical or electrical contact with one another, may mean that two or more elements indirectly contact each other but still cooperate or interact with each other, and/or may mean that one or more other elements are coupled or connected between the elements that are said to be coupled with each other. The term "directly coupled" may mean that two or more elements are in direct contact with one another. The term "communicatively coupled" may mean that two or more elements may be in contact with one another by a means of communication including through a wire or other interconnect connection, through a wireless communication channel or link, and/or the like.

The term "information element" refers to a structural element containing one or more fields. The term "field" refers to individual contents of an information element, or a data element that contains content.

The term "SMTC" refers to an SSB-based measurement timing configuration configured by *SSB-MeasurementTimingConfiguration*.

The term "SSB" refers to an SS/PBCH block.

The term "a "Primary Cell" refers to the MCG cell, operating on the primary frequency, in which the UE either performs the initial connection establishment procedure or initiates the connection re-establishment procedure.

The term "Primary SCG Cell" refers to the SCG cell in which the UE performs random access when performing the Reconfiguration with Sync procedure for DC operation.

The term "Secondary Cell" refers to a cell providing additional radio resources on top of a Special Cell for a UE configured with CA.

The term "Secondary Cell Group" refers to the subset of serving cells comprising the PSCell and zero or more secondary cells for a UE configured with DC.

The term "Serving Cell" refers to the primary cell for a UE in RRC_CONNECTED not configured with CA/DC there is only one serving cell comprising of the primary cell.

The term "serving cell" or "serving cells" refers to the set of cells comprising the Special Cell(s) and all secondary cells for a UE in RRC_CONNECTED configured with CA/.

The term "Special Cell" refers to the PCell of the MCG or the PSCell of the SCG for DC operation; otherwise, the term "Special Cell" refers to the Pcell.

## CLAIMS

1. One or more non-transitory computer-readable media (NTCRM) having instructions, stored thereon, that when executed by one or more processors of a user equipment (UE) cause the UE to:

receive configuration information for transmission of a physical uplink shared channel (PUSCH) with repetitions to multiple transmission-reception points (TRPs); and

encode the PUSCH with repetitions for transmission to the multiple TRPs based on the configuration information.

2. The one or more NTCRM of claim 1, wherein the PUSCH is a configured grant (CG) PUSCH.

3. The one or more NTCRM of claim 1, wherein the PUSCH is a Type-1 CG PUSCH, and wherein the configuration information includes a ConfiguredGrantConfig information element (IE) with at least two srs-ResourceIndicator parameters and/or at least two PrecodingAndNumberOfLayers parameters.

4. The one or more NTCRM of claim 1, wherein the PUSCH is a Type-2 CG PUSCH, and wherein the configuration information is included in a downlink control information (DCI).

5. The one or more NTCRM of claim 4, wherein the configuration information includes one or more of a sounding reference signal (SRS) resource indicator (SRI), precoding information, or a number of layers for the repetitions to different TRPs of the multiple TRPs.

6. The one or more NTCRM of claim 1, wherein the configuration information includes an indication of a beam switching gap for the PUSCH with repetitions.

7. The one or more NTCRM of claim 6, wherein the PUSCH with repetitions is a Type-B PUSCH repetition.

8. The one or more NTCRM of any one of claims 1-7, wherein the configuration information includes an indication of a default sounding reference signal (SRS) resource set ID for power control of the PUSCH with repetitions.

9. The one or more NTCRM of any one of claims 1-7, wherein the PUSCH has a transmission rank greater than 2, and wherein the configuration information includes a two-bit field to indicate one or more PTRS port – DMRS port associations for the PUSCH with repetitions.

10. One or more non-transitory computer-readable media (NTCRM) having instructions, stored thereon, that when executed by one or more processors of a next generation Node B (gNB) cause the gNB to:

encode, for transmission to a user equipment (UE), configuration information for transmission by the UE of a physical uplink shared channel (PUSCH) with repetitions to multiple transmission-reception points (TRPs); and

receive the PUSCH with repetitions based on the configuration information.

11. The one or more NTCRM of claim 10, wherein the PUSCH is a configured grant (CG) PUSCH.

12. The one or more NTCRM of claim 10, wherein the PUSCH is a Type-1 CG PUSCH, and wherein the configuration information includes a ConfiguredGrantConfig information element (IE) with at least two srs-ResourceIndicator parameters and/or at least two PrecodingAndNumberOfLayers parameters.

13. The one or more NTCRM of claim 10, wherein the PUSCH is a Type-2 CG PUSCH, and wherein the configuration information is included in a downlink control information (DCI).

14. The one or more NTCRM of claim 13, wherein the configuration information includes one or more of a sounding reference signal (SRS) resource indicator (SRI), precoding information, or a number of layers for the repetitions to different TRPs of the multiple TRPs.

15. The one or more NTCRM of claim 10, wherein the configuration information includes an indication of a beam switching gap for the PUSCH with repetitions.

16. The one or more NTCRM of claim 15, wherein the PUSCH with repetitions is a Type-B PUSCH repetition.

17. The one or more NTCRM of any one of claims 10-16, wherein the configuration information includes an indication of a default sounding reference signal (SRS) resource set ID for power control of the PUSCH with repetitions.

18. The one or more NTCRM of any one of claims 10-16, wherein the PUSCH has a transmission rank greater than 2, and wherein the configuration information includes a two-bit field to indicate one or more PTRS port – DMRS port associations for the PUSCH with repetitions.

19. An apparatus to be implemented in a user equipment (UE), the apparatus comprising:

a memory to store information to associate a demodulation reference signal (DMRS) port with a phase tracking reference signal (PTRS) port for a physical uplink shared channel (PUSCH) transmission with repetitions to multiple transmission-reception points (TRPs); and

processor circuitry coupled to the memory, the processor circuitry to:

receive a downlink control information (DCI) to schedule the PUSCH transmission with repetitions, wherein the PUSCH transmission has a transmission rank greater than 2, and wherein the DCI includes a two-bit field to indicate a PTRS port – DMRS port association based on the information; and

encode the PUSCH transmission based on the two-bit field.

20. The apparatus of claim 19, wherein the repetitions to the same TRP use a same PTRS port – DMRS port association.

21. The apparatus of claim 19, wherein each repetition uses a different respective PTRS port – DMRS port association, and wherein at least one of the PTRS port – DMRS port associates is fixed and not dynamically indicated by the two-bit field.

22. The apparatus of any one of claims 19-21, wherein the processor circuitry is further to encode semi-persistent channel state information (SP-CSI) for transmission in two of the repetitions to respective different TRPs.

```
ConfiguredGrantConfig ::=       SEQUENCE {
    ...
    repK                        ENUMERATED {n1, n2, n4, n8},
    ...
    periodicity                 ENUMERATED {sym2, sym7, ..., sym2560x12},
    ...
    rrc-ConfiguredUplinkGrant   SEQUENCE {
        ...
        precodingAndNumberOfLayers      INTEGER (0..63),
        srs-ResourceIndicator           INTEGER (0..15)         OPTIONAL,
        ...
    }
    rrc-ConfiguredUplinkGrant2  SEQUENCE {
        ...
        precodingAndNumberOfLayers      INTEGER (0..63),
        srs-ResourceIndicator           INTEGER (0..15)         OPTIONAL,
    }
    ...
}
```

Figure 1

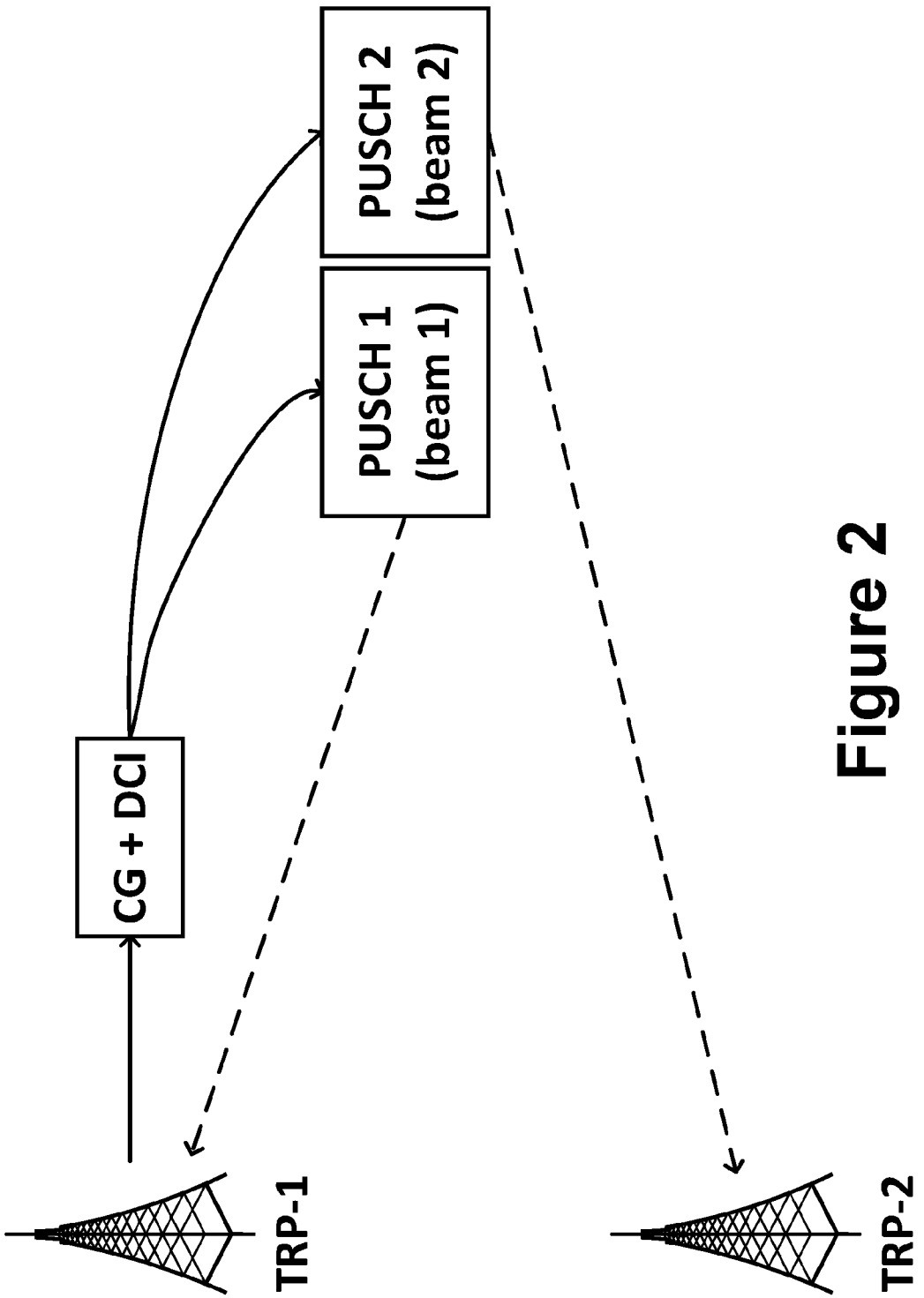


Figure 2

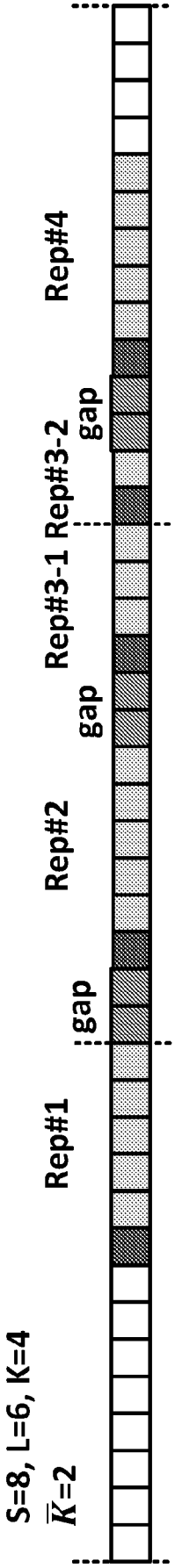


Figure 3A

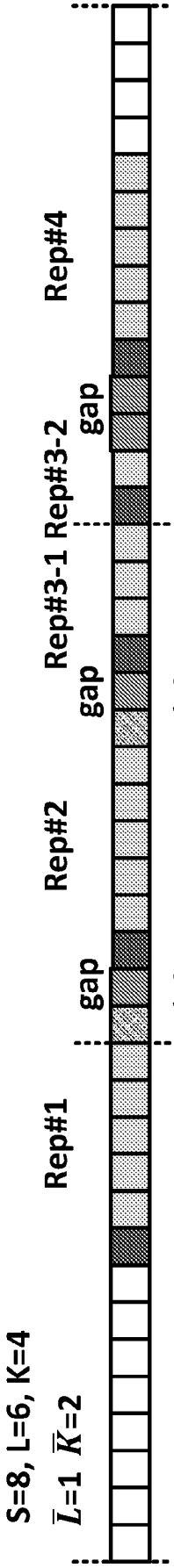


Figure 3B

```
PUSCH-PowerControl ::= SEQUENCE {
    tpc-Accumulation                ENUMERATED { disabled }                 OPTIONAL, -- Need S
    msg3-Alpha                      Alpha                                   OPTIONAL, -- Need S
    p0-NominalWithoutGrant          INTEGER (-202..24)                      OPTIONAL, -- Need M
    p0-AlphaSets                    SEQUENCE (SIZE (1..maxNrofP0-PUSCH-AlphaSets)) OF P0-PUSCH-AlphaSet
                                                                            OPTIONAL, -- Need M
    pathlossReferenceRSToAddModList SEQUENCE (SIZE (1..maxNrofPUSCH-PathlossReferenceRSs)) OF PUSCH-PathlossReferenceRS
                                                                            OPTIONAL, -- Need N
    pathlossReferenceRSToReleaseList SEQUENCE (SIZE (1..maxNrofPUSCH-PathlossReferenceRSs)) OF PUSCH-
PathlossReferenceRS-Id
                                                                            OPTIONAL, -- Need N
    twoPUSCH-PC-AdjustmentStates    ENUMERATED {twoStates}                  OPTIONAL, -- Need S
    deltaMCS                        ENUMERATED {enabled}                    OPTIONAL, -- Need S
    sri-PUSCH-MappingToAddModList SEQUENCE (SIZE (1..maxNrofSRI-PUSCH-Mappings)) OF SRI-PUSCH-PowerControl
                                                                            OPTIONAL, -- Need N
    sri-PUSCH-MappingToReleaseList SEQUENCE (SIZE (1..maxNrofSRI-PUSCH-Mappings)) OF SRI-PUSCH-PowerControlId
                                                                            OPTIONAL -- Need N
}
```

```
SRI-PUSCH-PowerControl ::= SEQUENCE {
    sri-PUSCH-PowerControlId        SRI-PUSCH-PowerControlId,
    sri-PUSCH-PathlossReferenceRS-Id PUSCH-PathlossReferenceRS-Id,
    sri-P0-PUSCH-AlphaSetId         P0-PUSCH-AlphaSetId,
    sri-PUSCH-ClosedLoopIndex       ENUMERATED { i0, i1 }
}
```

Figure 4

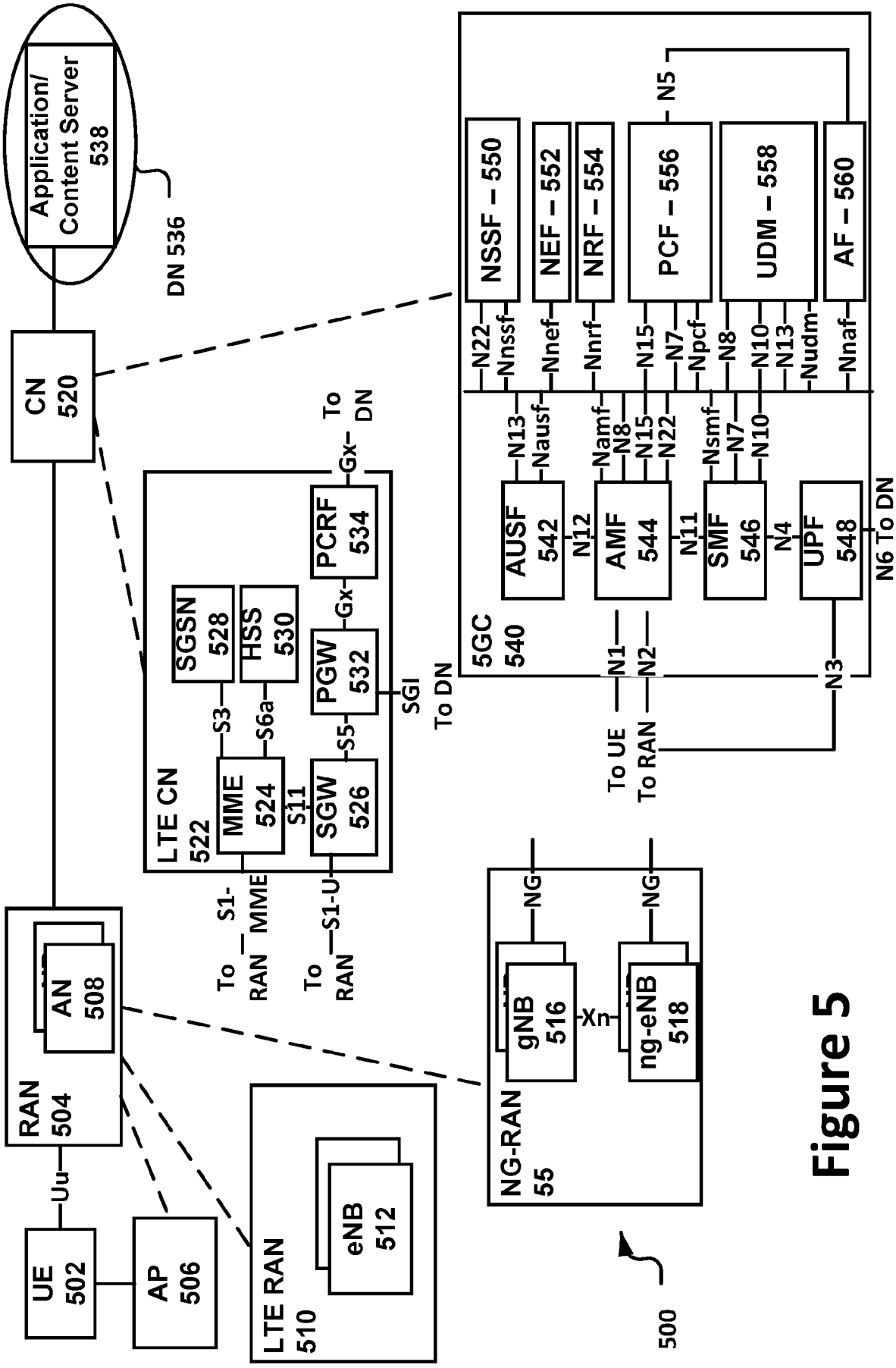
Application/
Content Server
538
DN 536
CN
520
NSSF – 550
NEF – 552
NRF – 554
PCF – 556
UDM – 558
AF – 560
N5
N22
Nnssf
Nnef
Nnrf
N15
N7
Npcf
N8
N10
N13
Nudm
Nnaf
N13
Nausf
Namf
N8
N15
N22
Nsmf
N7
N10
AUSF
542
N12
AMF
544
N11
SMF
546
N4
UPF
548
N6 To DN
5GC
540
N1
N2
N3
To UE
To RAN
To DN
To
DN
Gx
PCRF
534
Gx
SGSN
528
HSS
530
PGW
532
SGi
S3
S6a
S5
LTE CN
522
MME
524
S11
SGW
526
To
RAN
S1-
MME
To
RAN
S1-U
RAN
504
AN
508
Uu
UE
502
AP
506
LTE RAN
510
eNB
512
NG
NG
gNB
516
Xn
ng-eNB
518
NG-RAN
55
500

Figure 5

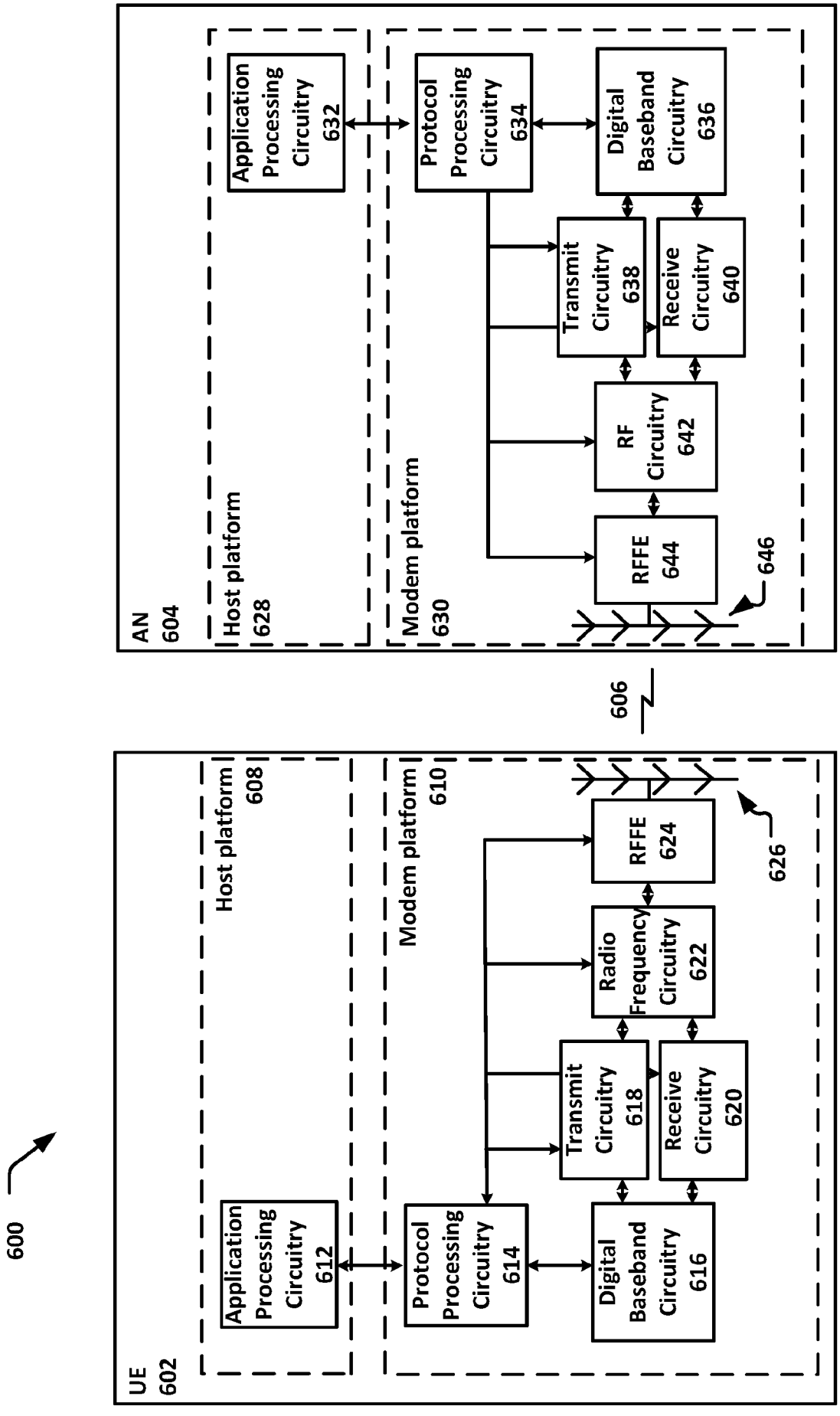
600
UE
602
Host platform
608
Application Processing Circuitry
612
Modem platform
610
Protocol Processing Circuitry
614
Digital Baseband Circuitry
616
Transmit Circuitry
618
Receive Circuitry
620
Radio Frequency Circuitry
622
RFFE
624
626
606
AN
604
Host platform
628
Application Processing Circuitry
632
Modem platform
630
Protocol Processing Circuitry
634
Digital Baseband Circuitry
636
Transmit Circuitry
638
Receive Circuitry
640
RF Circuitry
642
RFFE
644
646

Figure 6

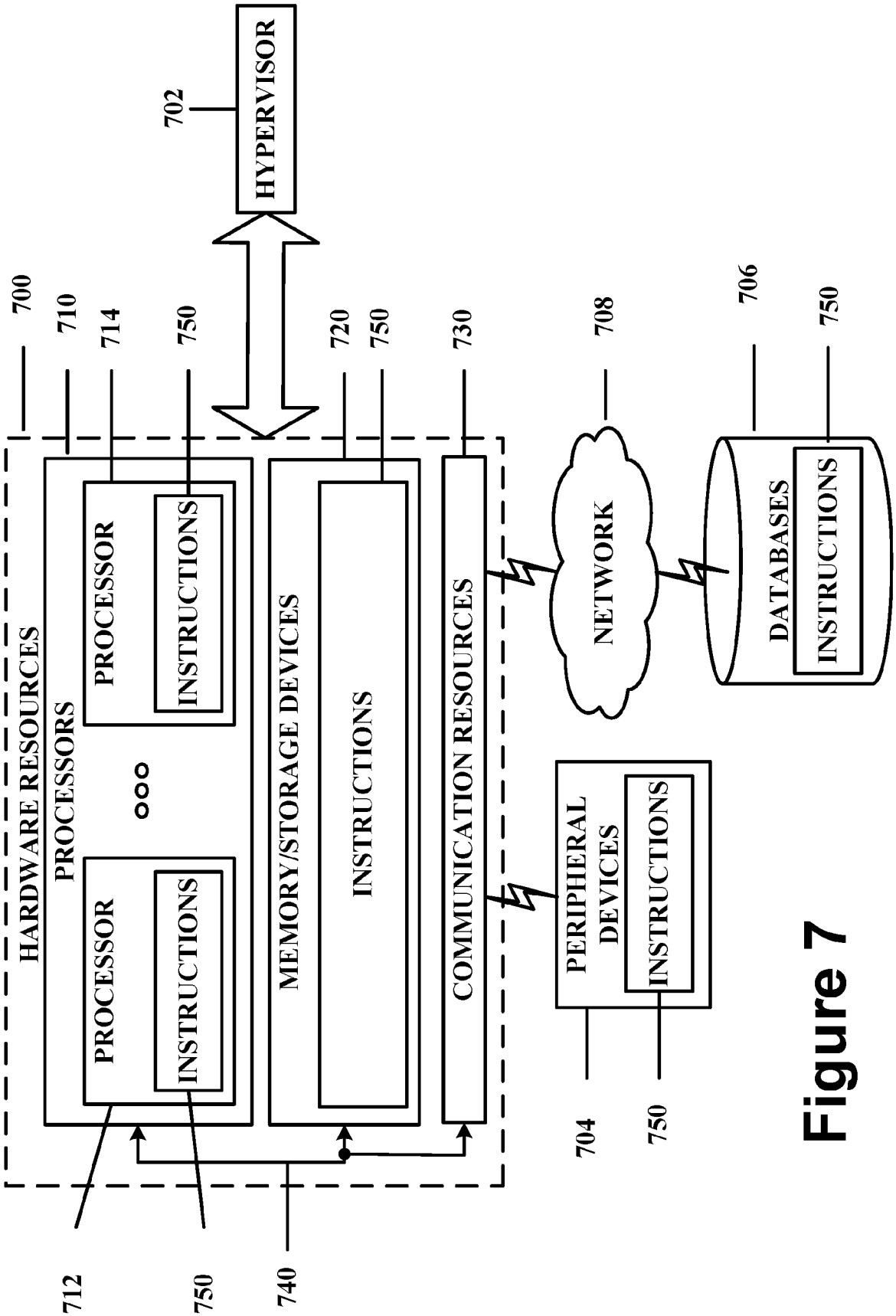
HYPERVISOR
702
HARDWARE RESOURCES
700
PROCESSORS
710
PROCESSOR
714
INSTRUCTIONS
750
PROCESSOR
INSTRUCTIONS
MEMORY/STORAGE DEVICES
720
INSTRUCTIONS
750
COMMUNICATION RESOURCES
730
NETWORK
708
DATABASES
706
INSTRUCTIONS
750
PERIPHERAL DEVICES
704
INSTRUCTIONS
750
712
750
740

Figure 7

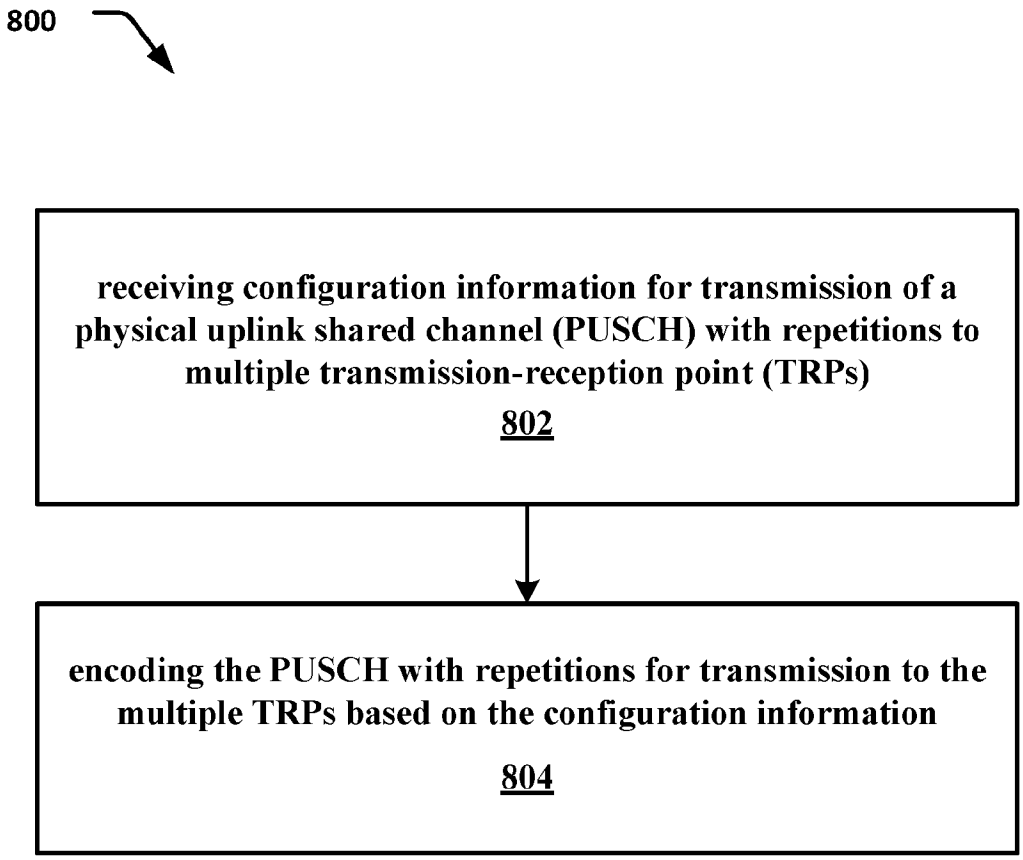
800
receiving configuration information for transmission of a physical uplink shared channel (PUSCH) with repetitions to multiple transmission-reception point (TRPs)
802
encoding the PUSCH with repetitions for transmission to the multiple TRPs based on the configuration information
804

Figure 8

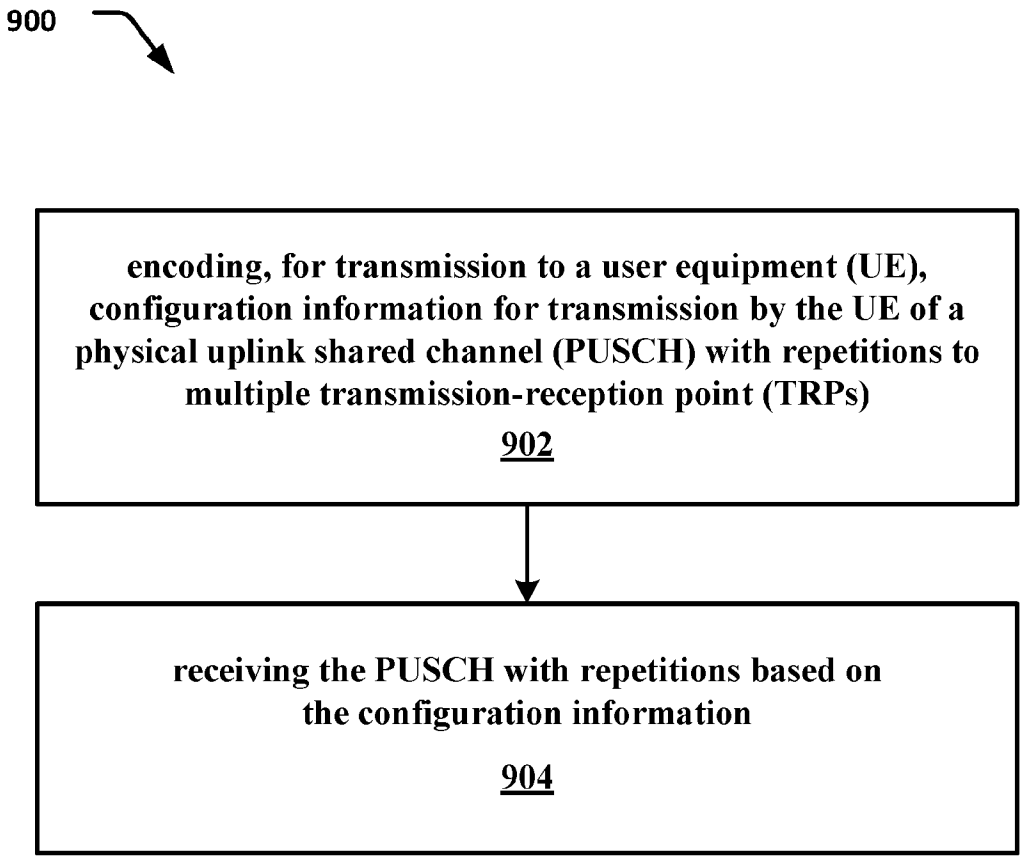
900
encoding, for transmission to a user equipment (UE), configuration information for transmission by the UE of a physical uplink shared channel (PUSCH) with repetitions to multiple transmission-reception point (TRPs)
902
receiving the PUSCH with repetitions based on the configuration information
904

Figure 9

# INTERNATIONAL SEARCH REPORT

International application No.
**PCT/US2022/023482**

## A. CLASSIFICATION OF SUBJECT MATTER

**H04W 72/12**(2009.01)i; **H04W 72/14**(2009.01)i; **H04W 72/04**(2009.01)i; **H04L 1/00**(2006.01)i; **H04L 5/00**(2006.01)i; **H04B 7/06**(2006.01)i; **H04L 1/08**(2006.01)i

According to International Patent Classification (IPC) or to both national classification and IPC

## B. FIELDS SEARCHED

Minimum documentation searched (classification system followed by classification symbols)

H04W 72/12(2009.01); H04L 1/18(2006.01); H04L 5/00(2006.01)

Documentation searched other than minimum documentation to the extent that such documents are included in the fields searched

Korean utility models and applications for utility models
Japanese utility models and applications for utility models

Electronic data base consulted during the international search (name of data base and, where practicable, search terms used)

eKOMPASS(KIPO internal) & Keywords: multi-TRP(multi transmission-reception point), repetition, PUSCH(physical uplink shared channel), DMRS(demodulation referernce signal), PTRS(phase tracking reference signal)

## C. DOCUMENTS CONSIDERED TO BE RELEVANT

| Category* | Citation of document, with indication, where appropriate, of the relevant passages | Relevant to claim No. |
|---|---|---|
| X | QUALCOMM INCORPORATED, 'Enhancements on Multi-TRP for PDCCH, PUCCH and PUSCH', R1-2101447, 3GPP TSG RAN WG1 Meeting #104-e, 19 January 2021<br>sections 4-4.6 | 1-22 |
| A | LENOVO et al., `Enhancement on Multi-TRP for PDCCH, PUCCH and PUSCH', R1-2100274, 3GPP TSG RAN WG1 Meeting #104-e, 18 January 2021<br>sections 1-4.5 | 1-22 |
| A | ASIA PACIFIC TELECOM, `Discussion on enhancements on multi-TRP for uplink channels', R1-2006637, 3GPP TSG RAN WG1 #102-e, 08 August 2020<br>sections 1-2 | 1-22 |
| A | OPPO, `Enhancements on multi-TRP for PDCCH, PUCCH and PUSCH', R1-2100119, 3GPP TSG RAN WG1 Meeting #104-e, 19 January 2021<br>sections 1-4.6 | 1-22 |
| A | US 2020-0106559 A1 (USA VILAIPORNSAWAI et al.) 02 April 2020 (2020-04-02)<br>paragraphs [0132]-[0362]; and figures 1-19 | 1-22 |

☐ Further documents are listed in the continuation of Box C. ☑ See patent family annex.

* Special categories of cited documents:
"A" document defining the general state of the art which is not considered to be of particular relevance
"D" document cited by the applicant in the international application
"E" earlier application or patent but published on or after the international filing date
"L" document which may throw doubts on priority claim(s) or which is cited to establish the publication date of another citation or other special reason (as specified)
"O" document referring to an oral disclosure, use, exhibition or other means
"P" document published prior to the international filing date but later than the priority date claimed
"T" later document published after the international filing date or priority date and not in conflict with the application but cited to understand the principle or theory underlying the invention
"X" document of particular relevance; the claimed invention cannot be considered novel or cannot be considered to involve an inventive step when the document is taken alone
"Y" document of particular relevance; the claimed invention cannot be considered to involve an inventive step when the document is combined with one or more other such documents, such combination being obvious to a person skilled in the art
"&" document member of the same patent family

| Date of the actual completion of the international search | Date of mailing of the international search report |
|---|---|
| **15 July 2022** | **19 July 2022** |

| Name and mailing address of the ISA/KR | Authorized officer |
|---|---|
| **Korean Intellectual Property Office**<br>**189 Cheongsa-ro, Seo-gu, Daejeon**<br>**35208, Republic of Korea** | **YANG, JEONG ROK** |
| Facsimile No. **+82-42-481-8578** | Telephone No. **+82-42-481-5709** |

**INTERNATIONAL SEARCH REPORT**
**Information on patent family members**

International application No.
**PCT/US2022/023482**

| Patent document cited in search report | Publication date (day/month/year) | Patent family member(s) | Publication date (day/month/year) |
|---|---|---|---|
| US 2020-0106559 A1 | 02 April 2020 | BR 112021005848 A2 | 27 July 2021 |
| | | CA 3114263 A1 | 02 April 2020 |
| | | CN 112715011 A | 27 April 2021 |
| | | EP 3847773 A1 | 14 July 2021 |
| | | US 11050525 B2 | 29 June 2021 |
| | | WO 2020-063563 A1 | 02 April 2020 |