Nov. 17, 1936. E. H. CRAIG 2,061,221

GAME DEVICE

Filed March 20, 1935 3 Sheets-Sheet 1

Fig. 1.

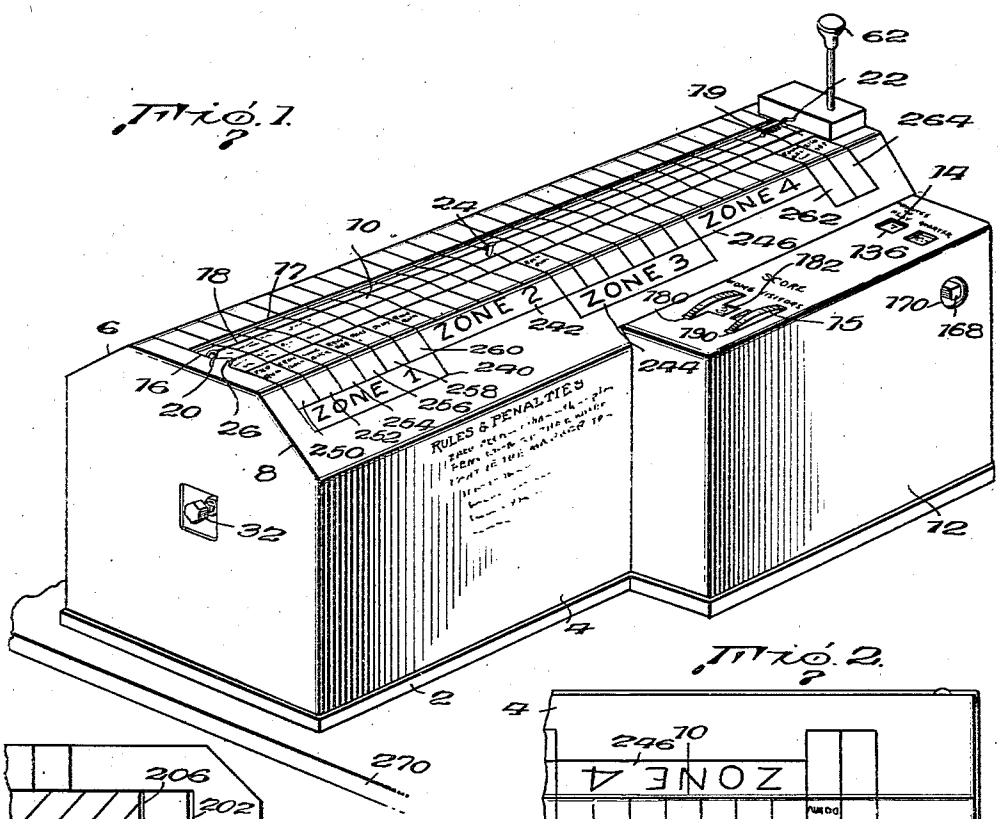

Fig. 2.

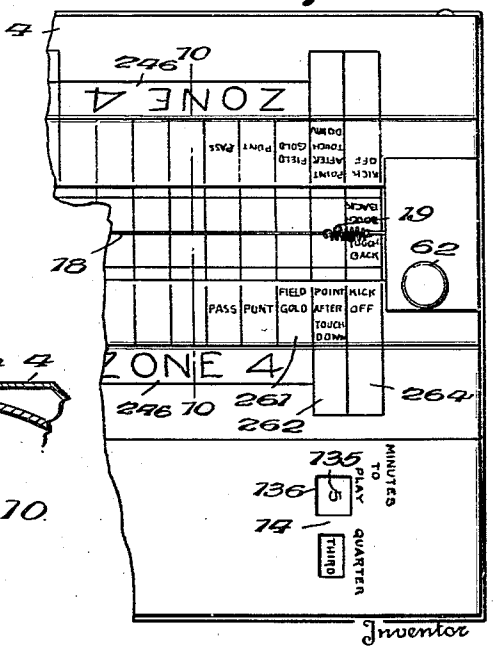

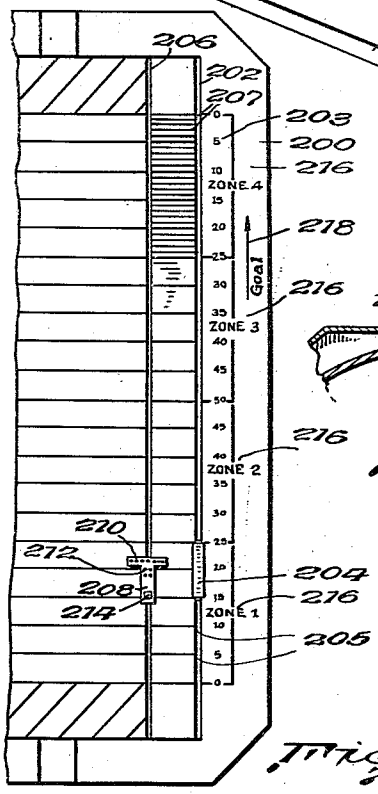

Fig. 3.

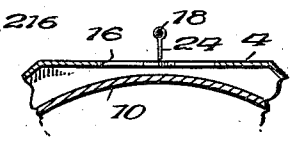

Fig. 10.

Inventor

Edwin H. Craig,

By James M. Graves

Attorney

Nov. 17, 1936. E. H. CRAIG 2,061,221

GAME DEVICE

Filed March 20, 1935 3 Sheets-Sheet 2

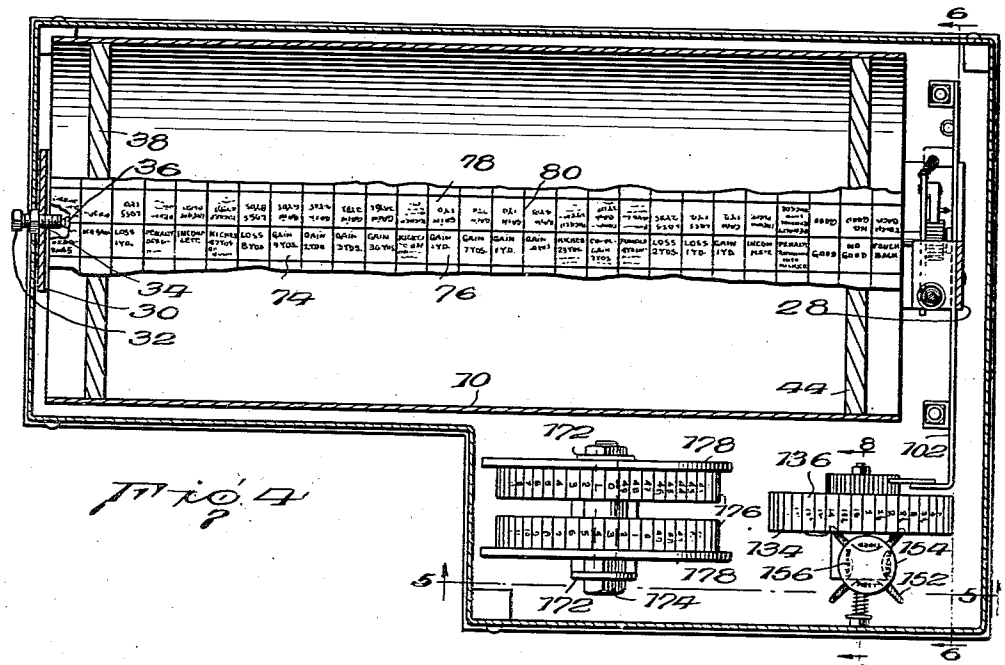

Fig. 4

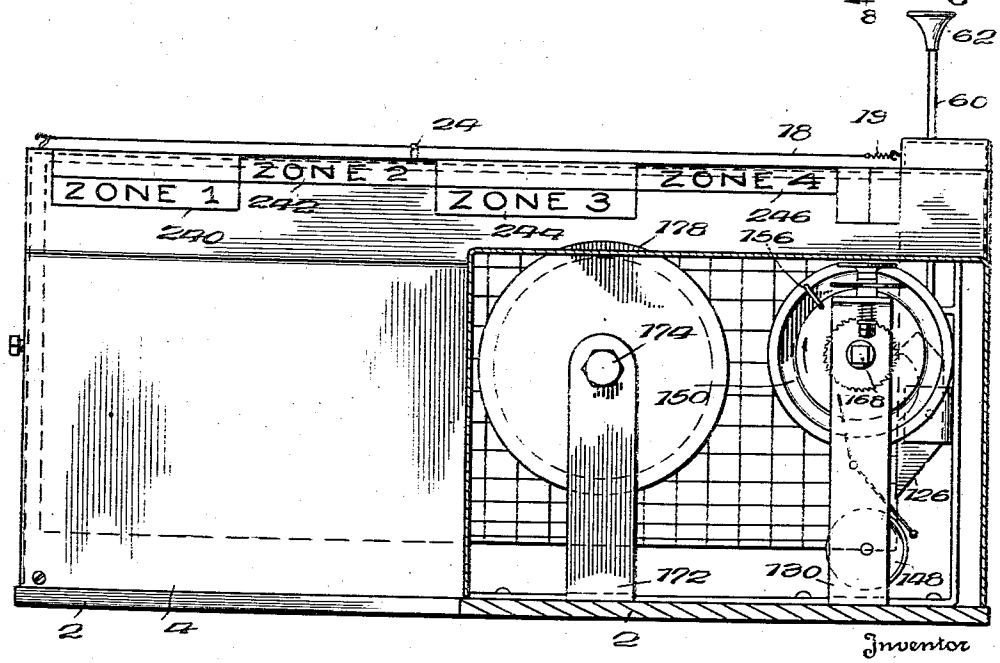

Fig. 5

Inventor

Edwin H. Craig,

By James M. Graves

Attorney

Nov. 17, 1936. E. H. CRAIG 2,061,221

GAME DEVICE

Filed March 20, 1935 3 Sheets-Sheet 3

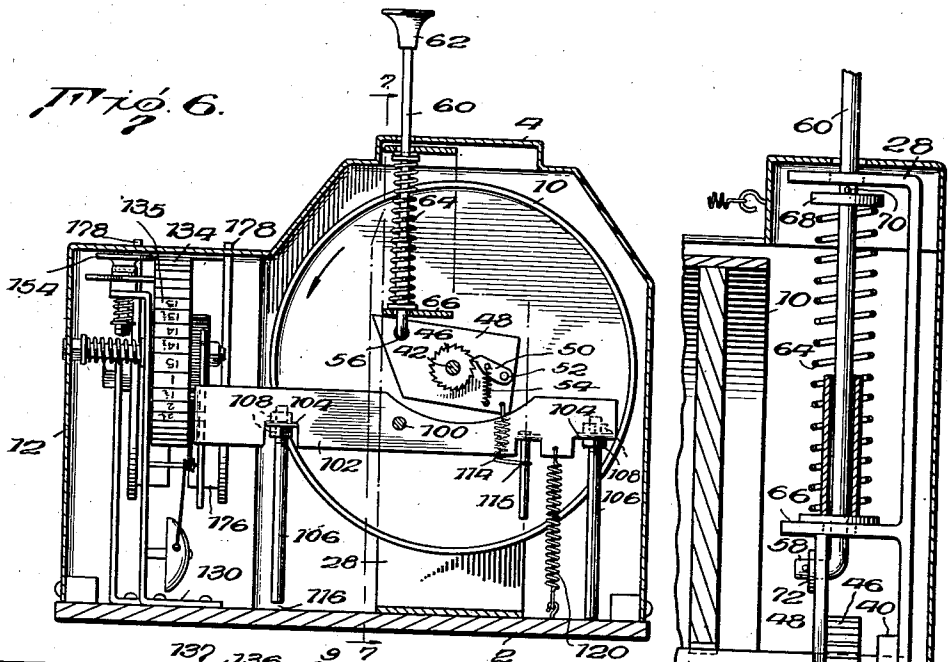

Fig. 6.

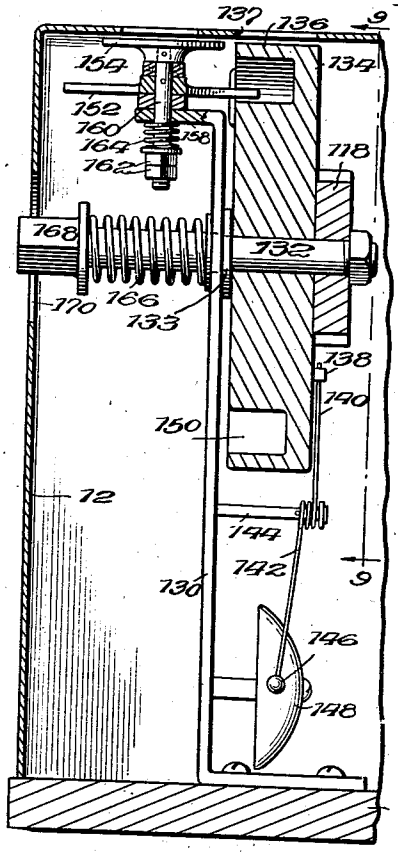

Fig. 8.

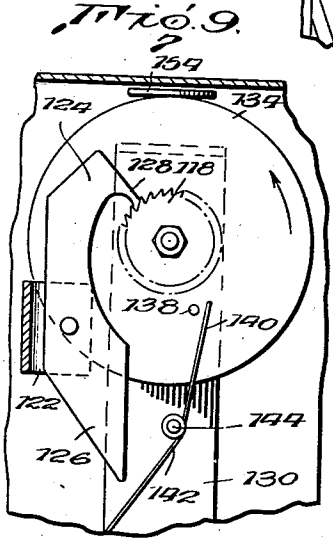

Fig. 9.

Fig. 7.

Inventor
Edwin H. Craig.

By James M. Graves
Attorney

Patented Nov. 17, 1936 2,061,221

UNITED STATES PATENT OFFICE

2,061,221

GAME DEVICE

Edwin H. Craig, Shippensberg, Pa.

Application March 20, 1935, Serial No. 12,077

8 Claims. (Cl. 273—94)

This invention relates to a game device similar to football for two opposing teams in which the quarterbacks of the respective teams when on the offensive preselect the particular type of play believed most suitable under the conditions presented and by the operation of a playing mechanism determine the success or failure of the selected play and the extent thereof.

The invention includes the provision of various elements to simulate in appearance as well as in operation the actual playing conditions encountered in intercollegiate football, while at the same time preserving in so far as possible simplicity of means and operation to make the game attractive to football novices as well as students of this national sport.

For many years a football team's success was practically proportional to the average weight of the players but with the introduction of more open play and superior field generalship on the part of the quarterbacks conditions changed until at the present time the importance of weight has been minimized. The character of the game from the spectator's view has also changed. Instead of seeing one team conquer another by wearing it down through plays of force a spectator sees short line drives, off tackles, passes, end runs, cross bucks, reverses, lateral passes, as well as their modifications, according to the selection of the particular play by the offensive quarterback. In selecting a play the quarterback considers a number of factors including the previous success of a certain play, the position of the ball on the field, the yards to go for first down, the number of downs remaining and many others. The defensive team tries to anticipate the play as does also the spectator who, if the play is unsuccessful, feels that the offensive quarterback selected the wrong play under the circumstances. Such spectator thinks that if he could have determined the play to be used the result would have been a substantial gain instead of the loss probably incurred.

The game forming the subject of this invention is designed to give the player an opportunity to act as field general or quarterback and after appraising the position of the ball on the field, the number of downs remaining, and the yards to go preselect that type of play which he feels should be successful. Then having selected his play he operates a playing mechanism including indicia of results based upon statistics from a large number of intercollegiate games to determine the success or failure of his play. In this way any person may enjoy all of the thrills of determining the strategy of his team.

A student of the game before selecting a play will at least subconsciously consider a number of factors since it is well recognized that the type of play to be employed depends upon the particular circumstances presented. For example, when a team is back against its own goal line, it will not, except in very rare instances, attempt a forward pass, and generally prefers to rely upon the more or less safe line plunge, or off tackle play, so that the danger of losing the ball to the opposing team under conditions which might be most favorable to the other team's making a touchdown is minimized.

When a team is in substantially the middle of the field, the play is generally more open and chances are taken on unusual types of plays, passes, and the like, which type of play is not so dangerous as when a team is near its own goal line, since, should a pass be intercepted, the opposing team will not be within striking distance of goal.

As the team progresses toward its opponent's goal the opposition becomes stiffer and gains are generally shorter, so that the type of play is, as a rule, more conservative, as was the case when the team was near its own goal line. These factors and many others based on actual games form the statistical basis for indicia on a playing mechanism.

In view of these varying types of plays that are normally resorted to, depending upon where the ball is in play, it is customary for the quarterback to mentally divide the field into various zones, resorting to particular types of plays according to the zone in which the ball is in play. The exact division varies with different coaches but a division of the field into approximately four equal zones probably represents an average division of the field.

The game device of the instant invention recognizes these differences in type of play and the varying success attending particular plays in given zones.

As a result of statistics based upon a large number of intercollegiate football games, it has been found that within the zones particular plays result in a certain number of gains, or losses of varying amounts and frequencies as well as some penalties. For example, in the zone closest to the opponent's goal, the chances of success on a forward pass are relatively small but, on the other hand, an occasionally successful pass generally results in a touchdown while there is also

a possibility of an interception. These results based upon a study of a large number of college football games are set forth more in detail hereinafter.

The game device forming the subject-matter of this invention includes a playing field with suitable indicia to indicate the side lines, goal lines, goal posts, etc., and a selector for indicating the particular play to be used under the circumstances presented. This selector is coupled with an instrument operated by but not under the control of the player for determining the success or failure of the particular play and the extent thereof.

It has been proposed to provide games simulating football in which various mechanisms are used to determine the success or failure of a particular play for the team in possession of the ball. However, those games of the prior art were dependent solely upon chance and the skill of the player in preselecting a particular type of play, depending upon the position of the ball, the down, and the yards to go was not a factor in the game.

It is, therefore, one of the primary objects of this invention to provide a game device which is readily understood, trouble free, practical, and of a type simulating football in which the opposing players can, before each play, select that type of play, which they believe to be the best type and the most successful under the conditions presented.

It is also an object of this invention to provide a football game useful for teaching players the fine points of the game or giving persons who are only spectators an opportunity to determine the plays used in real games.

Another object involves the provision of a game having all of the elements and types of plays normally occurring in a football game and in which the chances of success are substantially the same as those usually attendant upon a particular type of play in a regulation football game.

A further object includes the provision of a game board and accessories to simulate a playing field.

Another object is to provide an instrument by means of which a player may preselect and set a visible indicator for the particular type of play which he proposes to make.

A still further object includes the provision of an instrument operated by the player, but not specifically under his control, which, through an element of chance, although based upon statistics, indicates the success or failure, and extent thereof, attendant upon the particular play proposed.

A more particular object is to provide a game device wherein a surface with suitable indicia to simulate a playing field is used in combination with a playing mechanism including a movable element having thereon a plurality of sets of individual indicia, means for designating a particular set of indicia, and means to cause the indicia element to move until an individual indicia of the designated set of indicia is opposite the designating means.

These and other objects which will be apparent from the sequent description are all embraced within this invention which is hereinafter more particularly described as to a specific embodiment, which embodiment is illustrated in the drawings forming a part of this application, and in which:

Figure 1 is a perspective view showing the playing instrument on which the particular play is selected and which, after suitable operation by the player, indicates the result of that play;

Fig. 2 is a plan view of one end of the playing mechanism shown in Fig. 1;

Fig. 3 is a plan view showing about half of the playing field;

Fig. 4 is a top view of the playing mechanism with the cover removed and a portion of the cylinder in cross-section;

Fig. 5 is a view in section along the line 5—5 of Fig. 4, looking in the direction of the arrows;

Fig. 6 is a view in section along the line 6—6 of Fig. 4, looking in the direction of the arrows;

Fig. 7 is a sectional view along the line 7—7 of Fig. 6, looking in the direction of the arrows;

Fig. 8 is a view in section along the line 8—8 of Fig. 4, looking in the direction of the arrows;

Fig. 9 is a view in section along the line 9—9, looking in the direction of the arrows of Fig. 8, and

Fig. 10 is a view in section along the line 10—10 of Fig. 2.

The playing instrument comprises a suitable base member 2 for mounting the various parts comprising the instrument which are enclosed within a casing 4. The casing 4 is generally rectangular in shape with the upper corners 6 and 8 broken away to generally follow the contour of a cylinder 10 or a plurality of cylinders rotatably mounted therein. At one end, or, as illustrated, along one side, cover member 4 is enlarged, as at 12, to enclose a timing mechanism 14, and a scoring mechanism 15. At the top of the casing 4, a long rectangular opening 16 exposes a small portion of the cylinder 10, so that the indicia on the cylinder may be read by the players. Extending along the middle of the rectangular opening 16 is a wire 18 attached to the top of the instrument case 4, at one end by a small hook 20, and at the other end by another small hook 22. The wire 18 may be kept taut by a short tension spring 19. As will be evident other means for keeping the wire 18 tight may be used instead of the spring 19 illustrated. Slidably attached to the wire 18 is an indicator 24 serving as a play selector that may be moved for practically the entire length of the opening 16.

The play selector 24 is slidable along the wire 18 and may be set to indicate the particular play desired before the playing mechanism is operated. The wire 18 and indicator 24 represent only one form of play selector. Another form might include a small slidable tab projecting from one side 17 of the opening 16 or a cross bar between the side 17 and the opposing parallel edge of the opening 16. The important feature is to provide suitable means for indicating the selected play before the playing mechanism is operated. A small V-shaped projection 26, at one end of the rectangular opening 16, is directly beneath the wire 18 and indicates the central line of the rectangular opening.

Within the casing 4 a rotatable element in the form a cylinder 10 is mounted. The rotatable element is provided with indicia correlated with the plays indicated on the casing 4 along the opening 16. Instead of employing a single cylinder actuated each time a plurality of cylinders independently operated could be used. An independent cylinder could be used for each play, each zone, or otherwise divided as desired. Instead of providing the result indicia of the playing mechanism on the circumference of a cylinder or cylinders, a flat disk could be substituted and enclosed

in a case with a radial opening. These and other modifications which will be apparent to those skilled in the art are all embraced within the scope of this invention.

In the illustrated embodiment of the cylinder 10 is mounted between upright brackets 28 and 30. The bracket 30 is threaded to receive a bolt 32, provided with a lock nut 34. A hollow portion at the threaded end of the bolt 32 is adapted to receive a pin on shaft 36, projecting from the center of a supporting disk 38 of the cylinder 10. The bolt 32 should be adjustable to take up play in the cylinder mountings and is held in adjusted position by the lock nut 34.

The bracket 28, supporting the opposite end of the cylinder 10, includes a bearing member 40, Fig. 7; to receive one end of a shaft 42, extending from the end of the cylinder 10 and supporting disk 44 thereof. Adjacent a ratchet 46 keyed to the shaft 42 is a rotatably mounted plate 48. A pawl 50 pivoted at 52, on the plate 48 and normally urged against the ratchet 46 by a spring 54, Fig. 6, transmits movement of the plate 48 in one direction to the ratchet 46 and to the cylinder 10. An opening 56 in the plate 48 is adapted to receive the bent end 58 of a rod 60, which extends through the casing 4, on the outside of which a knob 62 is placed. The rod 60 is slidably mounted in suitable openings in the bracket 28, and normally urged upwardly by a compression spring 64, held at one end by an extension 66 of the bracket 28, and at the other end by a washer 68 keyed onto the rod 60 by a key 70. A keyed washer 72 holds the bent end 58 of the rod 60 in the opening 56 of the plate 48.

The mechanism thus far described is that for rotatably actuating the cylinder 10. The player, by pressing firmly and rapidly on the knob 62, urges the rod 60 against the spring 64, and causes the plate 48 to rotate about the shaft 42. The pawl 50, engaging the ratchet 46, rotates the cylinder 10 in the direction indicated by the arrow in Fig. 6. When the operator's hand is removed from the knob 62, the spring 64 urges the rod 60 upward but the inertia of the drum causes it to continue its rotation until friction eventually causes it to stop. The pawl 50 urged against the ratchet 46 by the spring 54 tends to stop the cylinder at certain fixed positions and the indicia 74, Fig. 4, on the cylinder 10 is exposed through the rectangular opening 16. Since the opposing players will frequently be on opposite sides of the playing mechanism, it is preferable to provide the cylinder 10 with two sets of indicia 76 and 78, so that the results may be read on either side. The ratchet wheel 46 is so placed on the keyed shaft 42 that the dividing line 80 between two similar sets of indicia will normally line up with the V-shaped projection 26 under the wire 18.

The invention also includes mechanism for indicating the number of plays completed in a given interval such as a quarter, and also the number of quarters that have been played, as well as the particular quarter during which play is taking place. To this end there is mounted on the bracket 28, by a rivet 100, a relatively long rectangular lever 102. Angular projections therefrom, 104, provide anchors for rods 106 which, when the rectangular lever 102 is substantially horizontal, extend almost to the base 2. The rods 106 are adjustably attached to the lever by nuts 108. Another angular projection 110 from the rectangular lever 102 serves to anchor a short downwardly extending rod 112. A spring 114 is attached at one end to the plate 48 and, at the other end, is slidable upon the downwardly extending rod 112. The rods 106 are so adjusted that, when one of them is in contact with the base 2, there is a small amount of clearance 116 between the other rod 106 and the base 2. This clearance is regulated according to the size and number of teeth on a toothed wheel 118. A spring 120, anchored to the base 2, normally urges the rectangular lever 102 in a clockwise direction. At one end of the rectangular lever 102 it is bent at right-angles to form a projection 122 to which is pivotally riveted a dog 124, provided with a weighted end 126 to normally urge the tooth 128 into contact with the toothed wheel 118.

Another bracket 130 mounted on base member 2 extends upwardly to provide a rotatable mounting for a shaft 132. The shaft 132 on one side of the bracket 130 carries a spacing washer 133 and a flat cylindrical member 134 on the peripheral surface of which is suitable indicia 136 to indicate the number of plays accomplished, or the number of minutes remaining in a given quarter, or similar information. The flat cylindrical member 134 and the toothed wheel 118 are both fixed with reference to each other and to the shaft 132. When actuated by the dog 124, the toothed wheel 118 rotates the cylindrical member 134 step by step to expose successive indicia through the opening 137 in a portion of the auxiliary cover 12. On one face of the flat cylindrical member 134 is a projecting pin 138 that is adapted to engage one arm 140 of a bellcrank lever 142 pivoted on a shaft 144 mounted on the bracket 130. The other end of the bellcrank 142 is in the form of a striker to sound a bell 148, also mounted on the bracket 130. The pin 138 is so placed on the cylindrical member 134 that the bell 148 is rung once for each complete revolution of the cylindrical member 134 to provide an audible signal indicating that a certain number of plays have been made, or that a quarter has been played. If desired, more than one pin member 138 may be provided to give more frequent signals should that be desired.

An annular groove 150 in the cylindrical member 134 is adapted to receive one of the projecting arms 152 of a further indicating member 154. This indicating member 154 is provided with suitable indicia 156, Fig. 4, to indicate the number of revolutions of the first indicator 154 and may be calibrated to indicate quarters by "First", "Second", "Third", and "Fourth". The projecting arms 152 are moved a quarter of a revolution for each revolution of the cylindrical member 134 by a cross bar 156, extending across the annular groove 150. The indicator 154 is mounted on a member 158 bent at right-angles to the bracket 130 by a shaft 160 resiliently held in position by lock nuts 162, urging against a spring 164.

The cylindrical member 134 is also resiliently mounted by a compression spring 166 on the shaft 132, between the bracket 130 and a nut or handle 168 fixed to the shaft which extends through an opening 170 on the case member 4, to permit resetting of the indicators.

Depressing the rod 60 by forcing downwardly on the knob 62 not only acts to rotate the cylinder but also raises the loop 115 of the spring 114 until the loop engages the angular projection 110 when tension is applied to the spring 114, thereby causing the rectangular lever 102 to rotate very slightly in a counter-clockwise direction against the tension of spring 120. This slight rotation of the rectangular lever 102 causes the

portion 122 thereof to move downwardly, as viewed in Fig. 9, and to move the cylindrical member 134 an amount equivalent to the clearance 116, which clearance 116 is adjusted to be equal to a single tooth on the toothed wheel 118, thereby exposing a different portion of the indicia 135 through the opening 136.

When the knob 62 has been depressed a number of times equal to the number of individual divisions of the indicia 135 on the cylindrical member 134, a complete revolution thereof will have been accomplished; the bell 148 will be sounded and the indicator 154 moved to a new position, indicating visually in addition to the audible signal given by the bell 148, that the cylindrical member 134 has made a complete revolution.

In order to provide a convenient means for keeping the scores of the individual players, another bracket 172, Fig. 5, mounted on the base member 2, is provided with a shaft 174 on which are mounted two wheels 176, each provided with a flange 178, extending through openings 180, Fig. 1, for convenient manipulation on the outside of the case member 4 to expose, through openings 182, the score of each player.

The playing field is a substantially rectangular board 200 made of any suitable material, for example, wood, and is laid out as a conventional gridiron with side lines 202, which may be in the form of a groove to receive a 10-yard indicator 204. Another groove 206 is adapted to receive a playing piece 208, on which is shown a line of seven players 210, and a back field of four men 212. Also, mounted on playing piece 208 may be a small revolvable member 214 to indicate the particular "down". Along one of the side lines 202 are yard-markers 203 at 5 yard intervals running from zero, at one goal line, to 50 at the central stripe and decreasing to the other goal line. Between the 5 yard lines 205 may be short 1 yard lines 207 running between grooves 206 and 202. The 1 yard lines 207 are preferably lighter than the 5 yard stripes 205 and may extend all the way across the field if desired. Additional markers 216 along the side lines 202 divide the playing field into four substantially equal distances, which are designated as zones 1, 2, 3, and 4, with zone 4 as the area closest to a touchdown and zone 1 the area near the goal line being defended, as indicated by the arrow 218. The view of the playing field shown in Fig. 3 shows only about one-half of the field and the opposite half would be substantially the same except that the zones 216 and the arrow 218 would be reversed.

The playing mechanism is also provided with suitable indicia 240, 242, 244 and 246 to indicate zones 1, 2, 3, and 4, respectively, which zones correspond with those on the playing field. As shown in Fig. 2, the zone indicia on the playing mechanism is applied to both sides where a double set of indicia is provided on the cylinder 10 to enable the players to select their plays from either side and then read the results. Each zone has a plurality of plays which may be used in that zone, for example, as illustrated in Fig. 1, each zone is provided with six divisions 250, 252, 254, 256, 258, and 260, which may be respectively, as indicated: end run, cross buck, line buck, reverse, pass, and punt, so that a player, when in any of the zones, may select the play which he wishes to make. Zones 2, 3, and 4 are also provided with similar plays. In zone 4 which is that closest to a touchdown is indicia for another play, "drop kick" to permit a team to try this instead of a punt when within 25 yards of goal.

The playing mechanism may be placed on a boardlike member 270 on which are printed the rules of the game. The indicia on the cylinder 10 might read "Penalty offense; Holding" and by reference to the rules on the board 270 this would be interpreted as a loss of 15 yards. Other interpretations of the indicia on the cylinder 10 could be placed on the board 270 as may be necessary. Instead of printing the rules on an extra member 270 they could be put on the sides of the casing 4. In this case it may be especially desirable to arrange the time and quarter indicators as well as the scoring mechanism at the end of the playing mechanism to leave both of the entire sides of the casing 4 free.

Before operating the playing mechanism the scoring indicators are set so that zeros are exposed through the openings 182. The handle 168 on the end of the shaft 132, exposed through the opening 170 on the auxiliary casing 12, is turned until the quarter indicator 154 exposes the word "First" through the opening above it and the indicia 136 exposed through the opening 137 in the auxiliary casing 12 is that for the beginning of play.

The indicia on the flat cylindrical member 134 may be any arbitrarily selected but it has been found that the average play occupies approximately one-half minute and accordingly there are about thirty plays to a quarter. This fact makes it convenient to provide indicia 136 on the flat cylindrical member 134 as numerals running from fifteen to zero in half numeral integrals, i. e., 15, 14½, 14, 13½, which may be interpreted as minutes to play in the given quarter.

When the score indicators have been restored to zero, the quarter indicators set at "First" and the minute indicator set at 15, the playing mechanism is ready for initial operation.

The game is played by two teams each having a representative acting as quarterback to determine the plays that are used. The game may be begun as an ordinary football game by one of the players selecting his goal and the other deciding whether or not to kick off or to receive.

Since the first play necessarily begins with a kickoff, it is not generally necessary to set the play indicator adjacent the kickoff indicia on the casing 4, as this play will, of course, be readily understood.

The quarterback or some member of the team electing to "kick off" then depresses the knob 62 to actuate the playing device. Depressing the knob 62 sets the cylindrical member 10 rotating and also actuates the rectangular lever 102, causing the dog 124 to move the minute indicator 136 one step so that, at the end of the play, there is exposed through opening 137 the figures 14½, which operation is repeated each time the knob 62 is depressed for a "play" and a lower number exposed. The cylindrical member 10 rotates freely and not under further control of the knob 62 until friction gradually brings it to rest and the indicia 74, 78, and 80 is accordingly alined through the longitudinal opening 16 in the casing 4 by the spring 54 actuating the pawl 50 to engage the ratchet 46. When the cylindrical member 10 has come to rest, the result of the kickoff is read through the longitudinal opening 17 on that portion of the cylindrical member 10, which exposes the indicia opposite 264, corresponding to the kickoff.

In a game played by two opposing teams, the quarterback of the "visiting team" elected to kick off. He accordingly set the play indicator 24 opposite indicia 264 "kick off" and actuated the play-

ing mechanism by depressing the knob 62. When the cylindrical member 10 came to rest there was exposed through the longitudinal opening 16 beneath the indicator 24 the words "Touchback", indicating that the ball had been kicked over the opponent's goal line. A student of football would appreciate that the ball would be put back into play on the 20-yard line. If the persons playing are not strictly familiar with the rules of football, the term "Touchback" could be interpreted by the rules printed on the board 270, or on the sides of the casing 4, which would give the necessary information. The playing piece 208 would then be set in the groove 206 with the line 210 on the 20-yard line facing toward the goal, as indicated by the arrow 218. The 10-yard marker 204 would be set with one end on the 20-yard line and the other on the 30-yard line. The board is now arranged to indicate the position of the teams for the first play from scrimmage and the down marker 214 is turned so that the numeral 1 faces toward the side line 202.

The quarterback of the "home team" now in possession of the ball decides what play he wishes to use. From the indicia 216 on the side lines he will find that play is in zone 1, that is, within 24 yards of the goal which he is defending. This is the zone in which great care must be used to avoid fumbles or other acts which would put the opposing team in possession of the ball within close striking distance of goal and, accordingly, the quarterback will probably select a play such as line buck. Assume that he selects such a play, he sets the play indicator 24 opposite "line buck" 264 and operates the playing mechanism. When the cylindrical member 10 had come to rest, he found that the indicia exposed under the play indicator read "Gain 4 yards", and, accordingly, the playing piece 208 is moved forward 4 yards, so that the line 210 is on the 24-yard line. The down marker 214 is then turned to show that it is second down. Assume that the quarterback again decides to use a line buck. The result of this play, as determined by the playing mechanism, was a loss of 1 yard, so that the playing piece 208 must be moved backward until the line 210 is on the 23-yard line. It is now third down and, since the ball is in dangerous territory, the quarterback will probably elect to punt. He, therefore, moves the play indicator 24 until it is opposite the indicia 260 to indicate a punt and the playing mechanism again operated. The indicia on the cylindrical member 10 read "Out of bounds on own 39-yard line" which gives the "vistors" possession of the ball on their opponent's 39-yard line. The playing piece 208 is then moved over to the opposite side of the field so that the line 210 is on the 39-yard line but facing in the opposite direction from what it was for the first several plays. The 10-yard indicator 204, or another similar piece, is placed with one end on the 39-yard line and the other end on the 29-yard line.

Reference to the zone markers 216 on the opposite side of the field will show that when the team is between the 50-yard line and the 26-yard line in going toward their opponent's goal that they are in zone 3. The quarterback of the visiting team may then set the play indicator 24 opposite any of the plays on the playing mechanism in that zone. The quarterback thinking this is a good time for an end run, sets the play indicator 24 opposite the indicia indicating his play in zone 3. After operation of the playing mechanism, the result indicated by the exposed indicia on cylindrical element 10 opposite the play indicator is "Fumble, 4-yard loss, recovered by offense". The ball is, therefore, still in the possession of the "Visitors" but is on the 43-yard line with second down and fourteen to go. The quarterback of the "Visitors" now thinks that a play must be used which will gain a substantial amount of ground and, therefore, decides to pass, setting the play indicator 24 on the indicia in zone 3 opposite that indicating a pass. The operation of the playing mechanism determines that the pass is "Incomplete". It is, therefore, third down on the 43-yard line with 14 yards to go. As the next play, the quarterback calls for a reverse by setting the play indicator 24 opposite that play. After operating the playing mechanism the indicia on the cylindrical member 10 is "Loss 1 yard". With fourth down on the 44-yard line and 15 yards to go the quarterback naturally decides to punt and sets the play indicator 24 opposite that play. When the rotating cylinder 10 of the playing mechanism comes to rest the indicia exposed opposite the play indicator is "Kick 25 yards return 12". Twenty-five yards from the 44-yard line is the 19-yard line and the return of 12 yards by the safety man puts the ball in the "Home team's" possession on the 31-yard line.

Playing piece 208 is then restored to the groove 206 with the line 210 on the 31-yard line while the 10-yard marker extends from the 31-yard line to the 41-yard line. It is now first down on the 31-yard line which is in zone 2. The "Home team" quarterback calls the signals for a reverse by setting the play indicator 24 opposite the play "reverse" in the area 242 indicating zone 2 on the casing 4 of the playing mechanism. After operating the playing mechanism the indicia exposed is "Loss of 2 yards" making it second down on the 29-yard line with 12 yards to go. A cross buck is now selected by placing the play indicator 24 opposite this play, which results in "No gain". The next play called is a reverse, which results in another loss of 2 yards, putting the ball in play on the 27-yard line, fourth down, and 14 yards to go. The punt results in the ball going "Out of bounds on the 50-yard line", after which the playing piece 208 is taken to the other side of the field and faced in the opposite direction, play being continued in the same manner as above indicated until the timing mechanism actuates the bell striker 126 and sounds the bell 148 to indicate the end of a quarter, at which time, the teams are reversed and go toward opposite goals. At the same time that the gong or bell 148 is sounded cross-member 156 has contacted the arm 152 of the quarter indicator 154 and moved it a quarter revolution to expose through the opening above, the indicia "Second".

Play is continued after the reversal of fields through the second quarter and then the second half is played in a manner similar to the first.

When a team scores points by touchdown, safety, field goal, point after touchdown, or the like, these scores are recorded on the scoring mechanism 180.

Since zone 4 is that closest to goal, there is provided on the playing mechanism among the indicia of 246 an additional area, or an extra play which is designated "Field goal", so that a team, when within 25 yards of the goal line may use this play if desired.

As suggested above the indicia on the cylindrical member 10 is preferably based upon statistics from actual college games and from these

statistics it has been found that the success of different plays vary with the zone where the scrimmage is taking place. To exemplify this there is set forth in the table below the comparative indicia for a "pass" in the several zones:

Zone 1	Zone 2	Zone 3	Zone 4
Incomplete	Intercepted on opponent's 46, return 2 yards	Incomplete	Penalty, passer not 5 yards behind line of scrimmage
Intercepted on own 40, return 7 yards	Penalty, defense offside	Penalty, intentionally grounding pass, offense	Complete, gain 1 yard
Incomplete	Incomplete	Complete, gain 8 yards	Complete, gain 10 yards
Intercepted, returned for touchdown	Incomplete	Complete, 17 yard gain on forward lateral	Incomplete
Incomplete	Gain 5 yards	Incomplete	Incomplete
Incomplete	Gain 17 yards	Complete, touchdown	Incomplete
Penalty, interference with pass receiver on 38-yard line	Incomplete	Penalty, defense offside	Incomplete
Complete, gain 8 yards	Incomplete	Intercepted on 10, returned 20 yards	Complete touchdown
Complete, gain 25 yards	Intercepted on 50 yard line, returned 10 yards	Incomplete	Intercepted on goal line, returned to 18 yard line
Complete, gain 17 yards	Incomplete	Incomplete	Incomplete
Gain 38 yards on a forward double lateral	Incomplete	Intercepted on 24, returned 4 yards	Complete, gain 4 yards
Incomplete	Tackled for 8 yard loss	Complete, gain 2 yards	Incomplete
Incomplete	Incomplete	Complete, gain 3 yards	Complete, gain 3 yards
Intercepted on own 42, return 2 yards	Incomplete	Incomplete	Penalty, interference with pass receiver on 2 yard line
Incomplete	Gain 36 yards	Complete, gain 7 yards	Incomplete
Incomplete	Touchdown on flea flicker	Incomplete	Complete, gain 2 yards
Fumble bad pass from center, 9 yard loss	Incomplete	Complete, gain 4 yards	Incomplete
Incomplete	Complete, gain 9 yards	Incomplete	Incomplete

While all of the exact indicia may be in words on the cylindrical member 10 it is convenient and desirable to show certain types of results by figures, as, for example, when the point after touchdown is good this may be represented by the figure of a man with his hands raised upright above his head, or a penalty for off side may be shown by the figure of a man with his hands on his hips, these being the positions assumed by the referee to indicate to the players and spectators the character of the offense, or the result of the play. By using figures instead of words the player of the game is made familiar with these types of signals and, therefore, better able to understand them when they are used in a regulation football game. These figures, when used, should be interpreted by the directions and rules on the board 270, or by the directions printed on the sides of the casing 4.

It will thus be apparent that this invention comprises a game device simple in operation and readily understood by all players, which furnishes, as nearly as possible in an indoor game, all of the situations and results that obtain in a regulation game. The game device also provides education and amusement for the players.

While the invention has been more specifically described as applied to football, it will be apparent that the elements used and particularly the combination of a play selector with a playing mechanism and a playing field may, when other suitable indicia are employed, be used to simulate other types of games.

The invention has been described with reference to a preferred embodiment thereof, which is to be considered simply as illustrative of one of the preferred forms which the invention may take and not as a limitation of it. The invention should, therefore, be limited only in the light of the prior art and by the scope of the appended claims.

What I claim is:

1. In a game device a playing mechanism comprising a base, a cylindrical element having thereon a plurality of circumferential sets of individual indicia, a shaft extending axially from said cylindrical element, means for rotatably mounting said cylindrical element on said base, means for starting rotation of the cylindrical element and an indicator actuated in accordance with the number of actuations of the starting means and provided with indicia representing the progress of a playing period.

2. In a game device a playing mechanism comprising a base, a cylindrical element having thereon a plurality of circumferential sets of individual indicia, a shaft extending axially from said cylindrical element, means for rotatably mounting said cylindrical element on said base, a ratchet fixed to said shaft, a pawl, means for actuating said pawl and rotating said ratchet, and means operated by each actuation of said pawl to indicate the progress of a playing period.

3. In a game device a playing mechanism comprising a base, a cylindrical element having thereon a plurality of circumferential sets of individual indicia, a shaft extending axially from said cylindrical element, means for rotatably mounting said cylindrical element on said base, a ratchet fixed to said shaft, means for rotatably mounting a pawl on said shaft, a pawl engageable with said ratchet, means for rotating said pawl mounting, a pivoted lever movable through a small arc by said pawl mounting, a dog on said pivoted lever engaging a toothed wheel, an indicator and a toothed wheel attached thereto, said toothed wheel being rotated stepwise by the dog on the pivoted lever, and indicia on the indicator representing the progress of a playing period.

4. In a game device a playing mechanism comprising a base, a cylindrical element having thereon a plurality of circumferential sets of individual indicia, a shaft extending axially from said cylindrical element, means for rotatably mounting said cylindrical element on said base, means for starting rotation of the cylindrical element, an indicator movable stepwise by each actuation of the starting means and provided with indicia representing the progress of a playing period, and a second indicator actuated by said first indicator.

5. In a game device a playing mechanism comprising a base, a cylindrical element having thereon a plurality of circumferential sets of individual indicia, a shaft extending axially from said cylindrical element, means for rotatably mounting said cylindrical element on said base, means for starting rotation of the cylindrical element, a rotatable circular indicator movable stepwise by each actuation of the starting means and provided with indicia representing the progress of a playing period, and a second indicator

actuated by said first indicator once for each complete revolution of said first indicator.

6. In a game device a playing mechanism comprising a base, a cylindrical element having thereon a plurality of circumferential sets of individual indicia, each circumferential set corresponding with a particular play and the individual indicia indicating the result thereof, means for rotatably mounting said cylindrical element on said base, means for starting rotation of said cylindrical element, an indicator for determining the individual indicia when rotation of the cylindrical element has ceased, an indicator graduated in minutes to play actuated step by step for each actuation of the starting means, and a second indicator actuated by said first indicator graduated in periods played.

7. In a game device wherein a surface provided with suitable indicia simulates a football playing field, the combination comprising a playing mechanism having a base, a rotatable cylindrical element mounted on said base having thereon a plurality of circumferential sets of individual indicia, each circumferential set of indicia corresponding to a particular football play and the individual indicia to the results of such play, a casing enclosing said cylindrical element provided with a longitudinal opening to expose a portion of the cylindrical element, indicia on said casing near the longitudinal opening corresponding to particular plays on the cylindrical element, a play indicator slidable along the longitudinal opening to designate a circumferential set of indicia and accordingly a particular play, means to set the cylindrical element rotating, means associated with said rotating means to stop the rotation of the cylindrical element when an individual indicia giving the result of the play is exposed through the longitudinal opening opposite the play indicator, and an indicator provided with indicia corresponding to minutes to play actuated by said means to set the cylindrical element rotating.

8. In a game device wherein a surface provided with suitable indicia simulates a football playing field, the combination comprising a playing mechanism having a base, a rotatable cylindrical element mounted on said base having thereon a plurality of circumferential sets of individual indicia, each circumferential set of indicia corresponding to a particular football play and the individual indicia to the results of such play, a casing enclosing said cylindrical element provided with a longitudinal opening to expose a portion of the cylindrical element, indicia on said casing near the longitudinal opening corresponding to particular plays on the cylindrical element, a play indicator slidable along the longitudinal opening to designate a circumferential set of indicia and accordingly a particular play, means to set the cylindrical element rotating, means associated with said rotating means to stop the rotation of the cylindrical element when an individual indicia giving the result of the play is exposed through the longitudinal opening opposite the play indicator, an indicator provided with indicia corresponding to minutes to play actuated by said means to set the cylindrical element rotating, and a second indicator actuated by said first indicator provided with indicia to designate periods.

EDWIN H. CRAIG.