United States Patent

[11] **3,571,985**

[72] Inventor **Clarence E. Hulbert, Jr.**
Houston, Tex.

[21] Appl. No. **797,293**
[22] Filed **Oct. 9, 1968**
Division of Ser. No. 498,962, Oct. 20, 1965, Pat. No. 3,477,178.
[45] Patented **Mar. 23, 1971**
[73] Assignee **Capvac Industries, Inc.**
Freeport, Tex.

[54] **CYLINDER TREATING METHOD**
1 Claim, 7 Drawing Figs.

[52] **U.S. Cl.** **51/319**
[51] **Int. Cl.** **B24c 1/00**
[50] **Field of Search** 51/319, 320, 321, 8, 11

[56] **References Cited**

UNITED STATES PATENTS

1,628,141	5/1927	Gray	134/168X
2,218,625	10/1940	Rudigier	134/167X
2,348,505	5/1944	Voerge	51/8
2,358,557	9/1944	Boyd et al.	51/8
2,455,514	12/1948	Mead	51/8

Primary Examiner—Lester M. Swingle
Attorneys—James A. Bargfrede, Murray Robinson, Ned L. Conley and Robert W. B. Dickerson

ABSTRACT: A method of cleaning the interior of a hollow cylindrical member in which support means are positioned within the cylindrical member, nozzles means are supported on the support means, an abrasive mixture is supplied through the nozzle means, and the nozzle means are rotated and moved longitudinally through the cylindrical member.

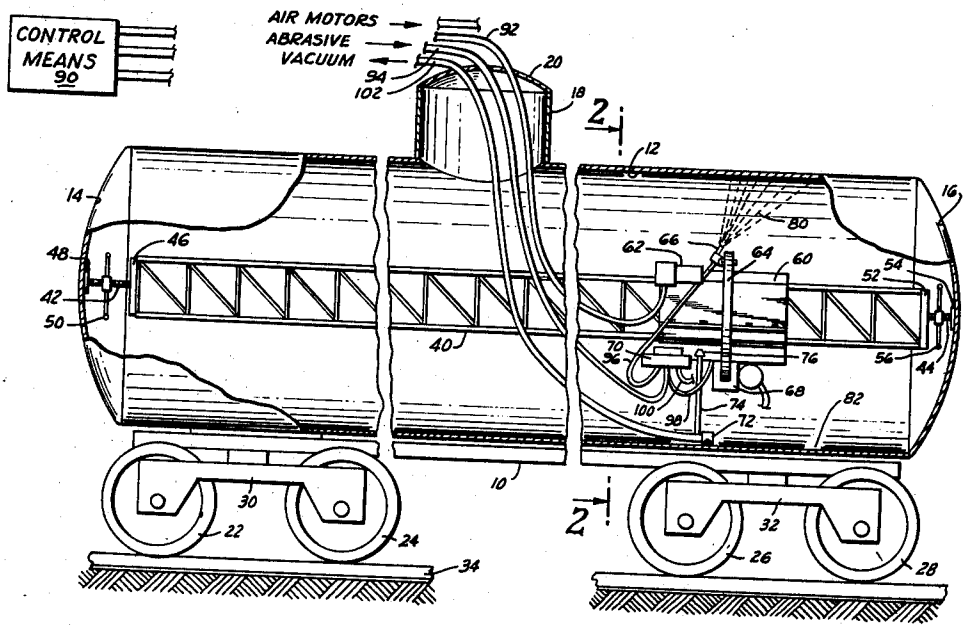

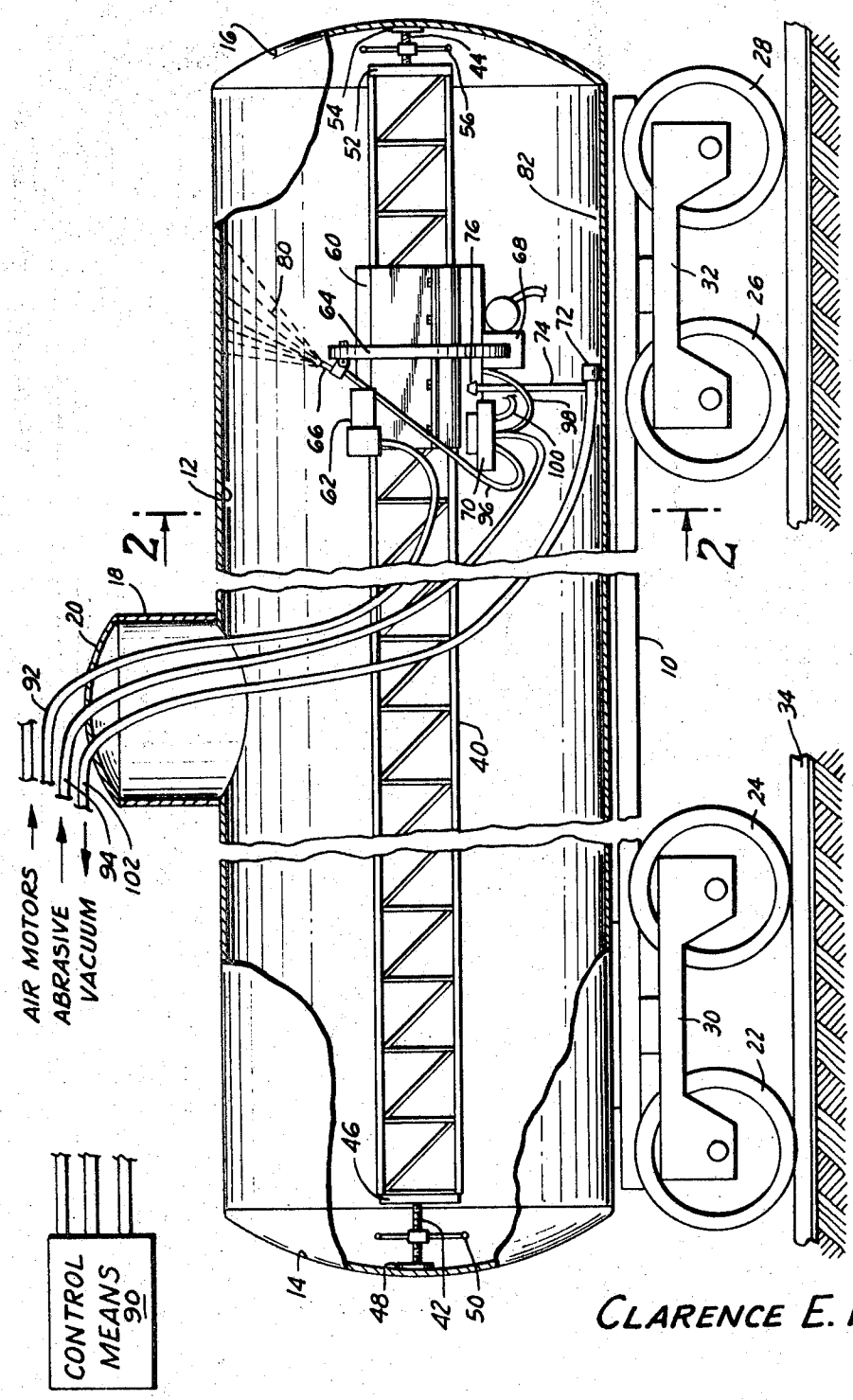

Fig. 1

CLARENCE E. HULBERT, JR.
INVENTOR.

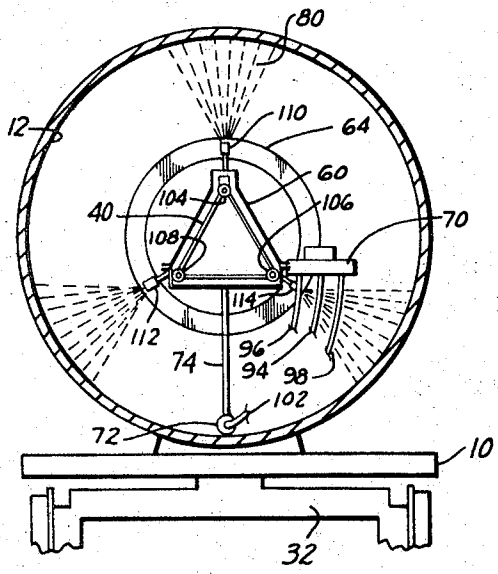

Fig. 2

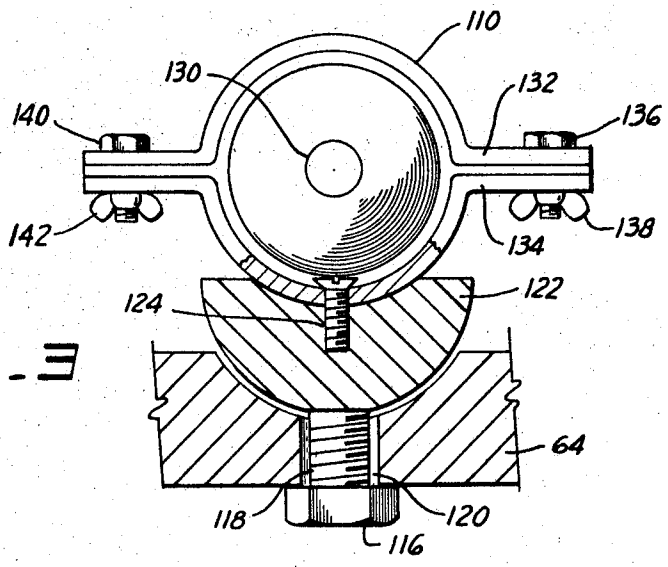

Fig. 3

CLARENCE E. HULBERT, JR.
INVENTOR.

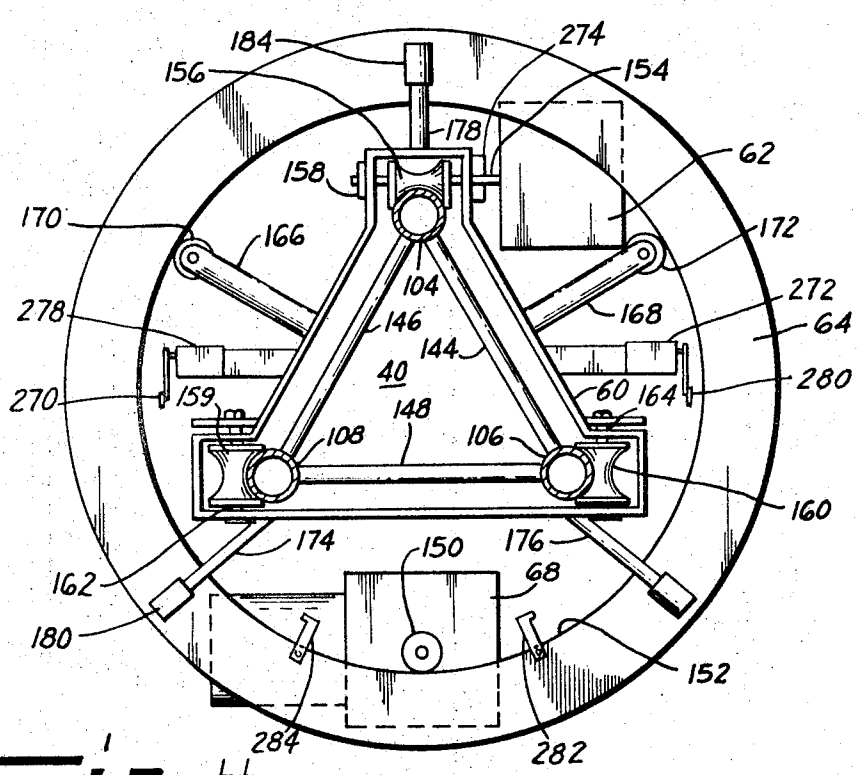

Fig. 4

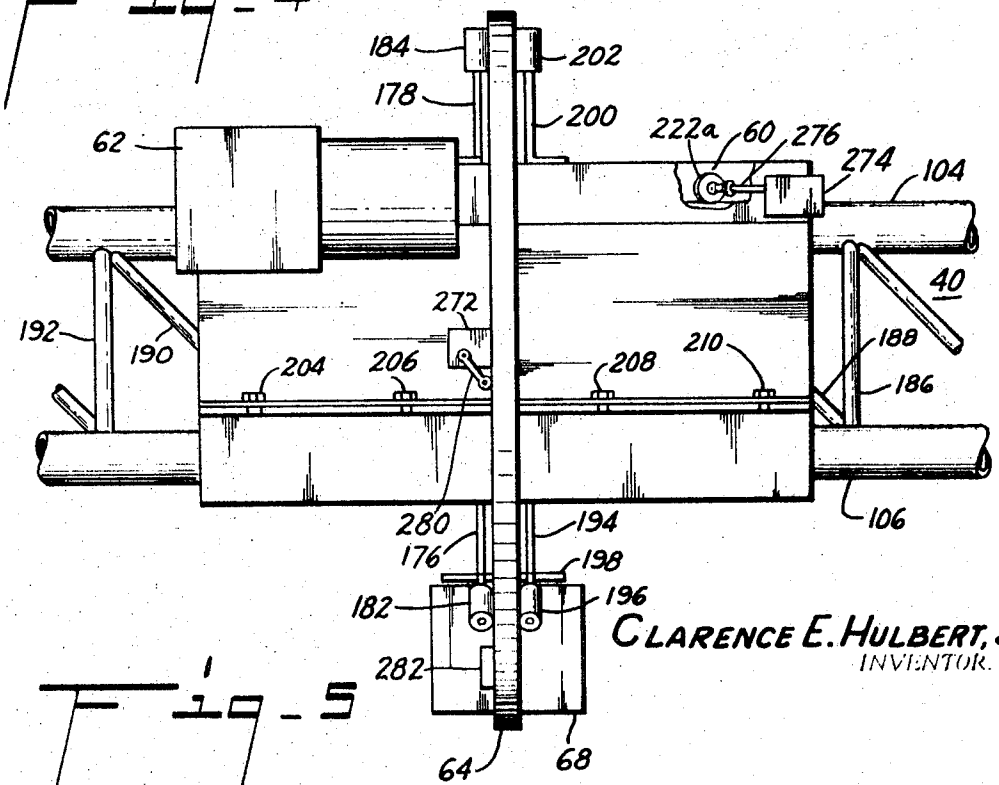

Fig. 5

CLARENCE E. HULBERT, JR.
INVENTOR.

Fig. 6

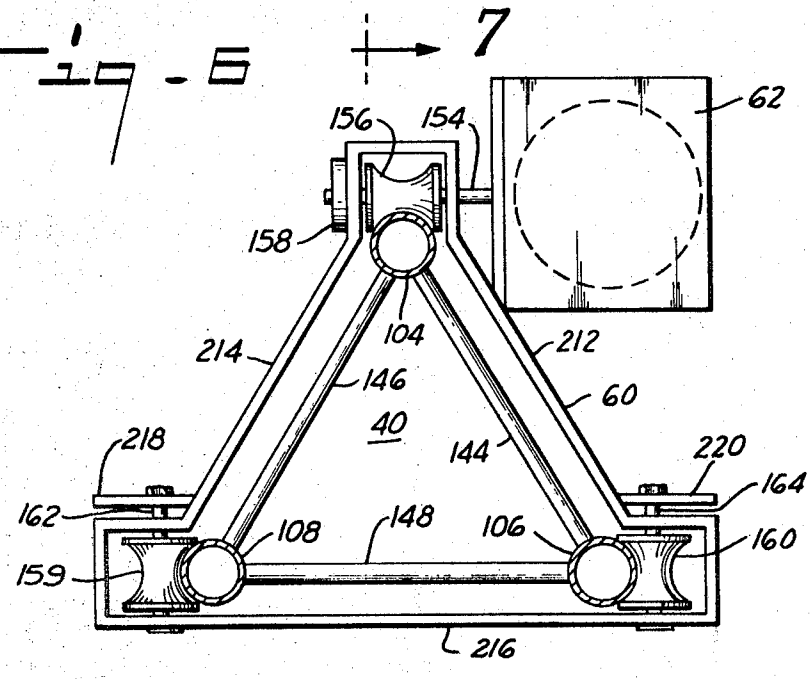

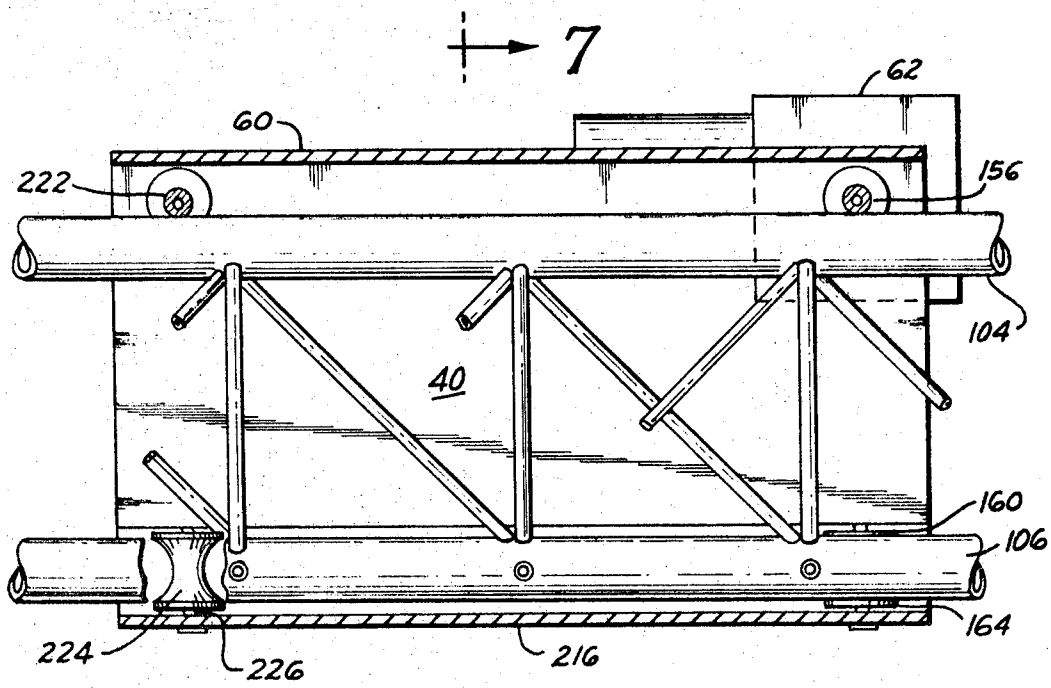

CLARENCE E. HULBERT, JR.
INVENTOR.

Fig. 7

CYLINDER TREATING METHOD

This application is a division of my application Ser. No. 498,962, filed on Oct. 20, 1965, now U.S. Pat. No. 3,477,178, dated Nov. 11, 1969.

This invention pertains generally to material treating methods and particularly to methods adapted for use in cleaning the interior of hollow elongated members such as railroad tank cars.

In my prior copending U.S. Pat. application, Ser. No. 463,781 filed Jun. 14, 1965, entitled "ABRASIVE FLOW SYSTEM AND METHODS," now abandoned, apparatus and methods were disclosed for cleaning storage tanks and other structures. However, such application did not disclose apparatus and methods for effective, safe, and economical cleaning and finishing the interior of elongated hollow members, such as railroad tank cars.

Railroad tank cars utilized in the storage and transportation of petrochemicals, pharmaceutical products, milk, brewery products, and other fluids have presented unique problems in the effective and efficient cleaning thereof. For example, when chemicals are stored and transported by such railroad tank cars it is often necessary to "burnout" the interior of such tank cars by leaving such tank cars in a smoldering condition for a period of several days and possibly several weeks. This burning out method of cleaning the interior of railroad tank cars puts such cars out of service for several days and the resultant smoke and odor from the tank cars is offensive and sometimes dangerous. Also, when railroad tank cars which have carried gasoline or other flammable products are cleaned in a known manner, the hazards to men working inside of such railroad tank cars are great inasmuch as deadly fumes are present and working conditions are very hazardous and uncomfortable. Working conditions with known methods of hand operated cleaning nozzles, are very uncomfortable to workmen due to the extremely heavy dust contamination which poses many problems of inadequate visibility for the workmen to see and perform their work of surface preparation properly. Heavy saturated dust requires many safety devices such as life lines and air-fed helmets to minimize health hazards to the operators. Inadequate visibility increases the amount of time required for the area to be cleaned by many hours over the same size area where visibility is unlimited.

Railroad tank cars must be cleaned of all mill scale and contamination prior to going into service to transport commodities. The cleaning requires abrasive cleaning methods because such tank cars must be lined with various chemical resistant coatings for the various commodities to be transported. All linings require the tank car to be abrasive cleaned prior to the installation of suitable lining. Thus, it is an object of the present invention to provide methods for treating the interior surface of a hollow, elongated member.

Another object of the present invention is to provide methods for removal of the residual debris which accumulates during abrasive cleaning of interior surfaces thereby removing hazardous dust conditions.

Another object of the present invention is to provide methods for safely, effectively, and economically cleaning the interior surfaces of hollow elongated members such as railroad tank cars.

A still further object of the present invention is to provide improved methods for cleaning and treating the interior surface of an elongated hollow member such as a railroad tank car.

A still further object of the present invention is to provide methods for effectively and rapidly cleaning the interior surface of a hollow elongated member without having personnel in such elongated hollow member during such cleaning.

In the drawings:

FIG. 1 is a cross-sectional, elevational view of the apparatus of the present invention positioned in a typical railroad tank car;

FIG. 2 is a sectional, end view of the apparatus of the present invention taken along line 2–2 of FIG. 1;

FIG. 3 is an end view partially in section of a nozzle and support of the present invention;

FIG. 4 is an end view, partially in section of the support means and carriage means of the present invention;

FIG. 5 is a side view of the support means and carriage means shown in FIG. 4;

FIG. 6 is a partial sectional, end view of the support means and the carriage means of the present invention; and

FIG. 7 is a side view of the support means and carriage means of the present invention taken along line 7–7 of FIG. 6.

Briefly stated, the present invention provides methods for treating the interior surface of an elongated hollow member. The apparatus of the present invention includes support means positioned generally along the longitudinal axis of such hollow member. Carriage means including drive means and ring means are positioned on the support means. Coupled to the carriage means are nozzle means including indexing means for rotational positioning of the ring means relative to the support means. Abrasive or other material is supplied to the nozzle means and selected rotational and axial movement of the nozzle means and carriage means is provided. As the nozzle means is rotationally indexed by the indexing means, material is discharged from the nozzles of the nozzle means in an arcuate pattern in which an arc of rotational movement of the nozzle means may be 120° if three nozzles are used. After the rotational movement of the nozzle means occurs, the drive means of the carriage means may be actuated to move the carriage means and the nozzle means along the support means to a new axial position to allow the previous step of rotational movement of the nozzle means to be repeated. The procedure continues so that a method of treating the interior surface of the hollow elongated member is provided. If cleaning of the interior surface of the elongated hollow member is desired, a uniform anchor pattern may be provided on the interior surface so that such surface is, in effect, the product of a cleaning process. While the rotational movement of the nozzles means occurs, and the drive means is being actuated to move the nozzle means along the support means, a vacuum suction means may be employed along the bottom section of the hollow elongated member to pick up all contaminants and debris removed from the interior surface so that there is no buildup of debris in the bottom of the hollow, elongated member. Deep residual material collected would absorb the impact of the abrasive thus preventing proper cleaning of the lower section of the hollow, elongated member. Another suction means may be attached to the nozzle means with brush means so that the entire surface of the hollow elongated member may be properly cleaned.

Referring now to the drawings in detail, FIG. 1 is a cross-sectional, elevational view of the apparatus of the present invention positioned in a typical railroad tank car. Tank car **10** includes a hollow elongated member having an interior surface **12** with ends **14** and **16** closing the substantially cylindrical portion. Ends **14** and **16** may be suitably joined to cylindrical portion of the tank thereby providing a vessel capable of carrying bulk products such as food, petrochemicals, or any other material adapted to be transported by railroad tank car. A short stack **18** extends upwardly from the top portion of the railroad tank car **10** and allows material to be fed into the tank car or removed from the tank car. The top **20** of the stack **18** may be hinged or suitably coupled to stack **18** so that pressure may be maintained in tank car **10** if desired, and to provide proper sealing of the interior of the tank car **10**. Wheels **22**, **24**, **26**, and **28** coupled to axle assemblies **30** and **32** support the tank car **10** on track **34** and another track not shown in FIG. 1. The tank car **10** shown in FIG. 1 may be of any known type widely used throughout the railroad industry. Although the present invention is adapted for particular use with railroad tank cars, it will be appreciated in the later explanation and description of the invention that the apparatus and methods of the present invention may be utilized effectively with any vessel wherein abrasive cleaning or treatment of the interior surface of such vessel is required. Although in the following description and explanation of the invention abrasive cleaning such as sand blasting will be explained in detail, it will be appreciated that the present invention also may be utilized

in painting, spraying, or other treating of the interior surface of any vessel.

Disposed substantially along the longitudinal axis of the tank car **10** is support means **40**. Support means **40** includes braces positioned as a three-way truss with sections of the support means being easily added or removed according to the requirements of a particular job. The ends of the guide rail assembly of the support means are provided with adjustable jack screws **42** and **44**. Jack screw **42** may include member **46** positioned against the end of the truss and member **48** may be positioned against end **14** of the tank car **10**. Handle **50** may be utilized for rigidly positioning the guide rail in place in a manner well known in the art. Jack screw **44** may include member **52** positioned against the truss and member **54** may be positioned against end **16** with handle **56** providing tightening of the jack screw to assure that support means **40** remains fixed rigidly inside the railroad tank car **10**.

Positioned on the support means **40** is carriage means **60**. Carriage means **60** includes drive means **62** and ring means **64**. Nozzle means **66** includes indexing means **68** which provides rotational positioning of the ring means **64** as will be explained in detail subsequently. The nozzle means further includes a distributor head means **70** similar to the distributor head means identified in my previously mentioned copending application Ser. No. 463,781 filed Jun. 14, 1965 entitled "ABRASIVE FLOW SYSTEM AND METHODS." A vacuum suction means **72** includes member **74** coupled by suitable means such as welding at **76** to the carriage means **60**.

Generally as may be ascertained from examination of FIG. **1**, material is sprayed or discharged in pattern **80** from a nozzle positioned on ring means **64** against the interior surface **12** of the tank car **10**. In describing one operation of the apparatus of the present invention the ring means **64** and the nozzle means **66** are positioned at a selected location along support means **40** and rotational movement of the ring means **64** and nozzle means **66** occurs to clean the interior surface **12** of the tank car **10**. As the entire circumference of the particular segment of interior surface **12** has been cleaned or otherwise treated with pattern **80**, the carriage means **60** is moved longitudinally along support means **40** to another position and the pattern **80** may again be applied against the interior **12** of tank car **10** to allow cleaning or treatment of another section of the tank car **10**. It will be appreciated that as material such as abrasive used in cleaning the interior of tank car **10** is accumulated at the bottom or lower portion **82** of tank car **10**, the vacuum suction means **72** will draw the accumulated material from the bottom of the tank car.

Control of the apparatus positioned in tank car **10** may be achieved outside of the tank car with control means **90** operable by a single operator who may be simultaneously operating a plurality of similar devices in a plurality of tank cars. The control means **90** may be similar generally to the control means identified in my prior copending patent application and such control means may control the air supply through line **92** to the air motors utilized in the present invention as part of the drive means and part of the indexing means to be described in more detail subsequently. Abrasive or other material is provided through line **94** which is coupled to distributor head means **70** which in turn is coupled to lines **96**, **98**, and **100** and to the individual nozzles positioned on ring means **64** as will be explained. The control means **90** further may control the vacuum on line **102** coupled to the vacuum suction means **72**. If abrasive material is used for cleaning the interior of the tank car, a vacuum is provided continuously to the vacuum suction means **72** to allow removal continuously of material collected at **82** in the lower portion of tank car **10**. Briefly summarizing the supply lines for controlling the apparatus positioned in tank car **10**, line **92** supplies pressurized fluid such as compressed air to the drive means and indexing means, line **94** provides material such as abrasive material to the distributor head means **70**, and line **102** provides a vacuum for withdrawing abrasive material which accumulates in the lower part of tank car **10** when abrasive cleaning is utilized.

Referring now to FIG. **2**, FIG. **2** is a sectional, end view of the apparatus of the present invention taken along line **2–2** of FIG. **1**. Tank car **10** is positioned on axle assembly **32** with an interior surface **12** to be cleaned or treated. Support means **40** includes member **104**, **106**, and **108**. The carriage means **60** is positioned over a portion of the support means **40** with distributor head means **70** coupled by suitable means such as welding or bolting to the carriage means **60**. Vacuum suction means **72** is positioned on support **74** to carriage means **60**. Line **102**, as explained previously, is coupled to vacuum suction means **72**, and line **94** is coupled to the distributor head means **70**. Lines **96** and line **98** are coupled to two of the nozzles **110**, **112**, and **114** with the other line **100** shown in F FIG. **1** not being shown in FIG. **2**.

It will be appreciated that nozzles **110**, **112**, and **114** are positioned at 120 angular degrees along the ring means **64** so that as the ring means rotate, the amount of rotation does not have to be more than 120 angular degrees to allow the pattern **80** from nozzle **110** and similar patterns from nozzles **112** and **144** to be greater than 120 angular degrees to allow proper treating of the interior surface **12** of the tank car **10**. It will be appreciated that although three nozzles are shown positioned at 120 angular degrees from each other on the ring means **64** that any number of nozzles may be utilized so long as the entire surface **12** is properly treated by the pattern from each nozzle positioned on the ring means **64**. For example, if four nozzles are to be utilized, each nozzle would be placed 90 angular degrees from the other nozzle along the ring means **64** so that the rotational movement of ring means **64** would not need to be greater than 90 angular degrees to provide treating of the entire surface **12** of the tank car **10**.

FIG. **3** is an end view partially in section of a nozzle and support of the present invention. Ring means **64** has a bolt **116** having threads **118** positioned through opening **120** and coupled to holder **122**. A screw **124** may be utilized for positioning nozzle **110** to holder **122**. Nozzle **110** has an opening **130** through which abrasive material or other material may be discharged. Nozzle **110** may include sections **132** and **134** wherein a nut **136** and wing **138** are coupled on one side and nut **140** and wing **142** are coupled on the other side to allow the nozzle **110** to be suitably coupled to a line or hose which is supplying abrasive or other material to the nozzle **110**. It will be appreciated in viewing the nozzle of FIG. **3** that the angular position of the three nozzles with respect to the ring means **64** may be varied so that the discharge from a particular nozzle against the interior surface **12** is at a suitable angle, as best seen in viewing FIG. **1**, so that a uniform anchor pattern will be provided on interior surface **12** as explained in my prior copending application. The interior surface **12** is provided with a uniform anchor pattern thereby causing the interior surface **12** to be a product formed by the process or method utilized in the present invention. The uniform anchor pattern is one of the principal objectives of the process or method utilized in the present invention. The angular positioning of the nozzle on ring means **64** allows a variation in the area covered by pattern **80** shown in FIG. **1** and the corresponding patterns shown in FIG. **2** so that interior surface **12** may be treated with abrasive material either in a concentrated pattern in the event that the corrosion or material to be removed from the interior surface **12** is heavy, or the pattern may be diffused so that a large area is treated in those instances where interior surface **12** does not require extensive treatment. Thus, it will be apparent that by positioning the nozzles utilized in practicing the present invention various patterns may be obtained which patterns are adapted for a particular job without the necessity of making substantial changes or modifications to the apparatus of the present invention so that such apparatus has wide adaptability while maintaining its effectiveness and efficiency under many varied operating conditions.

FIG. **4** is an end view, partially in section of the support means and carriage means of the present invention. Support means **40** includes upper tubular member **104** and tubular members **108** and **106**. Members **104**, **106**, and **108** may be

coupled together by a plurality of braces **144**, **146**, and **148** to form a three-way truss as explained previously.

Thus, the tubular members **104**, **106**, and **108** and the support members **144**, **146**, and **148** and the jack screws not shown in FIG. 4 provide support means for the carriage means **60**. Carriage means **60** includes drive means **62** and ring means **64**. Indexing means **68** may be positioned in the lower part of the carriage means so that member **150** engages the inside portion **152** of the ring means **64** to allow the nozzles coupled to the ring means **64** to be suitably positioned. Indexing means **68** includes an air driven reversible motor. A friction drive or a geared pinion may be utilized. The indexing motor of indexing means **68** may be actuated by compressed air and is well known in the art. The motor, when reversed in rotation, causes member **150** to be reversed in rotation so that reverse movement of ring means **64** occurs. The motor of drive means **62** also is an air actuated reversible motor which may be reversed in rotation so that the drive shaft **154** may be rotated in either direction so that member **156** is rotated to cause the carriage means **60** to move in either direction along the support means.

Shaft **154** is coupled by a suitable connection **158** to the upper portion of carriage means **60** so that drive roller **156** of the drive means causes movement of the carriage means **60** along the support means **40**. Idler rollers **159** and **160** are positioned on pins **162** and **164** respectively to allow the carriage means **60** to move positively along tubular members **108** and **106** of the support means **40**.

Ring means **64** is disposed from support means **40** by members such as members **166** and **168** having for example rollers **170** and **172** coupled thereto. The ring means **64** is held in position longitudinally by members **174**, **176**, and **178** having rollers **180**, **182** and **184**. As may be seen in FIG. **5**, similar support members and rollers are positioned on the back side of ring means **64** and such support members and rollers are not visible in FIG. 4. The ring portion of the ring means may be segmented to allow easy positioning of the ring on the carriage means and on the support means.

In typical operation of the apparatus of the present invention, the carriage means **60** may be bolted in position or coupled in any other suitable manner along the support means **40**. After the carriage means **60** has moved to a new position along the support means **40**, the ring means **64** is again rotated by the indexing means **68** but in the opposite direction from the previous rotation until another limit switch again is actuated at the end of the **120** degree rotational movement. It will be appreciated by those skilled in the art that the particular combination of movements may be adjusted easily and quickly for various conditions and requirements so that rotational movement of the nozzle means may be accomplished simultaneously with the longitudinal movement of the carriage means along the support means.

FIG. **5** is a side view of the support means and carriage means shown in FIG. 4. Tubular member **104** may be seen to be coupled to tubular member **106** by braces such as braces **186**, **188**, **190**, and **192**. Carriage means **60** is shown positioned on support means **40** with indexing means **68** shown in the lower portion of FIG. **5**. Drive means **62** is shown in the upper part of FIG. **5**. Support **176** and idler roller **182** may be seen in the lower portion of FIG. **5** and similar support **194** and idler roller **196** are shown on the other side of the ring of the ring means **64**. Member **198** may be utilized as a brace for members **176** and **194** and to support the indexing motor. Support **178** and roller **184** are shown coupled to the carriage means **60** on one side of the ring of the ring means **64** while support **200** and roller **202** are positioned on the other side of the ring of the ring means **64**. Bolts **204**, **206**, **208**, and **210** are utilized for positioning the upper part of carriage **60** to the lower part of the carriage means when the carriage means is positioned on the support means in the vessel or tank as explained previously. It will be appreciated in viewing FIG. **5** that rotation of the ring means **64** to which the nozzles are coupled is achieved through rotation of the member **150** coupled to the motor of the indexing means **68**. The idler rollers such as rollers **184**, **202**, **196**, and **182** provide stability to the ring means **64** as rotation occurs.

FIG. **6** is a partial sectional, end view of the support means and the carriage means of the present invention. The air motor of drive means **62** is coupled through suitable gear reduction means to drive shaft **154** which is coupled to roller **156**. Support bearing **158** is provided for shaft **154** on carriage means **60**. As explained previously, tubular members **104**, **106**, and **108** of the support means **40** are coupled together by brace members **144**, **146**, and **148**. Idler rollers **159** and **160** are positioned on carriage means **60** by suitable means such as pins **162** and **164**.

The carriage means may be constructed of suitable material such as sheet aluminum or other material which is light in weight yet sturdy and may include plates **212**, **214**, and **216**. Plates **218** and **220** extend respectively from plates **214** and **212**. Plates **218** and **220** provide a floating, support effect to idler rollers such as rollers **159** and **160** so that movement of the carriage means along the support means may be achieved in a smoother manner and to allow enough friction for proper operation of the drive means **62**.

It will be understood and appreciated by those skilled in the art that although a drive means has been shown and described which utilizes a shaft and a friction drive wherein the weight of the carriage means provides friction on tubular member **104**, other drive means may be provided so long as the carriage means is moved along the support means in a selected, controlled manner. If the apparatus of the present invention is used in treating the inside of pipe, for example, the apparatus may remain fixed while the pipe is moved. The apparatus of the present invention may be used effectively in many ways so long as there is relative movement between the vessel or workpiece and the apparatus.

FIG. **7** is a side view of the support means and carriage means of the present invention taken along line **7–7** of FIG. **6**. The drive means **62** is shown coupled to roller **156** positioned on tubular member **104** of the support means **40**. Roller **222** is positioned on tubular member **104** and supported in a manner similar to the support provided for roller **156**. Idler roller **160** is coupled to tubular member **106**. Idler roller **224** is shown positioned in rolling contact with member **106**. Lower plate **216** is coupled to shaft or pin **164** and to pin **226**. As explained previously, drive means **62** provides friction drive through roller **156** on tubular member **104** to cause the carriage means **60** to move longitudinally along the support means **40**.

Thus, the present invention provides methods for treating the interior of an elongated member having an opening therein so that the interior surface of such member is provided with an anchor pattern which is uniform whenever the interior surface of such member is cleaner with cleaned with an abrasive such as sand. The methods of the present invention also may be utilized for painting or for applying other fluid material to the interior surface of tubular members including tanks or vessels. The present invention overcomes many of the obstacles and problems which have been encountered in the cleaning and treatment of interior surfaces by eliminating the need for workmen to be inside the tank or vessel during cleaning or treatment thereby minimizing the danger to workmen. The present invention also allows effective treatment to be made more rapidly than in the past thereby putting expensive equipment such as railroad tank cars back into service sooner.

Although a preferred embodiment of the invention has been shown and described, it will be apparent to those skilled in the art that many modifications and improvements may be made in performing the methods of the present invention without departing from the spirit of the invention as defined by the following claim. Although such claim may be presented in indented format to facilitate reading and understanding thereof, such indented format is not to be construed as functional limitation of the steps recited in such claim.

I claim:

1. A method of cleaning the interior surface of a hollow elongated member, comprising:

positioning support means within said member along its longitudinal axis;

positioning a plurality of nozzle means on said support means for rotation relative to said support means;

providing sand under pressure through said nozzle means to impinge on said interior surface; and

alternately moving said nozzle means longitudinally of said support means and rotating said nozzle means around said support means less than 360° while sand is being provided through the nozzle means.