Oct. 10, 1967 J. M. MILLER ETAL 3,346,125

TRAY

Filed Oct. 24, 1965

Fig. 1

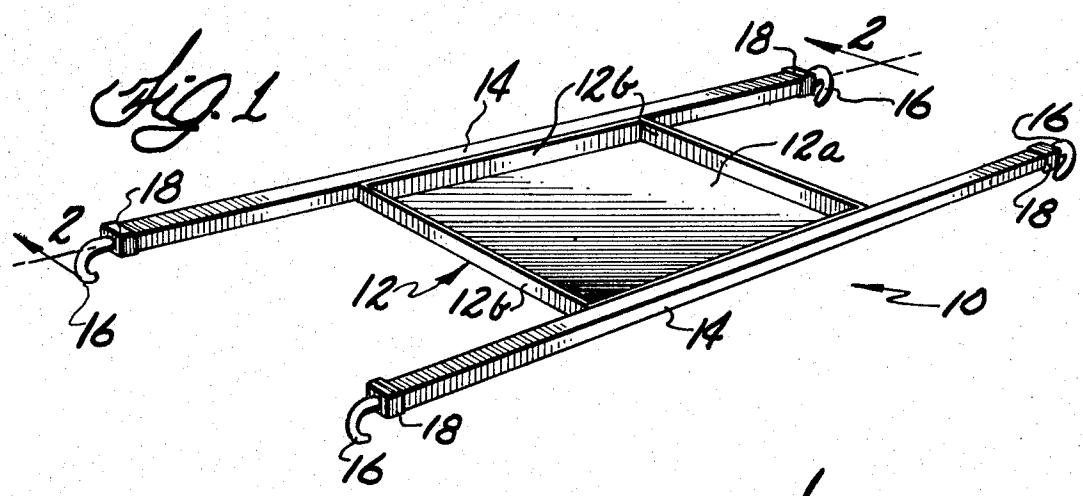

Fig. 2

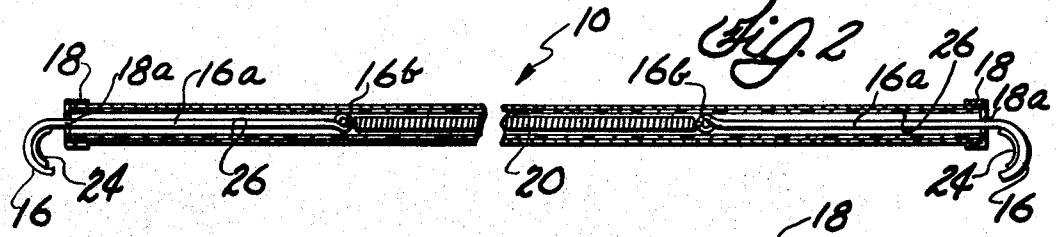

Fig. 3

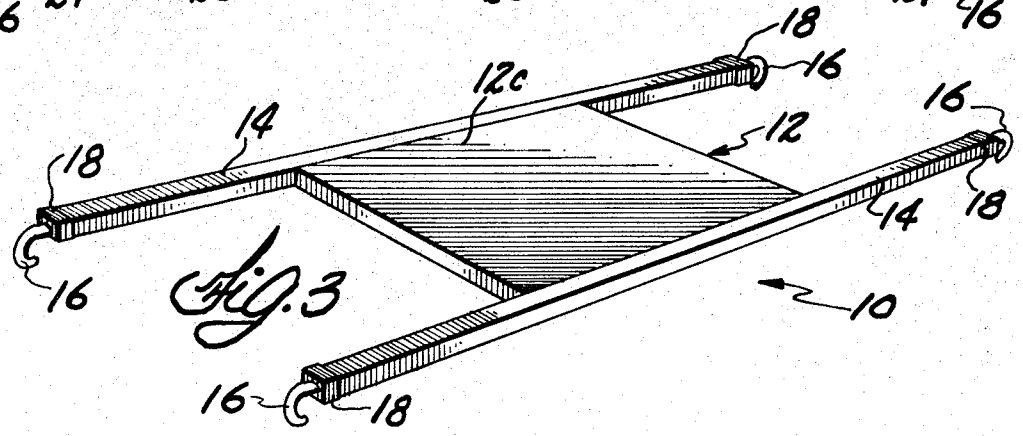

Fig. 4

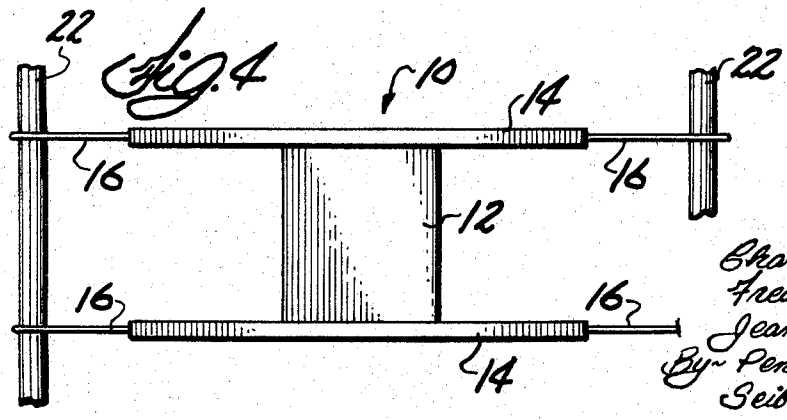

Inventors
Charles J. Bretors
Freddie Marcus
Jeanne M. Miller
By Pendleton, Neuman, Seibold & Williams
Attorneys

United States Patent Office 3,346,125 Patented Oct. 10, 1967

3,346,125

TRAY

Jeanne M. Miller, Chicago, Freddie Marcus, Niles, and Charles J. Cretors, Highland Park, Ill., assignors to C. Cretors & Company, Chicago, Ill., a corporation of Illinois

Filed Oct. 24, 1965, Ser. No. 504,666
1 Claim. (Cl. 211—126)

The present invention relates generally to a new and improved tray and more specifically, to a tray adapted to be mounted between a pair of spaced rails or the like. While not so limited in its use, the tray constructed in accordance with the teachings of the present invention finds particular advantageous utilization as a hospital bed tray.

Various bed trays are presently available for use in hospitals. However, such bed trays are not readily adaptable for utilization in conjunction with hospital beds having side rails which are provided to prevent the occupant of the bed from falling out of the bed. Moreover, such hospital bed trays are not readily adaptable for use by patients in hospital wards, wherein such beds with side rails are commonly utilized. Consequently, it has been desirable to provide a bed tray adapted to be mounted between a pair of spaced rails, such as the side rails of a hospital bed, and adapted for utilization by a patient.

A primary object of the present invention is to provide a new and improved tray. More specifically, an object is to provide a new and improved tray adapted to be mounted between a pair of spaced rails or the like. A related object is to provide a new and improved hospital bed tray adapted for mounting between the side rails of a bed.

A further object of the present invention is to provide a new and improved tray for mounting between the side rails of a hospital bed which is particularly adapted for use by a patient. In this latter connection, it is an object to provide such a tray which is adapted to be linked to the side rails of a bed to prevent inadvertent spilling or removal of the tray.

An additional object of the present invention is to provide a new and improved reversible tray. An allied object is to provide a reversible tray having one surface which is substantially flat, so that it may be utilized for writing letters or the like, and having a second surface with raised edges, so that it may be utilized for supporting food trays or the like.

A general object of the present invention is to provide a new and improved tray characterized in its simplicity, economy and ease of mounting. Another general object is to provide a new and improved reversible tray characterized in its simplicity, economy and ease of mounting.

Other objects and advantages of the present invention will become apparent upon reading the attached detailed description taken in conjunction with the drawing.

In one form of the invention, a tray is provided which is adapted to be mounted between a pair of spaced rails or the like. The tray includes a main body portion and has means extending outwardly of the main body portion, on opposite sides thereof, which are adapted to link the main body portion between the rails. Additionally, means are provided for resiliently connecting together the linking means on opposite sides of the main body portion through the main body portion so that the linking means may be moved outwardly away from the main body portion against the force of the resilient means into linking relationship with the rails and so that the linking means

are urged inwardly toward the main body portion into secure linking relationship with the rails. The main body portion of the tray may be in the form of a rectangular parallelepiped having one open face so that a reversible tray is provided having a first surface which is flat and having a second surface which has raised or upstanding edges.

For the purpose of providing a detailed description, of the tray constructed in accordance with the teachings of the present invention, reference will now be made to the drawing wherein:

FIG. 1 is a perspective view of a reversible tray constructed in accordance with the teachings of the present invention;

FIG. 2 is a sectional view taken substantially along line 2—2 in FIG. 1;

FIG. 3 is a perspective view of the tray shown in FIG. 1 in its reversed condition; and

FIG. 4 is a top elevational view illustrating the tray of FIGS. 1–3 in linking relationship with a pair of spaced rails.

Referring now to the drawing, a reversible tray **10** constructed in accordance with the teachings of the present invention is shown which is adapted to be mounted between a pair of spaced rails or the like. The tray **10** includes a main body portion **12** which is suitably mounted, such as by welding, between a pair of extended support members or brackets **14** so that portions of the support members extend outwardly of the main body portion on opposite sides thereof. In other words, the support members **14** function to provide outwardly extending supporting arms or legs for the main body portion **12**.

In the exemplary arrangement, the main body portion **12** is in the form of a rectangular parallelepiped having one open face. Consequently, when the tray **10** is mounted in the position shown in FIG. 1, the main body portion **12** provides a surface **12***a* having upstanding or raised edges **12***b*. More specifically, the main body portion **12** defines an open top rectangular box, when mounted in this position. On the other hand, when the tray **10** is mounted in the position shown in FIG. 3, i.e., when the tray is reversed, the main body portion defines a substantially flat surface **12***c*. It will be readily apparent that the main body portion **12** may take any desired form and the exemplary main body portion **12** is merely illustrative of one form thereof.

While in the exemplary arrangement, the support members **14** and the main body portion **12** are formed separately, it will be apparent that they may be integrally formed as a composite main body portion. Additionally, it will be apparent that the main body portion **12** may be formed to extend the length of the support members **14**, rather than only extending a portion of the length thereof, as shown in the exemplary arrangement.

In keeping with the present invention, means are provided which extend outwardly of the support members **14** and are adapted to link the support members and the main body portion **12** to spaced rails, such as the side rails of a hospital bed. In the exemplary arrangement, hook members **16** are provided for this purpose. As may be seen by reference to FIG. 2, the support members **14** are in the form of hollow members having rectangular cross sections, and the hook members **16** have straight body portions **16***a* which extend within the hollow portions of the support members. Cap members **18** are provided for capping the ends of the support members **14**. The cap members **18** are provided with apertures which accommodate the main body portions **16***a* of the hook

members **16**, and the caps prevent the withdrawal of the hooks **16** from the support members **14**, due to the provision of eyelets **16***b* at the ends of the main body portions **16***a* of the hook members.

In further keeping with the present invention, resilient means, associated with the support members, are provided for allowing the hook members **16** to be moved outwardly away from the support members against the force of the resilient means and for urging the hook members inwardly toward the support members. More specifically, in the exemplary arrangement, resilient means are provided for connecting together the hook members **16**, provided at opposite ends of the support members **14**, through the support members so that the hook members may be moved outwardly against the force of the resilient means into hooking or linking relationship with selected spaced rails. The resilient means thereafter urges the hook members **16** toward the support members **14** so that the hook members are maintained in secure linking relationship with the rails. In the exemplary arrangement a spring member **20** is connected between the eyelets **16***b* of the hook members **16** provided at opposite ends of a support member **14**. Thus, it will be apparent that a hook member **16** may readily be pulled outwardly away from the associated support member **14** against the force of the associated spring member **20** and, upon release thereof, the spring member **20** functions to urge the hook members **16** back toward the positions shown in FIG. 2.

In the mounting of the tray **10** between a pair of spaced rails **22** (see FIG. 4), such as the side rails of a hospital bed, the hook members **16** are pulled outwardly away from the associated support members **14** and are hooked or linked around the rails **22**. When the hook members **16** are thereafter released, the springs **20** within the support members **14** function to draw the hook members inwardly into secure hooking or linking relationship with the rails **22** so that the tray is securely mounted between the rails. To thereafter remove the tray **10**, the hook members **16** are pulled outwardly away from the rails **22**, against the force of the spring member **20**, until the hook members are free of the rails.

Thus, a new and improved tray has been provided which may be readily mounted between a pair of spaced rails, such as the side rails of a hospital bed. Additionally, it will be apparent that the tray **10** may readily be reversed. When the tray is mounted between the rails **22** in the position shown in FIG. 1, the hook members **16** hang downwardly as shown in FIG. 1 since the hook members **16** and the spring members **20** are freely rotatable within the support members **14**. Consequently, the hook members engage the tops of the rails **22** and hook downwardly around the rails. If the tray **10** is mounted between the rails in the reversed position shown in FIG. 3, the hook members **16** again hang downwardly so that the tops of the rails **22** are engaged by the hooks and the hooks extend downwardly therearound. Consequently, the disclosed tray **10** may be mounted in the position shown in FIG. 3 to provide a flat surface suitable for writing letters or the like. Alternatively, the tray may be reverse mounted, as shown in FIG. 1, to provide an open top box-like arrangement suitable for the receipt of food trays or the like. In this latter position, the upstanding sides or edges **12***b* will prevent the food tray or the like from being readily and inadvertently pushed or knocked off the tray **10**.

Due to the utilization of the hook members **16** for linking or hooking the tray **10** to the rails **22**, the tray may not be inadvertently removed or knocked over. This is true since the hook members **16** extend around the rails. Consequently, the hook members **16** must be pulled outwardly away from the support members **14** and thus away from the rails **22**, against the force of the spring members **20**, to remove the tray **10**. For the purpose of preventing the tray **10** from being readily slid along the rails **22** and thus for preventing the spilling of objects positioned on the tray **10**, the hook members **16** may be provided with rubber gripping pads **24** (FIG. 2) or the like for engaging the rails.

Finally, for the purpose of preventing the hooks **16** and the springs **20** from rattling within the support members **14**, the support members may be provided with non-metallic tube liners **26** formed of a material such as plastic (see FIG. 2).

In view of the foregoing, it will be apparent that a new and improved tray has been provided which is particularly suited for use in hospitals and hospital wards.

What is claimed is:

In a reversible tray adapted to be mounted between a pair of spaced rails or the like, the combination which comprises a pair of extended support members disposed in spaced relationship, a main body portion mounted on the support members, the main body portion being in the form of a rectangular parallelepiped having one open face which defines a flat surface when the tray is mounted in one position and defines a surface with raised edges when the tray is mounted in the reverse position, means extending outwardly of the ends of the support members and adapted to link the support members and the main body portion to the rails, and means for resiliently connecting together linking means on opposite ends of the support members through the support members so that the linking means may be moved outwardly away from the support members against the force of the resilient means into linking relationship with the rails and so that the linking means are urged inwardly toward the support members.

References Cited

UNITED STATES PATENTS

1,351,919	9/1920	Levi	211—105.6
1,555,038	9/1925	Thweatt	108—149
1,732,520	10/1929	Leatherman	108—149
2,006,169	6/1935	Jones	4—1
2,956,849	10/1960	Dow	108—14
3,088,421	5/1963	Ferris	108—13

CHANCELLOR E. HARRIS, *Primary Examiner.*

W. D. LOULAN, *Assistant Examiner.*