J. D. FORTUNE.

DRAWING MACHINE.

APPLICATION FILED DEC. 3, 1914.

1,149,120.

Patented Aug. 3, 1915.

3 SHEETS—SHEET 1.

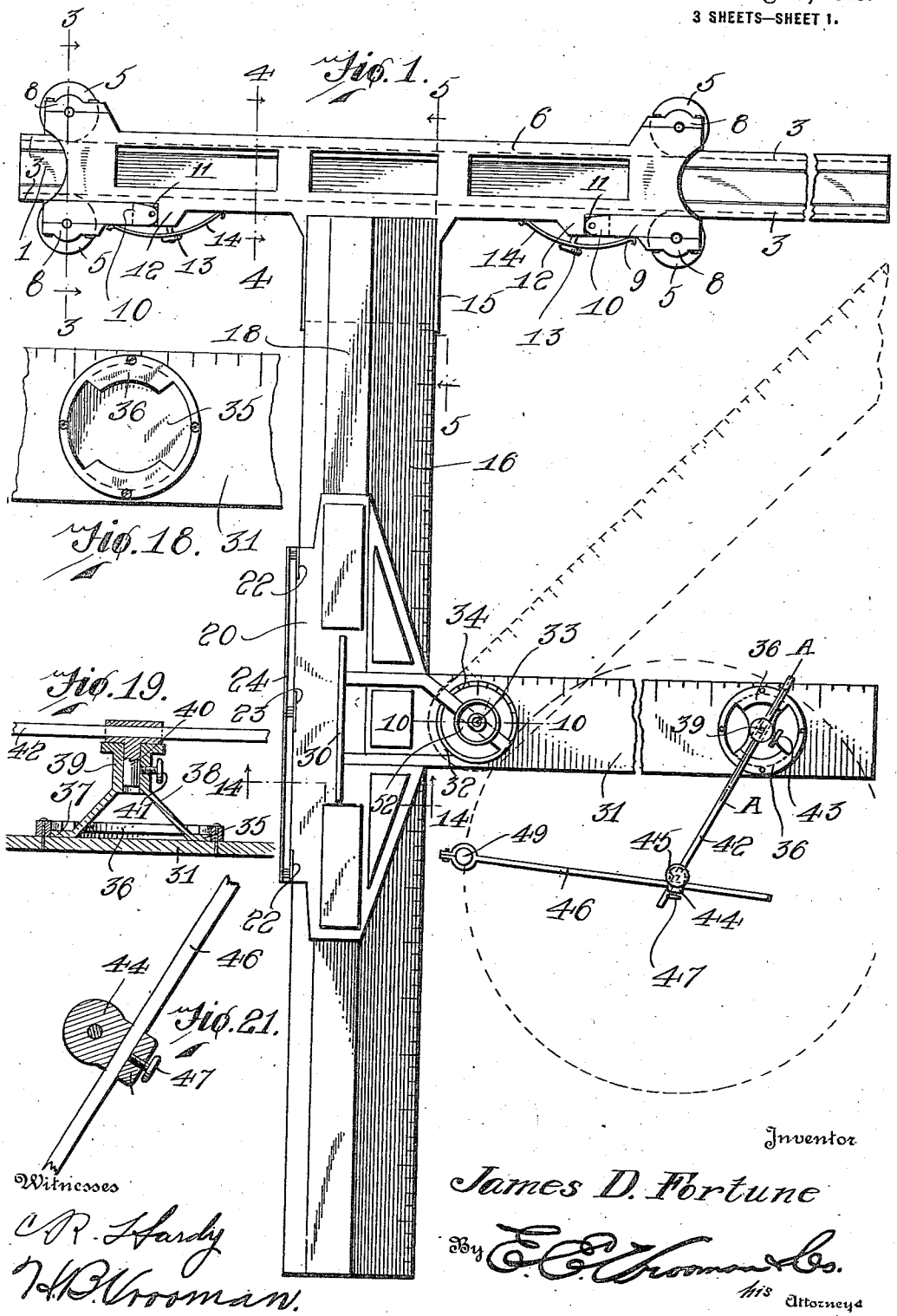

Witnesses

P. Hardy

H. B. Crooman.

Inventor

James D. Fortune

By E. E. Crooman & Co.

His Attorneys

J. D. FORTUNE.

DRAWING MACHINE.

APPLICATION FILED DEC. 3, 1914.

1,149,120.

Patented Aug. 3, 1915.

3 SHEETS—SHEET 2.

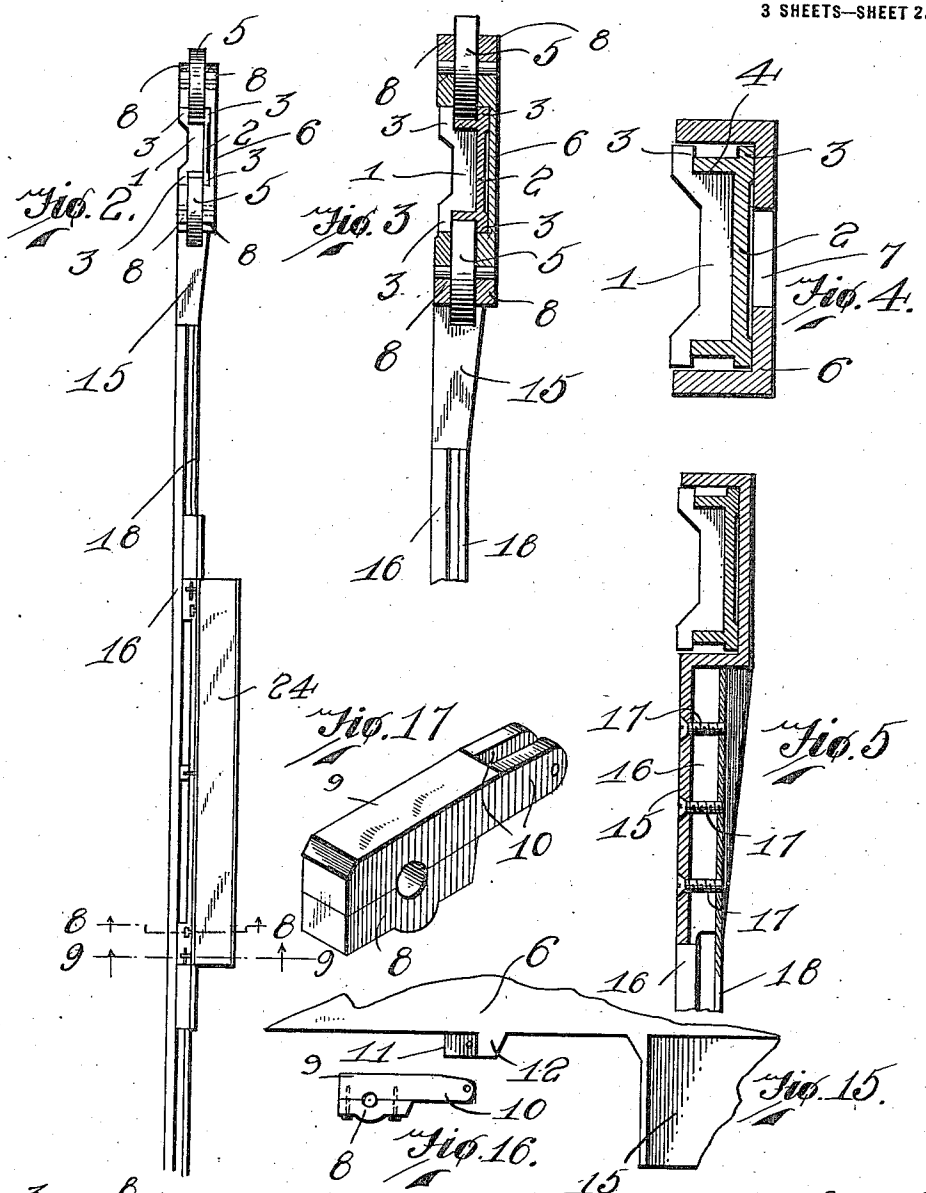

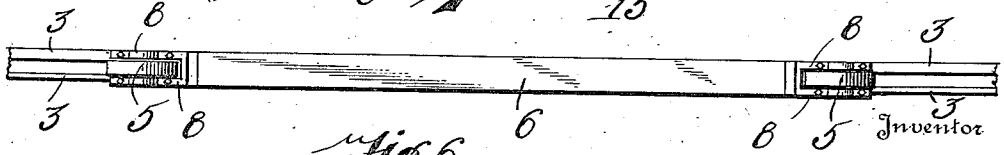

Witnesses

C. R. Hardy

H. B. Crooman.

Inventor

James D. Fortune

By E. E. Crooman & Co.

Attorneys

J. D. FORTUNE.

DRAWING MACHINE.

APPLICATION FILED DEC. 3, 1914.

1,149,120.

Patented Aug. 3, 1915.

3 SHEETS—SHEET 3.

Fig. 13.

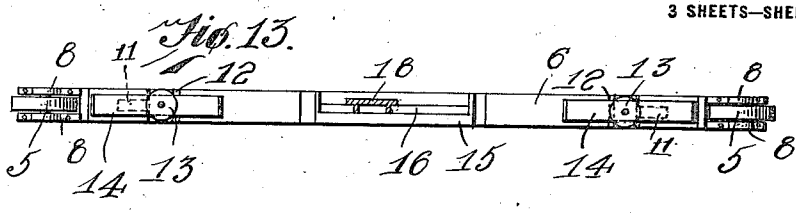

Fig. 7.

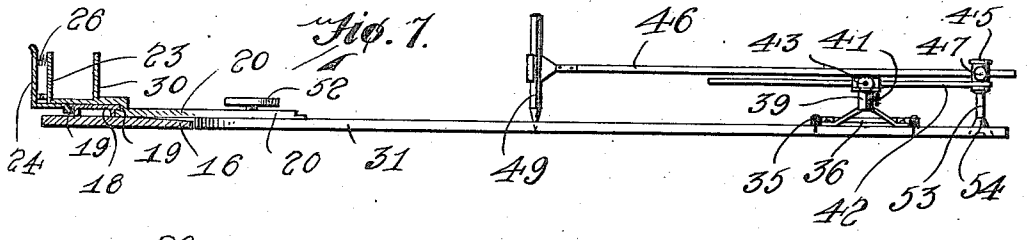

Fig. 8.

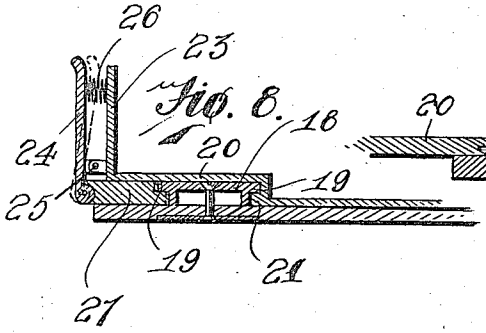

Fig. 10.

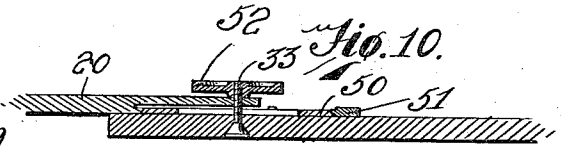

Fig. 20

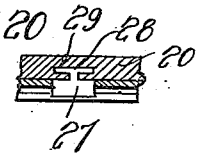

Fig. 11.

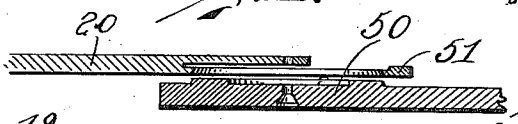

Fig. 9.

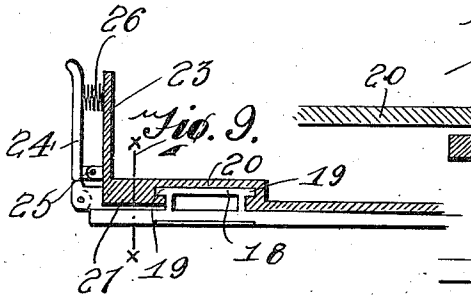

Fig. 12

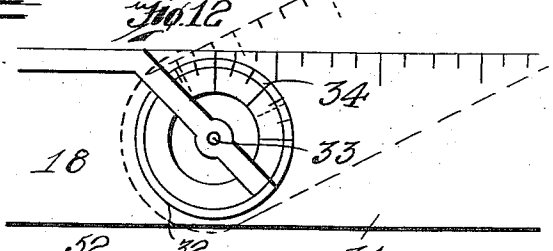

Fig. 14

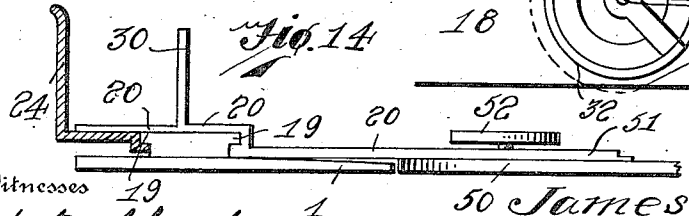

Witnesses

C. P. Hardy

H. B. Crooman.

Inventor

James D. Fortune

By E. E. Crooman & Co.

His Attorneys

UNITED STATES PATENT OFFICE.

JAMES D. FORTUNE, OF LA JOLLA, CALIFORNIA.

DRAWING-MACHINE.

1,149,120. Specification of Letters Patent. Patented Aug. 3, 1915.

Application filed December 3, 1914. Serial No. 875,341.

To all whom it may concern:

Be it known that I, JAMES D. FORTUNE, a citizen of the United States of America, residing at La Jolla, in the county of San Diego and State of California, have invented certain new and useful Improvements in Drawing-Machines, of which the following is a specification, reference being had therein to the accompanying drawing.

This invention relates to drafting tools or a drawing apparatus and has for its object the production of a simple and efficient device which may be conveniently moved from place to place for the purpose of drawing diagrams and the like.

Another object of this invention is the production of a simple and efficient drawing apparatus which is so constructed as to permit the several adjustments of the different parts wherein the device may be especially used in connection with a blackboard or other device upon which a drawing is to be made.

With these and other objects in view this invention consists of certain novel conbinations, constructions, and arrangements of parts as will be hereinafter fully described and claimed.

In the accompanying drawings:—Figure 1 is a front elevation of the tool or apparatus. Fig. 2 is an edge view thereof. Fig. 3 is a section taken on line 3—3, of Fig. 1. Fig. 4 is a section taken on line 4—4, of Fig. 1. Fig. 5 is a section taken on line 5—5, of Fig. 1. Fig. 6 is a top plan view of the device illustrated in Fig. 1. Fig. 7 is a transverse sectional view through the depending blade and T square head showing the manner of attaching the T square head to the depending blade. Fig. 8 is a section taken on line 8—8, of Fig. 2. Fig. 9 is a section taken on line 9—9, of Fig. 2. Fig. 10 is an enlarged sectional view taken on line 10—10, of Fig. 1. Fig. 11 is a sectional view similar to Fig. 10 showing the pivot connection removed between the protractor blade and the T square head. Fig. 12 is an enlarged top plan view of the connection between the pivoted blade and the T square head. Fig. 13 is a bottom plan view of the carriage illustrated in Fig. 1. Fig. 14 is an enlarged sectional view taken on line 14—14, of Fig. 1. Fig. 15 is a fragmentary view of the lower portion of the hanger carriage. Fig. 16 is a side elevation of one of the lower wheel supporting bearings. Fig. 17 is a perspective view of the construction illustrated in Fig. 16. Fig. 18 is an enlarged top plan view of the socket adapted to engage the compass supporting mechanism. Fig. 19 is a section taken on line A—A of Fig. 1. Fig. 20 is a section taken on line X—X of Fig. 9. Fig. 21 is a transverse sectional view through the compass rod supporting clamp showing the manner in which the compass rod is attached thereto.

By referring to the drawings it will be seen that a track is employed upon which the present device is supported upon a wall or other suitable support or mechanism. It will be seen that the track comprises an inner channel portion 1 and an outer channel portion 2 having flanges 3 formed upon their respective side edges as clearly illustrated in Figs. 3 and 4. It will, therefore, be seen that a track portion 4 is formed upon the top and lower edges of the track upon which the wheels 5 are adapted to travel for supporting the carriage upon the track. It should be understood that the track may be secured to a wall or other suitable support by means of screws or other suitable securing devices. A carriage 6 is adapted to travel upon the track and is supported by means of the wheels 5, this carriage 6 being substantially U-shaped in cross section so as to overhang the upper and lower edges of the track. The carriage is provided with a plurality of cut out portions 7 for the purpose of making the hanger frame of a light construction. The wheels 5 are supported in suitable journals 8 as illustrated in Fig. 1.

The lower wheels 5 are supported upon journals 8 similar to the upper wheels 5, but the lower journals 8 are carried by the pivotally mounted supporting blocks 9, which blocks have their bifurcated ends 10 fitting over the tongues 11 formed upon the depending lugs 12 of the carriage frame 6. A thumb screw 13 is carried by each of the lugs 12 and engages a spring 14, which spring has its respective ends engaging the under face of the carriage 6 and the under face of the blocks 9 for normally holding the lower wheels 5 in engagement with the lower face of the supporting track. It should be understood that by tightening the thumb screws 13, the tension of the springs 14 may be increased to firmly hold the carriage upon the track which supports the same.

The carriage 6 is centrally provided with a depending channel portion 15 within which channel portion is fitted the depending hanger blade 16 as is illustrated in Figs. 1 and 5. This blade 16 is held in engagement with the channel portion 15 by means of the machine screws 17 as illustrated in Fig. 5. The hanger blade 16 is provided with a rib portion 18 extending longitudinally thereof, which rib portion is provided with laterally extending flanges 19 as is clearly illustrated in Fig. 8.

A T square head 20 is slidably mounted upon the hanger blade 16 and this T square head 20 is provided with an inwardly extending rib 21 for fitting under one of the flanges 19 formed upon the rib 18 as is illustrated in Fig. 8. The head 20 is provided with a plurality of upwardly extending end flanges 22 and a centrally upwardly extending flange 23. The trigger plate 24 is pivotally mounted upon the central flange portion 23 by means of the pivot connection 25 illustrated clearly in Fig. 9, and coil springs 26 are interposed between the end flanges 22 and the respective ends of the trigger plate 24 for normally urging an outward pressure upon the upper ends of the trigger plate 24.

A plurality of transversely movable locking bars 27 are slidably mounted upon the head 20, and these locking bars 27 are provided with T square upper portions 28 which work in the T-square upper notches 29 formed in the head 20 for constituting an efficient means for holding the blocks 27 in firm engagement with the head 20 and at the same time allowing a free movement thereof relative to the head 20. The inner end of the blocks 27 are so formed as to snugly fit around the flange portions 19 of the rib 18 and it will be seen that the coil springs 26 will normally urge the blocks 27 inwardly so as to cause the same to firmly grip the rib 18 and hold the head 20 in a set position upon the rib 18 and upon the depending blade 16. The head 20 is provided with a centrally located upwardly extending rib 30 which will constitute an efficient finger grip to facilitate the operation of the trigger plate 24.

A blade 31 is pivotally secured to the projecting tongue portion 32 of the head 20 by means of a pin 33, and this blade 31 is provided with an arc scale 34 adjacent the pivot pin 33 to allow for the change of angle of the blade 31 relative to the head 20. The blade 31 is graduated as is usual, as is also the blade 16, for the purpose of securing the desired measurements.

A socket plate 35 is carried by the blade 31 and this socket plate is provided with a plurality of segmental inwardly extending flanges 36 as illustrated in Fig. 18, under which flanges are adapted to fit the projecting feet 37 of the compass supporting frame 38. This supporting frame 38 is provided with a socket 39 in which the supporting head 40 fits and is held in engagement therewith by means of a thumb screw 41. A supporting arm 42 is secured to the head 40 by means of a thumb screw 43 as is illustrated in Fig. 1.

An adjustable clamp 44 is carried by the supporting arm 42 and is firmly held in engagement therewith by means of a thumb screw 45. An arm 46 is adjustably held in engagement with the clamp 44 by means of a thumb screw 47, and a crayon or other suitable marking device is carried by the outer end of the arm 46 as is clearly illustrated in Fig. 1.

As is illustrated in Fig. 10 the blade 31 is provided with an upwardly extending rib portion 50 over which fits the apertured end 51 of the head 20. A nut 52 is carried by the screw or bolt 33 so as to facilitate the connection of the head 20 to the blade 31.

It should be understood that the adjustable clamp 44 is supported upon a pivot standard 53 having a compass shaft supporting end 54 for constituting a pivot for the compass arm 46 as illustrated in Fig. 7.

From the foregoing description it will be seen that the present device may be readily used for the purpose of making a drawing upon a blackboard or sheet carried upon the side of the wall or the like, and that the vertical or perpendicular lines may be drawn by using the depending blade 16, and that the carriage 6 may be readily moved to any desired position upon the track which supports the same. It should be understood that this track may be formed in sections for the purpose of allowing the carriage to be accommodated to different length boards or sheets. It should be further understood that the head 20 may be readily moved or adjusted to a desired position upon the blade 16 by releasing the trigger plate 24 out of engagement with the rib portion 18 of the blade 16.

Having thus described the invention what is claimed as new, is:—

1. A device of the class described comprising a blade, a rib formed upon said blade, a head slidably mounted upon said rib, means for holding said head against displacement from said rib, a trigger plate pivotally secured to said head, springs engaging said trigger plate and head for urging an outward pressure upon the upper end of said trigger plate, slidably mounted clamp blocks carried by said head and engaging said trigger plate and adapted to be moved transversely of said head as said trigger plate is compressed upon said head for locking said head upon said blade, and a blade carried by said head.

2. A device of the class described comprising a blade, a rib formed upon said

blade, a head slidably mounted upon said rib, means for holding said head against displacement from said rib, a trigger plate pivotally secured to said head, springs engaging said trigger plate and head for urging an outward pressure upon the upper end of said trigger plate, slidably mounted clamp blocks carried by said head and engaging said trigger plate and adapted to be moved transversely of said head as said trigger plate is compressed upon said head for locking said head upon said blade, a blade carried by said head, and a finger piece carried by said head and spaced from said trigger plate for facilitating the operation of said trigger plate relative to said first mentioned blade.

In testimony whereof I hereunto affix my signature in presence of two witnesses.

JAMES D. FORTUNE.

Witnesses:
L. H. MANVILLE,
Mrs. L. H. MANVILLE.