US00D873723S

(12) United States Design Patent

Borkholder

(10) Patent No.: US D873,723 S
(45) Date of Patent: ** Jan. 28, 2020

(54) **FIFTH WHEEL TORSION KINGPIN**

(71) Applicant: **Carl J. Borkholder**, Bremen, IN (US)
(72) Inventor: **Carl J. Borkholder**, Bremen, IN (US)

(**) Term: **15 Years**
(21) Appl. No.: **29/641,595**
(22) Filed: **Mar. 23, 2018**
(51) **LOC (12) Cl.** **12-16**
(52) **U.S. Cl.**
USPC **D12/162**
(58) **Field of Classification Search**
USPC D12/400, 415, 162, 174–177, 179, 180, D12/181, 190–192, 196, 218
CPC .. B60T 17/00; B60D 1/01; B60D 1/14; B60R 25/02105; B60R 2011/001
See application file for complete search history.

(56) **References Cited**

U.S. PATENT DOCUMENTS

D629,338	S	*	12/2010	Ceccarelli	D12/162
D773,345	S	*	12/2016	Borkholder	D12/162
D838,630	S	*	1/2019	Borkholder	D12/162
D841,526	S	*	2/2019	Siegel	D12/162
D847,698	S	*	5/2019	Moore	D12/162
D856,199	S	*	8/2019	Siegel	D12/162
2013/0020784	A1	*	1/2013	Weipert	B60D 1/07 280/490.1
2017/0087947	A1	*	3/2017	Moore	B60D 1/583
2019/0030969	A1	*	1/2019	Borkholder	B60D 1/248
2019/0031255	A1	*	1/2019	Borkholder	B62D 53/061
2019/0225038	A1	*	7/2019	Borkholder	B60D 1/06

OTHER PUBLICATIONS

"Executive Fifth-Wheel King Pin Box (Torsion-Flex)" [online]. genyhitch.com. [Retrieved on Sep. 24, 2019]. Retrieved from the Internet: <https://genyhitch.com/product/executive-fifth-wheel-king-pin-box-torsion-flex>.*

"Executive Fifth-Wheel Gooseneck Conversion (Torsion-Flex)" [online]. genyhitch.com. [Retrieved on Sep. 24, 2019]. Retrieved from the Internet: <https://genyhitch.com/product/executive-fifth-wheel-gooseneck-conversion-torsion-flex>.*

* cited by examiner

Primary Examiner — Khawaja Anwar
Assistant Examiner — Mojtaba Tehrani
(74) *Attorney, Agent, or Firm* — Botkin & Hall, LLP

(57) **CLAIM**

The ornamental design for a fifth wheel torsion kingpin, as shown and described.

DESCRIPTION

FIG. **1** is a top isometric view of the fifth wheel torsion kingpin;
FIG. **2** is a bottom isometric view of the fifth wheel torsion kingpin of FIG. **1**;
FIG. **3** is a left side view of the fifth wheel torsion kingpin of FIG. **1**;
FIG. **4** is a right side view of the fifth wheel torsion kingpin of FIG. **1**;
FIG. **5** is a front view of the fifth wheel torsion kingpin of FIG. **1**;
FIG. **6** is a back view of the fifth wheel torsion kingpin of FIG. **1**;
FIG. **7** is a top view of the fifth wheel torsion kingpin of FIG. **1**; and,
FIG. **8** is a bottom view of the fifth wheel torsion kingpin of FIG. **1**.
The features shown in broken lines depict environmental structure of the fifth wheel torsion kingpin and form no part of the claimed design.

1 Claim, 7 Drawing Sheets

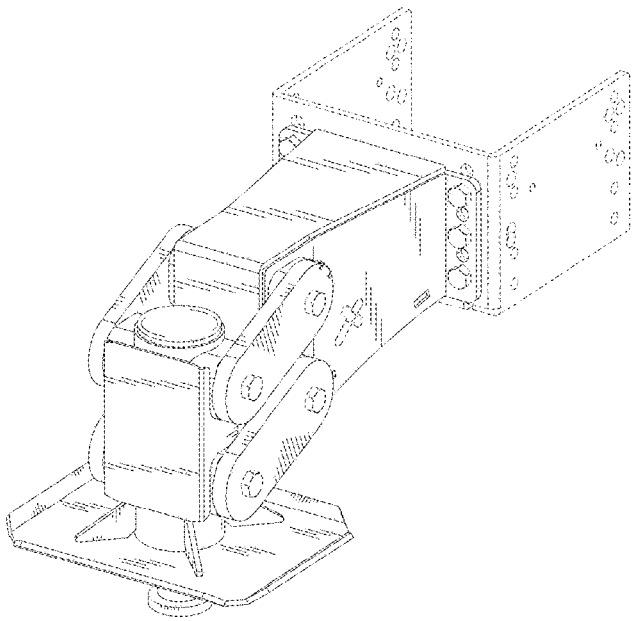

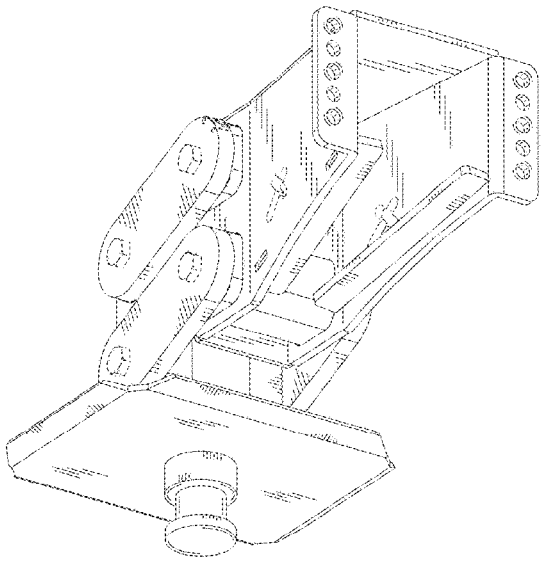

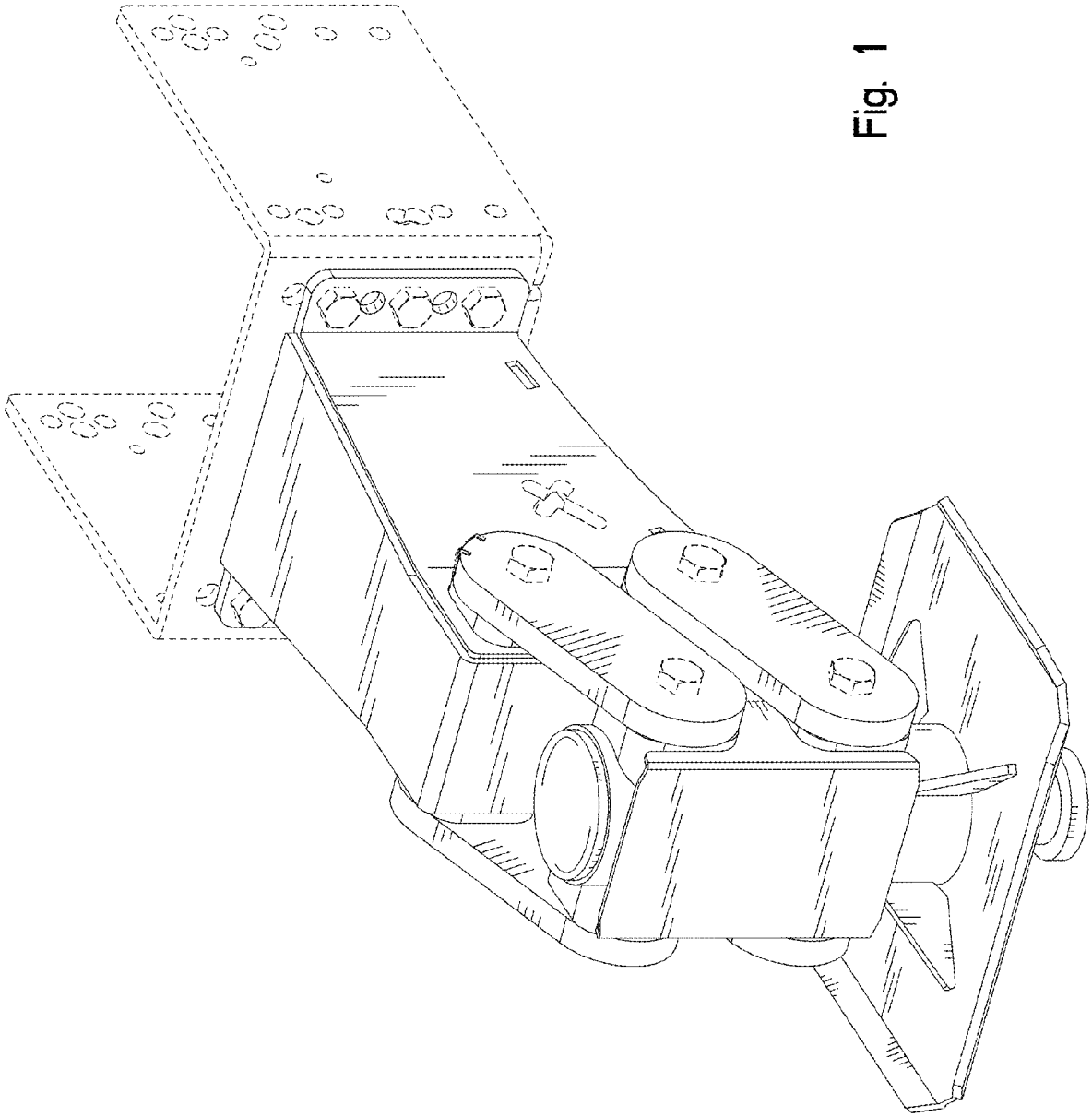

Fig. 1

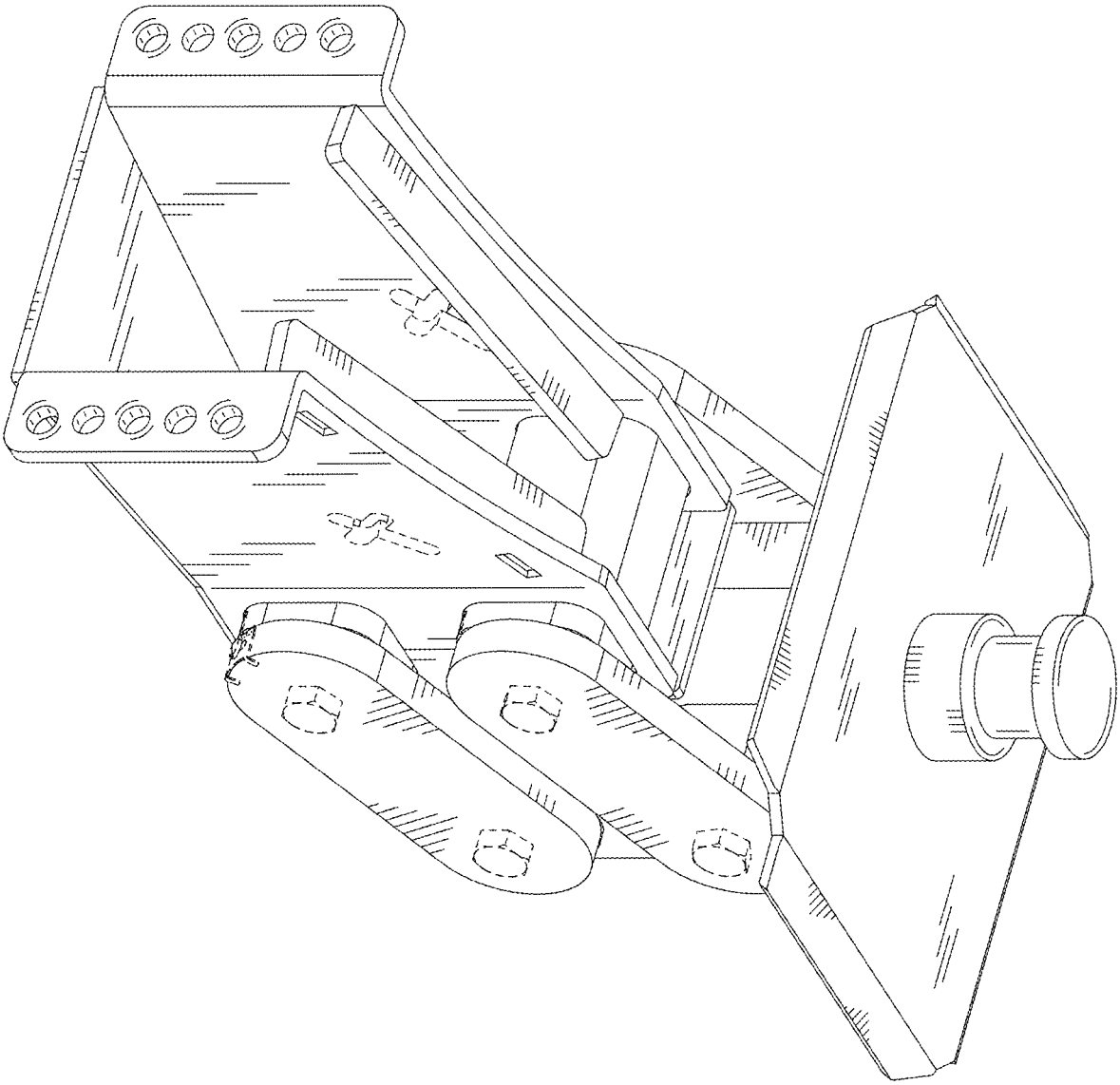

Fig. 2

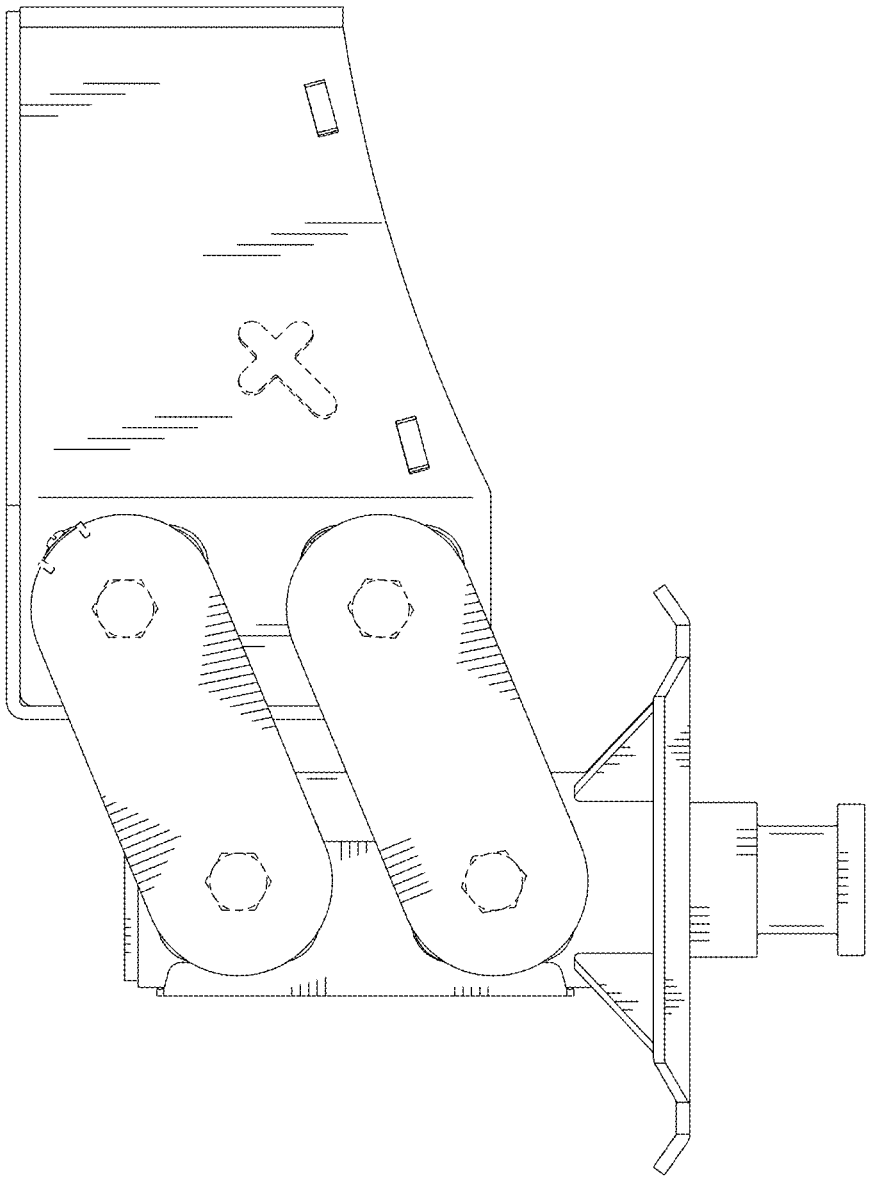

Fig. 3

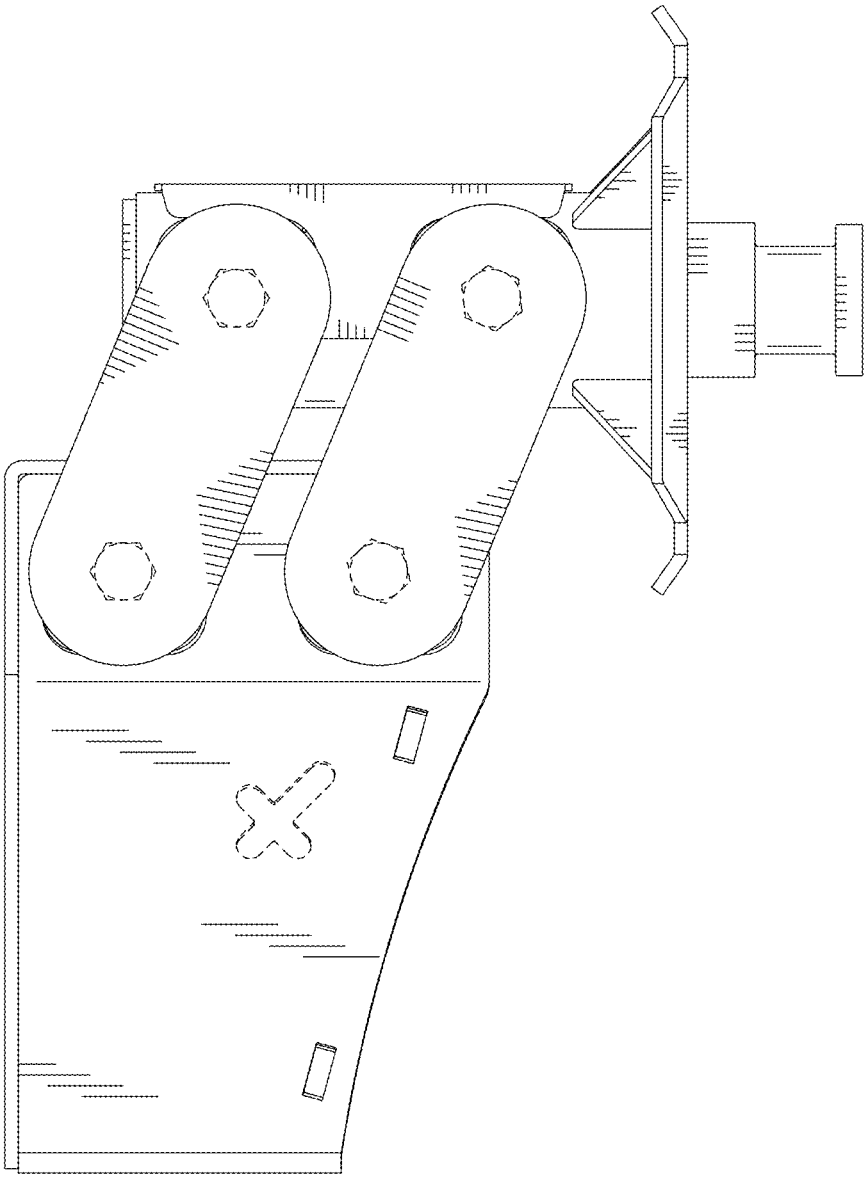

Fig. 4

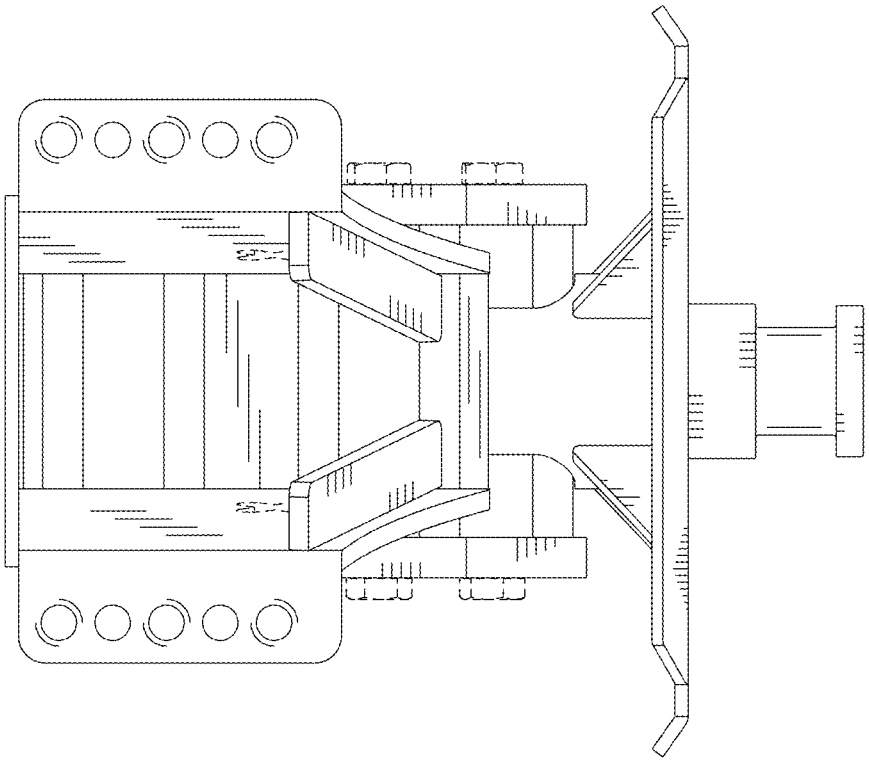

Fig. 6

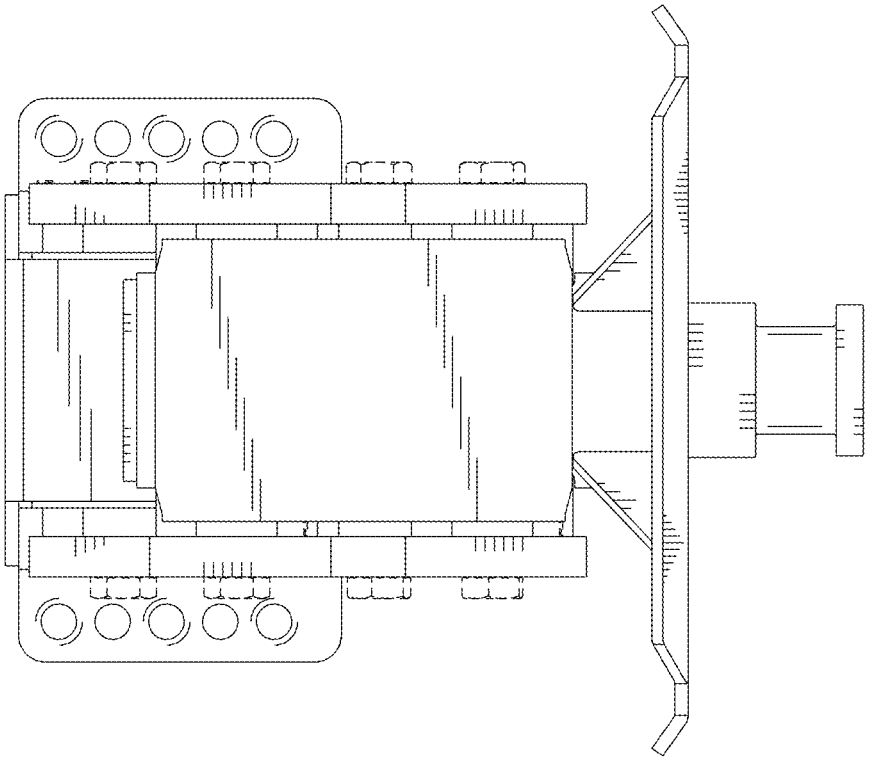

Fig. 5

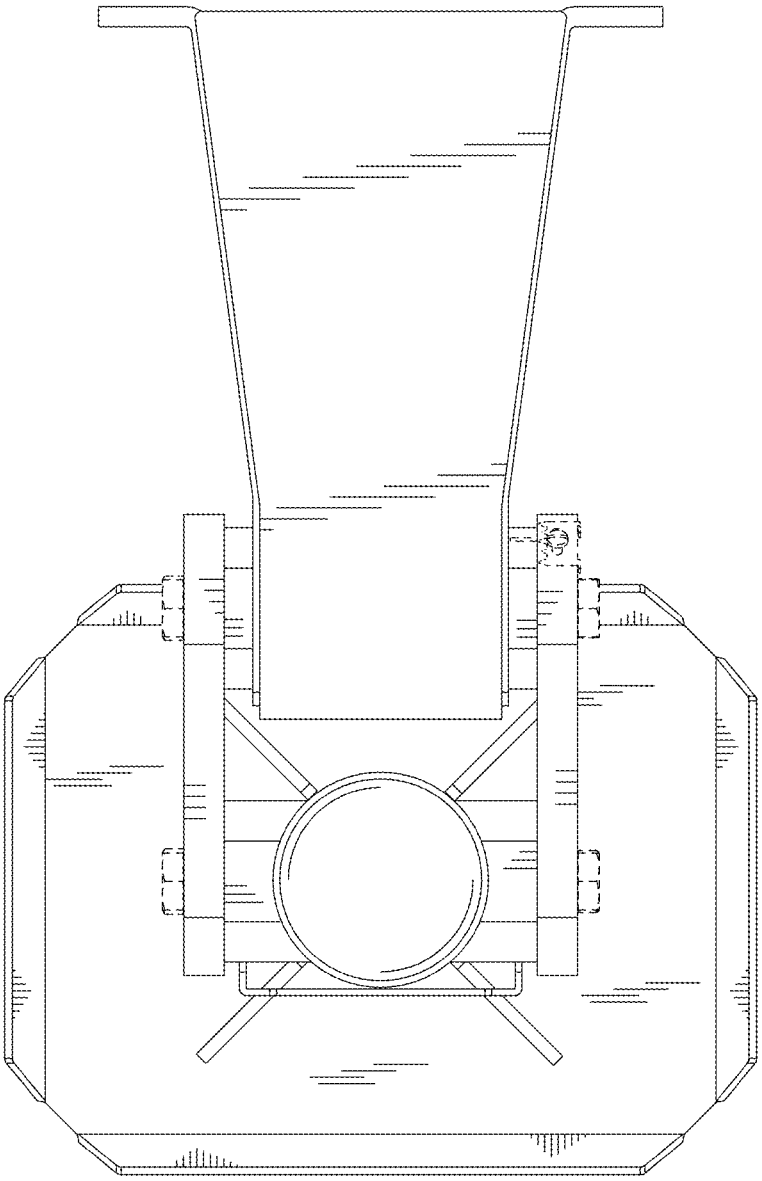

Fig. 7

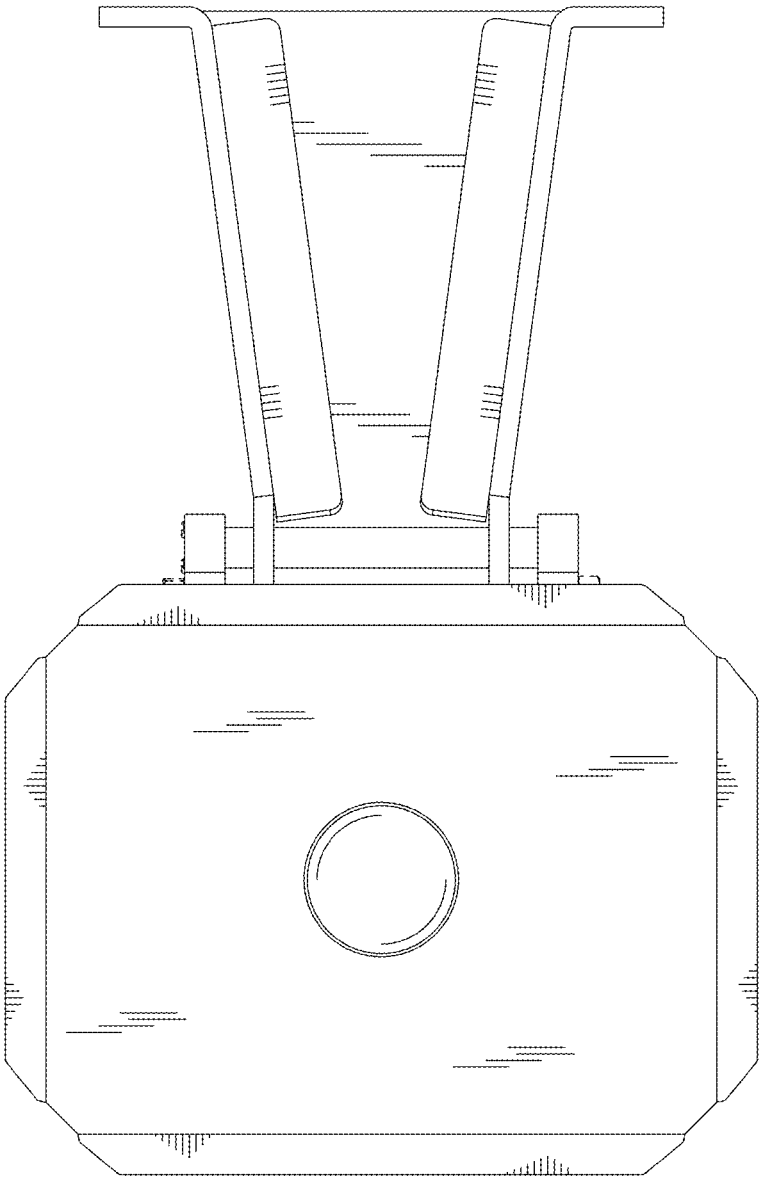

Fig. 8