F. KOHNLE.

RATCHET LOCKING MECHANISM.

APPLICATION FILED APR. 29, 1907.

1,025,530.

Patented May 7, 1912.

2 SHEETS—SHEET 1.

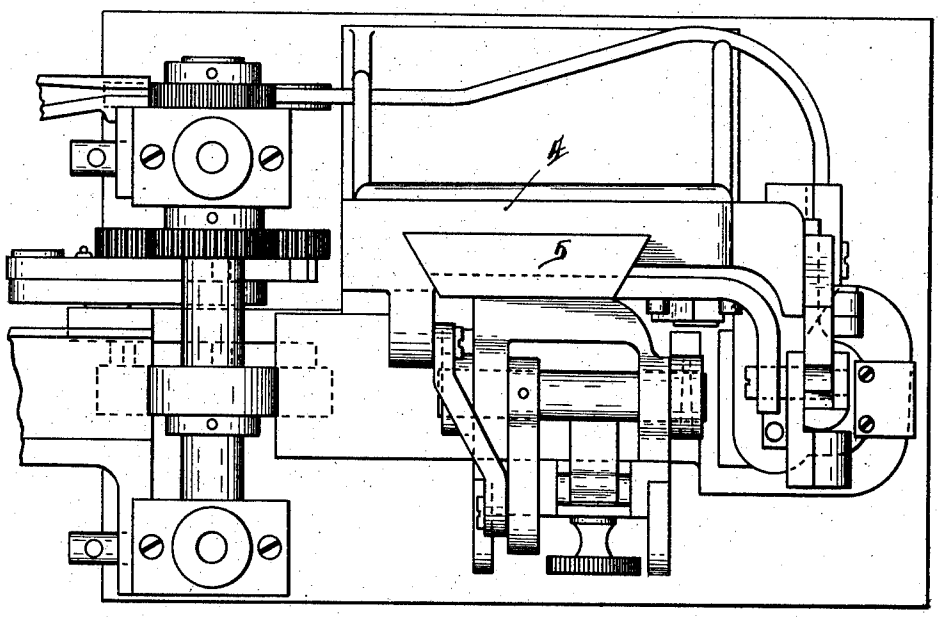

Fig. 1.

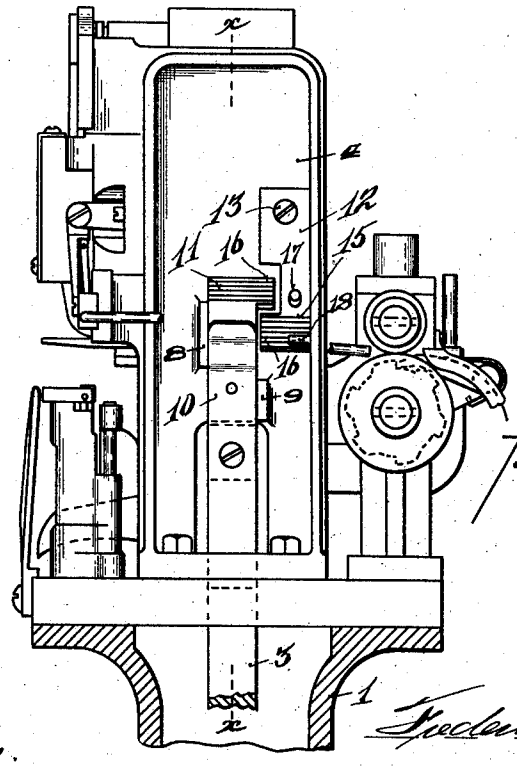

Fig. 2.

Witnesses.

Chas. B. Kaiser

Leo O'Donnell

Inventor

Frederick Kohnle

By

Wood & Wood

Attorneys

COLUMBIA PLANOGRAPH CO., WASHINGTON, D. C.

F. KOHNLE.

RATCHET LOCKING MECHANISM.

APPLICATION FILED APR. 29, 1907.

1,025,530.

Patented May 7, 1912.

2 SHEETS—SHEET 2.

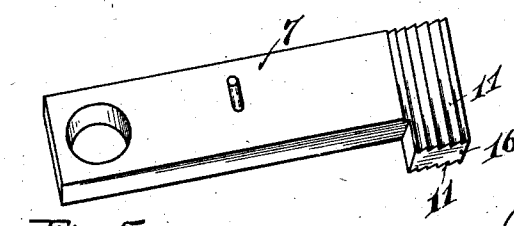

Fig. 5.

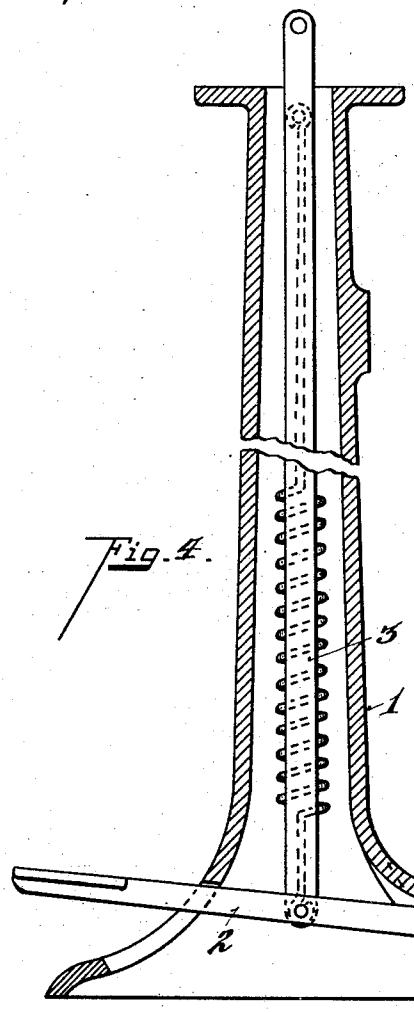

Fig. 4.

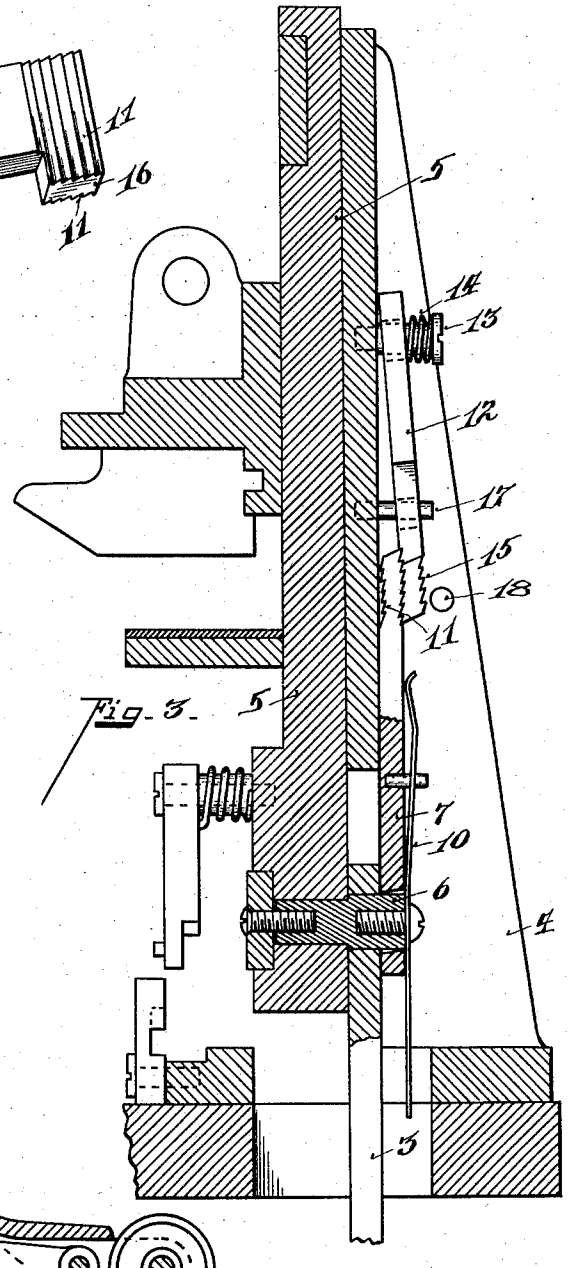

Fig. 3.

Inventor

Witnesses

Chas. B. Kaiser

Leo O'Donnell

By Frederick Kohnle

Woodward Woodward

Attorneys

COLUMBIA PLANOGRAPH CO., WASHINGTON, D. C.

UNITED STATES PATENT OFFICE.

FREDERICK KOHNLE, OF DAYTON, OHIO, ASSIGNOR TO THE OHIO SAFE DEPOSIT & TRUST COMPANY, TRUSTEE.

RATCHET LOCKING MECHANISM.

1,025,530. Specification of Letters Patent. Patented May 7, 1912.

Original application filed April 30, 1906, Serial No. 314,456. Divided and this application filed April 29, 1907. Serial No. 370,991.

To all whom it may concern:

Be it known that I, FREDERICK KOHNLE, a citizen of the United States, residing at Dayton, in the county of Montgomery and State of Ohio, have invented certain new and useful Improvements in Ratchet Locking Mechanism, of which the following is a specification.

My invention relates to an improvement in the control of the operating mechanism of a machine, and as shown is used upon a pin ticketing machine.

One of the objects of my invention is to employ means in connection with the actuating mechanism adapted to engage with means, held against movement, whereby the actuating mechanism must complete its movement in either direction before the same can be reversed.

Another object of my invention is to provide two yielding members adapted to engage with each other and lock the actuating mechanism against reverse motion until a completed stroke is effected, one of said yielding members being mounted upon the actuating mechanism, the other held stationary against such movement, the engaging ends riding over each other in a complete circuit.

The features of my invention are more fully set forth in the description of the accompanying drawing forming a part of this specification, in which:—

Figure 1 is a top plan view of a pin ticketing machine to which my improvements are applied. Fig. 2 is a side elevation of the same. Fig. 3 is a section enlarged taken on line x, x, Fig. 2. Fig. 4 is a central vertical section of the pedestal for supporting the pin ticketing machine, with the treadle mechanism shown in elevation. Fig. 5 is a perspective view of one of the ratchet plates for locking the treadle mechanism and its controlled parts against reverse movement during a partial stroke in one direction.

I have illustrated the devices as applied to a pin ticketing machine, which is fully set forth in an application filed April 30, 1906, Serial No. 314,456, and of which the present application is a division, as illustrating one form of the application of my invention herein. In such pin ticketing machine a strip of paper is fed under a printing press and a strip of wire fed by feeding devices to bring it into proper position to be severed and formed into a staple and forced through the paper after it has been printed and fed beneath the formed staple, and the staple clenched to a piece of cloth which it is desired to tag, or a stapled ticket can be formed on the machine. In the machine shown, this entire operation and the additional functions of feeding a printed slip to a stapling and severing position and feeding the wire to a stapling and severing position, is accomplished by two movements of the treadle. It is absolutely necessary in a machine of this class in order to properly print and feed a strip of paper and to properly feed and staple the wire to prevent a reverse action before a completed stroke is made for such action would injure the print and length of ticket, and knot the wire, throwing the machine out of commission.

The pin ticket printing and making devices and the stapling devices are made the subject-matter of separate applications, and therefore will not be described herein.

1 represents the pedestal upon which the frame of the stapling and ticket mechanism and other operative parts are mounted.

2 represents a treadle pivoted within the base portion of the pedestal, the tread end being projected outward through the pedestal.

3 represents a connecting rod pivoted at one end of the treadle, and projected upwardly within the pedestal.

4 represents the frame upon which the stapling and ticket mechanisms are supported.

5 represents a slide, see Figs. 1 and 3, slidably mounted in a gib-way formed in the frame 4. This slide serves as the main actuating member for imparting motion to the various cam and lever devices employed in the machine, and in its downward movement actuates suitable printing devices for printing a strip of paper, actuates means for forming a staple and driving the same through the paper and cloth to which the pin ticket is to be attached and clenches the free ends thereof, and severs the ticket from the strip. The reverse or upward movement of the slide feeds the strip of paper and wire to a forward position and restores the remaining mechanism to its normal position.

The connecting rod 3 is preferably piv-

oted upon a stud pin 6 secured to the slide 5, see Fig. 3. The free end of said stud pin projects outwardly over which is pivotally supported the reciprocating lock plate 7. The plate slides between the projecting lugs 8, 9, formed on the frame 4, holding the same in vertical alinement.

10 represents a spring fixed to the stud pin 6, its free end bearing against the plate 7 for normally holding the said plate 7 under tension toward the frame 4, the purpose of which will be hereinafter set forth. The free end of said plate 7 on both sides thereof is provided with serrations or ratchet teeth 11.

12 represents a coacting plate loosely mounted upon the screw 13, said screw being secured into the frame 4.

14 represents a spring adapted to impart tension upon said plate 12 toward the frame 4. The free end of this plate 12 is likewise provided with serrations or ratchet teeth 15 formed on each side thereof. Each plate is provided with a lateral projection 16 at such toothed portion thereof, adapted to engage with each other during the upward and downward movement of the slide 5.

17 represents a pin formed in the frame 4 adapted to project through a slot formed in the plate 12 to vertically aline the said plate. The edges of the plates 7 and 12 are beveled respectively so that they will slide past each other, the plates yielding to bring the teeth into engagement with each other, thereby locking the slide against reverse movement from that in which it is traveling until it has completed the movement. The ratchet teeth of the two plates on the inside are the reverse of the teeth upon the outer faces, and on the downward travel of the slide, plate 7 will lie beneath plate 12 and on the return movement of the slide a reverse position of the plates is effected.

The operation of the plates is as follows:—Fig. 2 shows the plates in their normal position, while Fig. 3 shows the slide having made a partial downward movement and is free to move in such downward travel, the meeting faces of the plates riding over the inclined surfaces of the ratchet teeth, but are locked against upward movement. When the slide has completed its stroke the plates will be disengaged from each other, and plate 12 through the tension imparted against it by the spring 14, will be forced against the frame 4 in a vertical line with the lower plate. The upward movement of the slide will cause plate 7 to ride over plate 12 until the limit of upward slide travel is reached, when the parts will reach or occupy the normal position shown in Fig. 2. It will be noticed that the construction of these ratchet plates is such that the traveling member, moves clear past the member fixed to the frame on both strokes. The position of the parts at the upstroke being shown in Fig. 2. This length of travel is essential in order that the opposite ratchet teeth on the respective opposite faces of the two members may be in engaging position during each return stroke.

18 represents a pin secured in the frame 4 to limit the outer or lateral movement of plate 12.

While I have shown the ratchet mechanism as employed in a pin ticketing machine, employing tag feeding mechanism and stapling mechanism, it is obvious that the paper tag feeding mechanism might be dispensed with, and would then be employed in the stapling machine adapted to be used for stapling other articles which would be the equivalent of stapling tags. So also, if the machine is not employed to make the staples, but is employed for making step time movements which necessitates a full complete stroke of the actuating members before a return stroke can be made, the ratchet mechanism preventing a partial return stroke, the devices herein described will accomplish this result, and I do not wish to limit my claims to a machine employing a combined wire and tag feeding mechanism.

Having described my invention, I claim:—

1. In a machine of the class described, a main reciprocating member, a ratchet member having a plurality of teeth on each of its opposite faces loosely mounted on said reciprocating member, and projected laterally at one side thereof, a second ratchet member provided with a plurality of teeth on each of its opposite faces yieldingly mounted on the main frame, and projected outwardly in the plane of the path of travel of the projected ratchet on the moving member, and means to alternately bring into contact the respective projected faces of said ratchet members during the forward and reverse movements of said reciprocating member.

2. In a machine of the class described, a frame, a main reciprocating member slidably supported in said frame and a connecting rod for actuating said member, a ratchet member provided with a plurality of teeth upon each of its opposite faces, yieldingly supported upon said member and projecting laterally at one side thereof, a second ratchet member provided with a plurality of teeth on its opposite faces yieldingly supported upon said main frame and projecting into the path of the traveling ratchet, the free ends of said members being beveled in opposite directions to cause the engagement of the beveled ends to reverse their respective engagement with the opposite faces of said ratchet members at each alternate movement of the traveling member.

3. In a machine of the class described, a

frame, a reciprocating member mounted in said frame, a plate loosely mounted upon said reciprocating member and provided with ratchet teeth on both faces of the free end thereof, a spring for maintaining said plate under tension in a direction toward the reciprocating member, a second plate loosely mounted upon said frame, a spring for maintaining said plate under tension in a direction toward the main frame, said plate being likewise provided with ratchet teeth on both faces of its free end, said plates being provided with means for causing one plate to move and ride over the ratchet surface of the other plate during one movement of the reciprocating member, and reverse their positions during the opposite movement of the reciprocating member to prevent a retreat of the reciprocating member short of its full stroke in either direction, substantially as described.

4. In a machine of the class described, a frame, a reciprocating member supported in said frame, a pair of L-shaped ratchet plates respectively yieldingly mounted upon said reciprocating member and frame, the edges of said L portions being provided with inclined surfaces whereby the ratchet members during the reciprocation of said reciprocating member are caused to alternately engage the respective opposing ratchet faces of said plates to prevent the retreat of the reciprocating member short of its full stroke in either direction, substantially as described.

In testimony whereof, I have hereunto set my hand.

FREDERICK KOHNLE.

Witnesses:
OLIVER B. KAISER,
LEO O'DONNELL.

Copies of this patent may be obtained for five cents each, by addressing the "Commissioner of Patents, Washington, D. C."