United States Patent [19]

Narita et al.

[11] **3,844,466**

[45] **Oct. 29, 1974**

[54] **PALLET MAKING DEVICE**

[75] Inventors: **Tadashi Narita; Shusho Ishimaru,** both of Kanagawa-ken, Japan

[73] Assignee: **Showa Drum Manufacturing Co., Ltd.,** Kanagawa-ken, Japan

[22] Filed: **Aug. 28, 1972**

[21] Appl. No.: **284,104**

[30] **Foreign Application Priority Data**

Sept. 18, 1971 Japan 46-72859

[52] **U.S. Cl.** **227/40,** 227/99, 227/152

[51] **Int. Cl.** **B27f 7/02**

[58] **Field of Search** ..... 227/99, 100, 101, 152, 227/40; 144/288 C; 269/321 F; 29/200 A

[56] **References Cited**

UNITED STATES PATENTS

1,632,085	6/1927	Kurz	227/99
2,540,106	2/1951	Eichelberger	227/152
2,973,022	2/1961	Danielsen, Jr. et al.	227/152 X
3,591,067	7/1971	Vial	227/100 X
3,699,628	10/1972	Gollobitz	29/200 A

Primary Examiner—Granville Y. Custer, Jr.

[57] **ABSTRACT**

The present invention relates to a pallet making device, in which a transportable jig for holding stringer members for a wooden pallet is provided and plank pieces are nailed thereto to form the load bearing surfaces of the pallet in vertical planes in their assembled positions. All the necessary nailing locations in one pallet are nailed from both sides thereof simultaneously by means of a nailing device.

1 Claim, 13 Drawing Figures

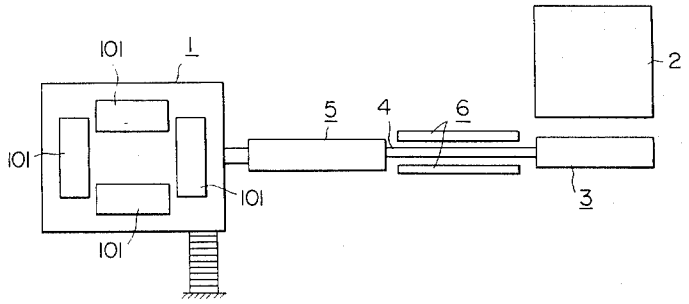

FIG. 1

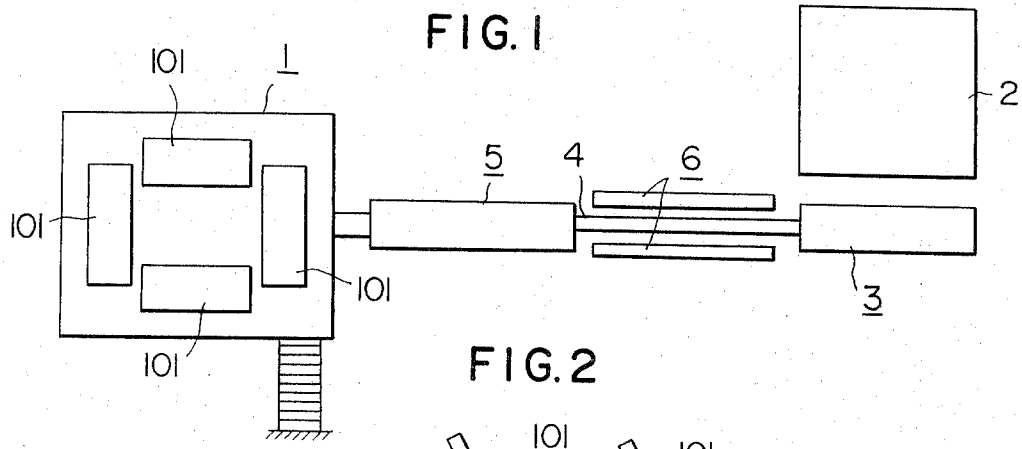

FIG. 2

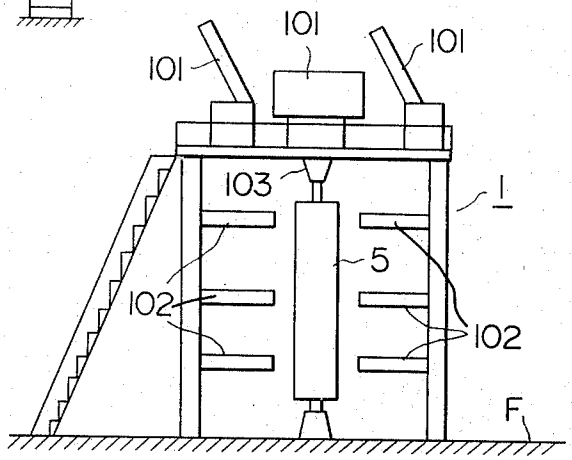

FIG. 3A

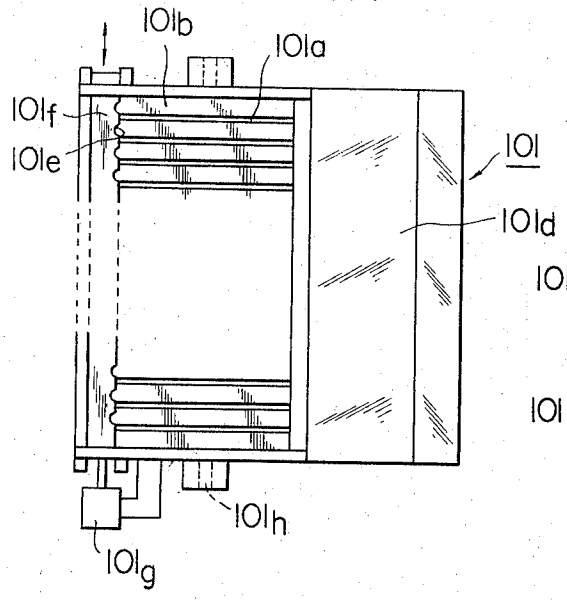

FIG. 3B

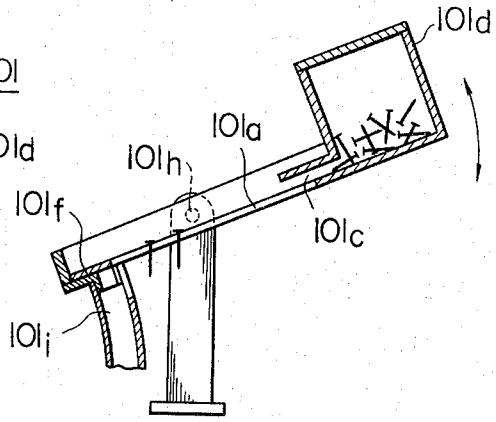

FIG. 4A

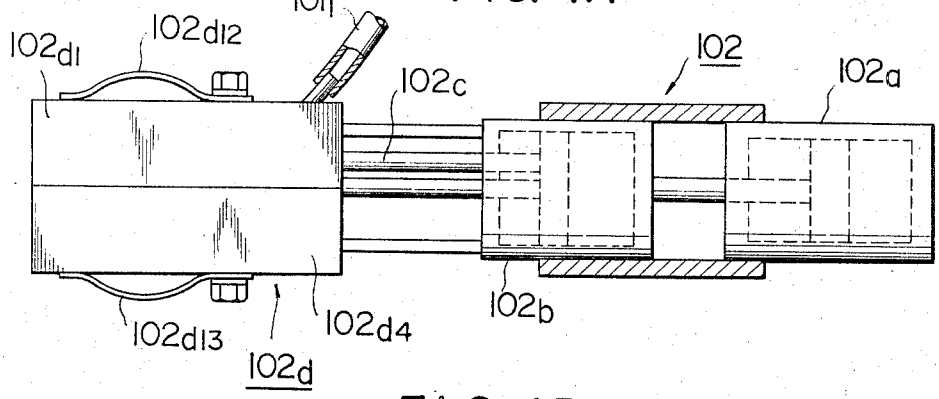

FIG. 4B

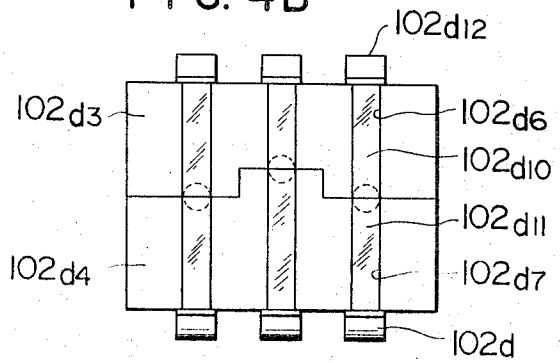

FIG. 4C

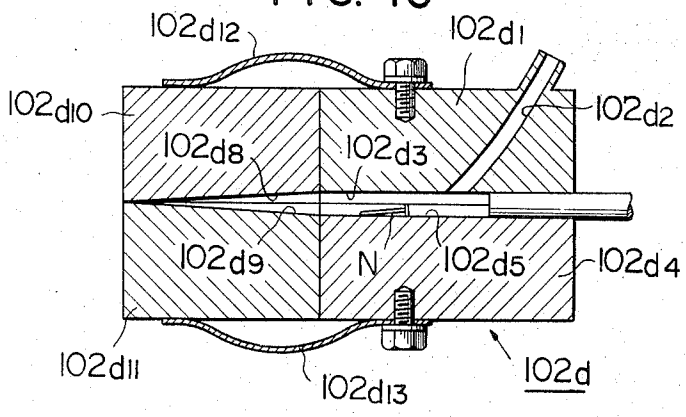

FIG. 5

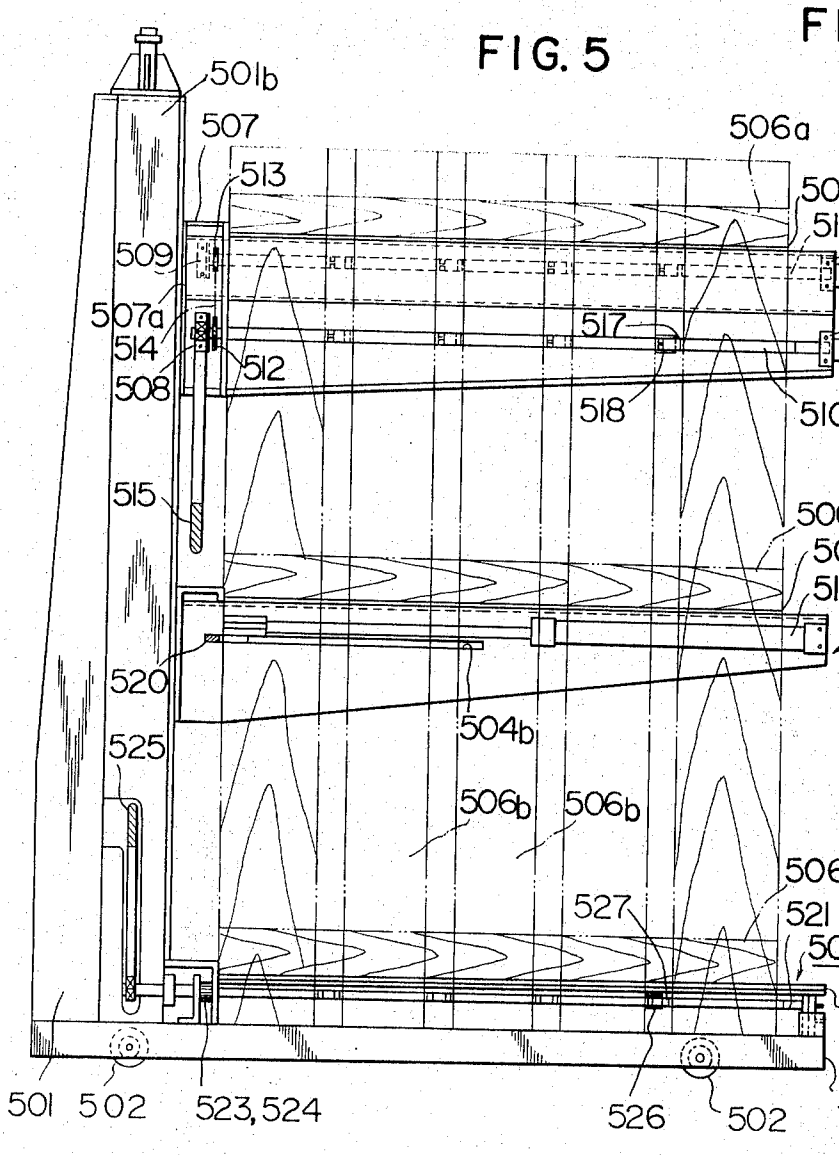

FIG. 7

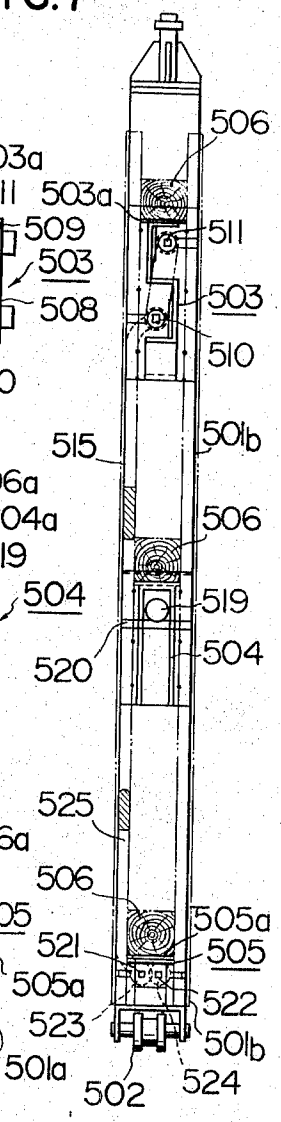

FIG. 6

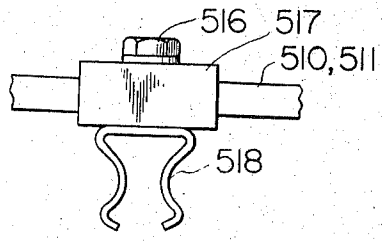

FIG. 8

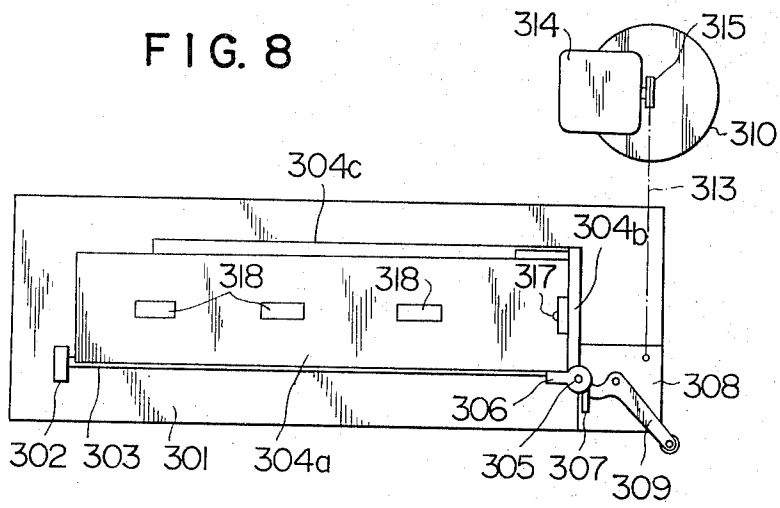
314
315
310
313
304c
304b
318
318
317
308
306
302
303
301
304a
305
307
309

FIG. 9

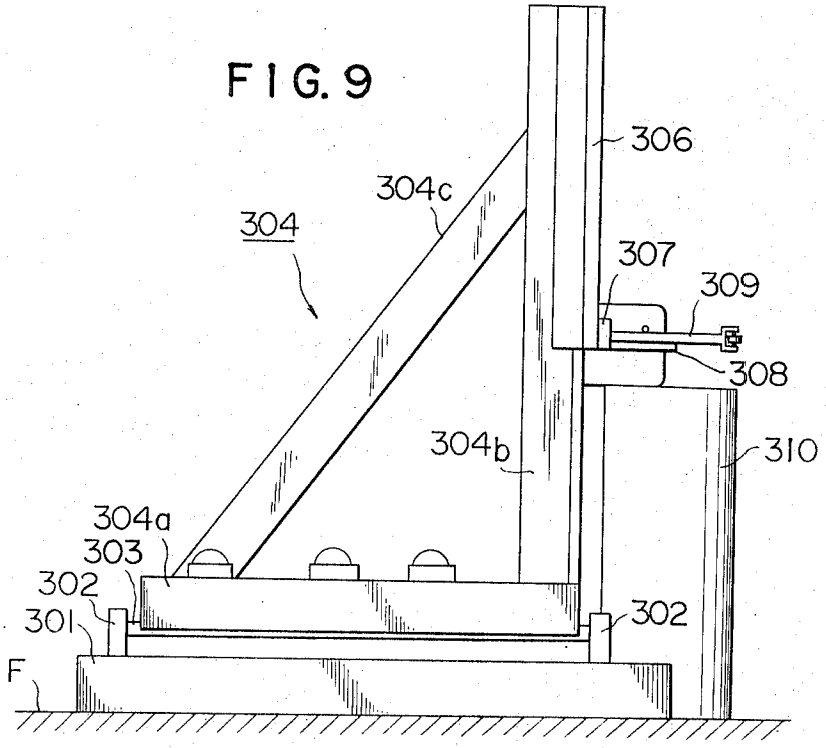
306
304c
304
307
309
308
304b
310
304a
303
302
301
302
F

FIG. 10

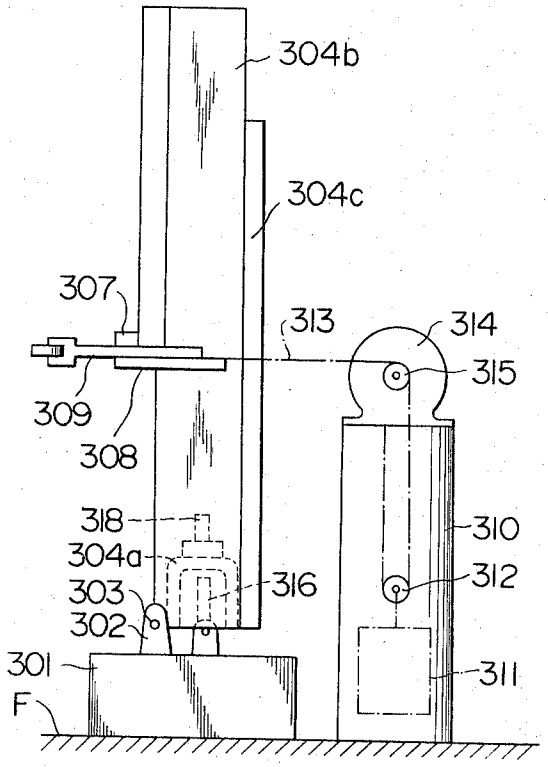
304b
304c
307
313
314
315
309
308
318
310
304a
316
312
303
302
301
311
F

PALLET MAKING DEVICE

SUMMARY OF THE INVENTION

A pallet used in material handling operations is constructed from a plurality of stringer members that are arranged in the same plane at a suitable distance one from the other in a parallel relationship, and from elongated plank pieces that are arranged on both sides of, and at right angle to, said stringer members, in planes parallel to said first mentioned plane. The said plank pieces are joined to said stringer members by means of a plurality of nails driven simultaneously into the intersections between them.

Heretofore, such nail driving operations have been performed by such means as nailing guns. For example, when a pallet is constructed from three stringer members and five plank pieces per side, this arrangement provides 15 intersection locations between the plank pieces and the stringer members where nailing is required. This makes a total of 30 on both sides and requires **90** nailing operations in all, if three nails are driven in each intersection location. To perform this many nailing operations is not easy, even when a nailing gun such as mentioned above is utilized, and also, such an operation is time consuming. Furthermore, heretofore, a conventional pallet making process has been, first to arrange stringer members in a parallel manner on a horizontal surface; then to dispose plank pieces thereover and secure them by nailing; and finally to turn over the nailed structure composed of the nail joined stringer members and the plank pieces, whereby the nailing operation is performed once more on the exposed stringer members. The turning over operation is not only effort-demanding, but also hazard-involving, particularly when a large size pallet is being made.

It is an object of the present invention to provide a pallet making device capable of effectively producing pallets by performing simultaneously a multiplicity of nailing operations for joining pallet composing stringer members and plank pieces.

It is another object of the present invention to provide a pallet making device which is capable of continuously performing semi-automatically a series of operations including; assembling of component members, nailing, and stacking.

BRIEF DESCRIPTION OF THE DRAWINGS

FIG. **1** is a top view showing the principal components of the pallet making device of the present invention;

FIG. **2** is a side view thereof;

FIG. **3A** is a top view of the nail alignment feeding device of the nailing device and FIG. **3B** is a side sectional view thereof;

FIG. **4A** is a schematic view of the nailing head unit,

FIG. **4B** is an end view of the nailing head body and FIG. **4C** is a sectional side view of the same body shown in FIG. **4B**;

FIG. **5** is a front view of the assembly jig;

FIG. **6** is a partial top view of the jig shown in FIG. **5**;

FIG. **7** is a side view of the jig;

FIG. **8** is a top view of the pallet handling device;

FIG. **9** is a front view thereof; and

FIG. **10** is a side view thereof partly in dotted lines.

DESCRIPTION OF THE PREFERRED EMBODIMENT

Referring now to the drawings, the details of the present invention will be described as follows:

FIG. **1** and FIG. **2** are illustrations of the preferred embodiment of the present invention showing a nailing device **1**, a stacking elevator **2**, a pallet handling device **3** that is disposed opposite to said nailing device for stacking completed pallets thereon, and a rail **4** connecting the handling device **3** to the nailing device **1**, all the components of the present invention being fixed onto the plant floor F.

Mounted on the rail **4** is an assembling jig **5**. Also there are mounted on both sides of said rail **4** in the regions near the handling device **3**, a pair of pallet guides **6, 6** that are provided to prevent the completed pallets that are extracted from the jig from falling over while they are being transported to the handling device **3**. Guides **6, 6** are provided for only preventing the falling off of a drawn pallet. Since the inventive concept does not lie in the rail and guide structures per se, the details of which are deemed conventional in the art, is not shown. Broadly U.S. Pat. Nos. 2,540,106 and 3,591,067 show examples of guides and rails associated with nailing machines by wheels **16** on track **24** in U.S. Pat. No. 2,540,106 and guide members on rails **52** in U.S. Pat. No. 3,591,067.

Hereinbelow, each component of the present invention will be described, in detail.

Nailing Device 1

As shown in FIG. **2**, the nailing device is generally formed in the shape of a pylon provided with four nail alignment feeding devices **101**. One of the devices **101** is illustrated in detail in FIG. **3**. At the top thereof, said feeding device **101** serves to feed the nails aligned therein through conventional tubes, that are not shown, into a plurality of nailing heads **102**, one of which is shown in FIG. **4**. In FIG. **2**, the nailing alignment feeding devices **101** in their upper positions operatively feed, as explained hereinafter, to the six nailing heads **102** below which are arranged in rows of three on each side of the assembly jig **5**. Provided on the underside of the top member of the pylon is a hanger **103** for supporting the assembly jig **5**.

As shown in FIGS. **3A** and **3B**, the nail alignment feeding device **101** includes an alignment board **101b** having a plurality of slots **101*a***, each of which has a width that is wider than the nail shank diameter yet narrower than the nail head diameter. At one end of this alignment board, there is provided a nail container **101*d***, having a nail discharge port **101*c*** of a width slightly wider than the nail head diameter. The container **101*d*** is disposed parallel to alignment board **101*b*** and perpendicular to said slots **101*a***. There is also provided on the other end of the alignment board **101*b*** a shutter **101*f*** having notches **101*e*** made therein at intervals equal to the intervals of the slots **101*a*** and with dimensions sufficient to let the nail heads pass therethrough. The shutter **101*f*** is arranged to be driven by a solenoid **101*g*** in receiprocating movement between one position wherein said notches match with the ends of the slots **101*a*** and the other position. Furthermore, said alignment board **101*b*** is adapted to be driven in oscillation by a device that is not shown around a horizontal axis **101*h*** that is at right angle to the slots **101*a***.

There are shown in FIGS. 3B and also 4A nail feed hoses **101***i* being provided to correspond to the respective ends of the slots. In the device just described with each oscillation of the alignment board **101***b*, nails that are contained in the container **101***d* are discharged out through the nail discharge port **101***c* onto the alignment board **101***b*, with the result that the discharged nails are suspended from the alignment board with their heads held in engagement with the slots **101***a*, as the alignment board is driven in oscillation. It follows from the above, that the nails suspended thusly from the slots are caused to slide along the slots and are guided therein, each time the alignment board makes an oscillatory movement. Therefore if the shutter **101***f* is so driven as to bring its notches **101***e* in opposition to respective slots in timing with the approaching of the lowermost position of the shutter end of the alignment board of the nails, they will then drop through the notches **101***e* into the hoses **101***i* and thence be fed to the nailing heads **102.**

Although there are nailing heads **102** provided for each nailing on the pallet, since all are identical in their structure, the following description with reference to FIG. **4** is directed to only one head unit. As illustrated in FIG. **4**A, the nailing head **102** includes a hydraulic cylinder **102***b* that is moved forward and backward by an air cylinder **102***a*, three nail driving rods **102***c* that are driven by said hydraulic cylinder **102***b*, and a head body **102***d* that holds the nails fed in from the nail alignment feeding device **101** via the hoses, while they are being driven by the driving rods **102***c*.

The air cylinder **102***a* has the function of moving the hydraulic cylinder **102***b* forward until the end face of the head body **102***d* is brought in contact with the nailing location on the pallet plank in the jig that is located in the nailing station.

The head body **102***d* is composed of two halves, the upper half piece **102***d***1** which includes passage **102***d***2** for guiding the nails coming down through the hose **101**i, into a horizontal position, and into a semi-circular groove portion **102***d***3**, and the lower half piece **102***d***4** which includes a semi-circular groove **102***d***5.** The two semi-circular grooves **102***d***3** and **102***d***5** form a circular hole that extends therethrough for letting the rod **102***c* that are pushed therethrough when the two halves are correspondingly positioned. These respective passages and guide grooves are arranged to correspond to each nailing position and the required number of nails. In said upper and lower half pieces, there are provided, in alignment with the positions of said each semi-circular groove, recess portions **102***d***6** and **102***d***7** that extend all the way from the top of the piece to the bottom of the piece. The said recess portions extend from the end faces of said upper and lower half pieces, each recess portion containing a set of nail holding jaws **102***d***10** and **102***d***11** and having half conical groove **102***d***8** – **102***d***9,** the large end of which grooves respectively matches with the semi-circular grooves mentioned earlier. The jaws are compressedly held one to another by spring means **102***d***12** and **102***d***13.**

In a nailing head of the structure described, a nail N having passed through the hose **101***i*, is retained in the groove **102***d***5** in a horizontal manner. The end of the head body is pushed against the pallet plank piece and subsequently the hydraulic cylinder **102***b* is actuated. Thusly, the rod **102***c* is caused to push the nail by its head in a forward movement. While the nail is pushed forward in a tapered cavity that is formed jointly by two semiconical grooves of the jaw pieces, its tip is properly oriented towards the nailing point, and then it is driven in by the pressure of the rod **102***c*. While the nail is being driven in, the jaws **102***d***10** and **102**d**11** are pushed open against the resistance of the spring members **102***d***12** and **102***d***13,** so that they do not present any obstacle to the passage of the nail head and to the advancement of the rod **102***c*.

Assembling jig **5** (FIG. **5**, FIG. **6** and FIG. **7**)

In FIG. **5**, a L-shaped jig frame **501** is shown having grooved wheels **502** and **502** at the bottom leg portion **501***a* thereof. The frame **501** is thusly carried on a railing that is not shown, by means of these wheels, and is held in an upright position by means of the support railing members mentioned hereinabove. Extending at right angle from the vertical limb **501***b* of the jig frame and parallel to the bottom leg **501***a* are, from top to bottom, the upper stringer support arm **503,** middle stringer support arm **504** and lower stringer support arm **505.**

The upper stringer support arm **503** is in the form of an elongated trapezoid with its top side extending perpendicular to the vertical limb **501***b*. As seen from the side, its cross section is perpendicular to the longitudinal axis and is in the form of S in which all the bendings are rectangular. Its top surface is narrower than the width of the stringer member **506***a* and fixedly carried thereon is a support strip **503***a* has a width that corresponds to, but is slightly narrower, than the width of the stringer member **506***a*. Furthermore, the arm **503** is provided with a bearing box **507** at its larger end. The arm **503** is adjustably mounted on the vertical limb **501***b* at the base plate **507***a* of the bearing box **507.**

At the end of the arm **503** and in the bearing box **507,** there are provided bearings **508, 508** and **509, 509** respectively. Two of them are near the arm bottom and other two are near the arm top. The corresponding bearings **508** and **508** rotatably support a square rod **510,** and the corresponding bearings **509** and **509** rotatably support a square rod **511.** Furthermore, as shown in FIG. **6,** on each square rod **510, 511,** a dog **517** is slidably mounted so as to be clamped in any desired position along its length. Each dog **517** has plank piece holding jaws that are formed of a generally U-shaped leaf spring material. Its leg portions **518** thereof are curved inwardly, and the dimension between said leg portions of said jaw are determined according to the space between two adjacent plank pieces of the pallet.

The middle stringer support arm **504** is in the form of an elongated trapezoid having its top side extending at right angles to the vertical limb **501***b*. As seen from the side, with its cross section rectangular to the longitudinal axis thereof in an inverted U form, the top surface thereof is narrower than the stringer member **506** in width and fixedly carries a stringer support strip **504***a* that is similar to the support strip **503***a*.

The middle stringer support arm **504** is adjustably mounted by the large end face to the vertical limb **501***b* and contains a cylinder **519** within the space that is confined between the two side members of the inverted U beam. At the output end of the cylinder, a pallet draw hook **520** that extends out through two slots is provided in the two side members of the inverted U

beam in the longitudinal direction thereof and is fixed thereto.

The lower stringer support arm **505** includes square rods **521** and **522**, and stringer support strip **505***a* that are all similar to the corresponding members in the upper stringer support arm. The arm **505** also includes gears **523** and **524** that are connected to the square rods **521** and **522**, and a handle **525** for cranking the rod **521**. The arm **505** also includes plank piece holding jaws **526** and their supporting dogs **527** that are similar to ones in the upper stringer support arm.

Pallet handling device 3 (FIG. 8, FIG. 9 and FIG. 10)

Referring to FIGS. **8** through **10**, a shaft **303** is pivotably supported by two bearings **302** and **302** that are mounted on a stationary bed **301** on the floor F. And onto the shaft **303**, a forward bottom edge of an inverted U-shaped bottom frame member **304***a* of a frame structure **304** is secured by such means as welding.

The frame structure **304** includes an angular section vertical limb **304***b* that is fixed to the top portion of the bottom frame member **304***a* at one end thereof, with its one side edge extending forward, in an upright manner. A back frame member **304***c* is provided that connects the rear side of said vertical limb **304***b* and the back side of the bottom frame member **304***a* for supporting the rear surface of the accepted pallet. On said forwardly extending side edge of the vertical limb, a pallet engage piece **306** is pivotally suported by a pin **305** disposed parallel to said forwardly extending side edge for pivoting into a position in front of the frame structure. The engage piece **306** is provided with a lever **307** that extends at right angles to the engage piece at the bottom end thereof, and this lever **307** is made to engage one end of a bell crank **309** that is pivotally mounted on a bracket **308** attached to the vertical limb **304***b*. It is to be noted further that, although not shown in the drawings, the engage piece **306** is biased by some suitable means such as a spring, in the direction in which the extreme outward edge of the engage piece moves away from the front position of the frame structure.

The bracket **308** securely holds one end of a chain **313** that supports a counter weight **311** through a sprocket **312**, functioning as a free pulley, within a hollow pillar **310**, stationally installed on the floor F. The other end of said chain is securely held by said hollow pillar, and a middle portion of said chain engagedly passing over a sprocket **315** that is driven by a motor **314** that is installed on the hollow pillar **310**.

Further, it is to be noted that on the bed **301**, there is provided a switch **316** that is actuated by the tilting and standing movements of the frame structure **304**, and on the frame vertical limb **304***b* there is provided a pallet detecting switch **317**. On the top surface of the bottom frame member **304***a*, there are provided a plurality of rollers **318** that assist the insertion of a pallet.

The pallet stacking elevator **2** is installed in a pit in such a manner that each time one pallet is loaded thereon, it sinks through a height corresponding to the pallet thickness and when a predetermined number of pallets have been laden, it lifts automatically to expose the stacked pallets above the floor surface.

However, it must be understood that the pallet elevator need not be of the design described above. It may as well be of such a design, for example, as to permit each new completed pallet to be inserted into the bottom of the stacked pallets.

Now, utilizing the device according to the present invention of which the construction has been described above, the production process of a pallet is as follows: First, positioning the assembly jig in the assembly station, the handles **515** assume a position wherein the jaws attached thereon extend outwardly at right angle to the surface of the jig frame **501**. Of course, it is presupposed in this case that each dogs on the square rods are properly set corresponding to the width of the plank pieces **506**b to be built into a pallet.

Stringer members **506***a* are now placed manually by the operator on the respective stringer support strips **503***a*, **504***a* and **505***a*. Then plank pieces **506***b* are pushed into their positions on both sides of the frame, between two adjacent plank piece holding jaws, against the resilience of these jaws. Since, as mentioned above, the distance between the dogs, having the holding jaws, are properly adjusted, it is only necessary to push plank pieces **506***b* into the positions between two adjacent holding jaws to mount them on both sides of the stringer members at right angle to them and at a required interval. It is to be noted that the mounting of a plank member to the jig is carried out manually by the operator.

After completing the assembly of the structural members as described above, the assembly jig **5** is shifted manually into the nailing device **1**, wherein into all the intersections between the stringer members and the plank pieces, nails are driven simultaneously. It is also possible that this nailing operation is arranged to be initiated automatically by a switch that detects the arrival of the assembly jig into the nailing station.

After completing the nailing operation, the assembly jig is brought back manually to the assembling station, whereat the handle **515** is operated to disengage the holding jaws **518** from the plank pieces and the cylinder **519** is actuated by the operator to extract the completed pallet out of the assembly jig **5**. It is also possible that the disengagement of the plank piece holding jaws is arranged to be power driven by such means as a hydraulic cylinder automatically being initiated by a switch detecting the returning of the assembly jig **5** into the assembling station.

It is further possible that the actuation of the cylinder **519** is designed to be initiated automatically by a switch detecting the completion of the disengagement of said plank holding jaws.

When the pallet is pushed out of the assembly jig to the extent of half its width by the cylinder actuation, the operator pulls it out completely, holding the extending part, and slide it over to the handling device **3**.

While the frame structure **304** is in its upright position in the handling device **3**, the switch **316** is in its one status and if a pallet is not inserted in the device, the detection switch **317** is also in its one status. When a pallet is inserted into the frame structure, the switch **317** is tripped into the other status to drive the motor **314** in the forward direction so as to swivel the frame structure **304** around the shaft **303** into the horizontal position. When the frame structure assumes an appropriately horizontal position, the bell crank **309** touches the floor to disengage its end from the lever **307** that is attached to the engage piece **306**. This frees the en-

gage piece **306** to swivel forward under the spring bias away from the front position of the frame structure **304** to disengage the pallet. Thereupon, the pallet drops by its own weight onto the stacking elevator **2** and the detection switch **317** is tripped back to the original status. At this time, due to the movement into the horizontal position of the frame structure **304**, the switch **316** has been tripped into the other status, thereby driving the motor **314** in reverse direction to swivel the frame structure **304** around the shaft **303** into its upright position. When the frame structure **304** is brought fully back to its upright position, the switch **316** is tripped back to the original status to stop the motor. Now the device is again in the starting condition ready to accept the next pallet.

The switching arrangement which is described hereinabove and which is utilized with the pallet making device of the present invention is deemed conventional in the art and an example of detailed circuitry for operatively positioning a jig with respect to an automatic nailing machine is disclosed in U.S. Pat. No. 3,591,067 to Vial.

As has been described hereinabove, by using the device according to the present invention, an extensive man-power saving can be realized in the pallet production, and the pallet cost can thereby be reduced accordingly.

It is further to be understood that although in the illustrated embodiment, the pallet is constructed out of five plank pieces per side, making **10** in total, and three stringer members, the present invention shall not be limited by these numbers, but capable of performing nailing operation on any pallets comprising any number of plank pieces and stringers, by modifying the setting position and number of the nailing heads.

We claim:

1. A device for use in the making of wooden pallets wherein each pallet includes a plurality of stringer members arranged in parallel spaced relationship to each other and a plurality of elongated plank pieces arranged and joined respectively in a perpendicular manner to said stringer members; comprising a nailing device operatively disposed in a vertical plane and having nail alignment feeding means for continuously feeding nails therethrough into nailing head means, said nailing head means arranged for simultaneously performing the nailing operations into the intersection locations of said joined stringer members and said plank pieces; a vertically-oriented assembly jig means operatively mounted adjacent said nailing head means and including a movably-mounted L-shaped jig frame having parallel-arranged support arm means for supporting said stringer members, said support arm means including adjustably-mounted holding jaw means for supporting said elongated plank pieces, said L-shaped jig frame holding said stringer members and said elongated plank pieces in their assembled relative dispositions identical to those of the completed pallet, said assembly jig means being operative between a pallet assembling station and a nailing station in said nailing device; and a pallet handling device for pivoting the completed nailed pallet from its vertical position to a horizontal position after receiving said pallet discharged from said assembly jig means which has been transferred from the pallet assembling station to the nailing station upon completion of the nailing operation.

* * * * *