US00D788488S

(12) United States Design Patent

Terrill et al.

(10) Patent No.: US D788,488 S
(45) Date of Patent: ** Jun. 6, 2017

(54) **ADAPTOR**

(71) Applicant: **SCA Hygiene Products AB**, Gothenburg (SE)

(72) Inventors: **Andrew B. Terrill**, Prairie du Sac, WI (US); **Lance Nehotte**, Madison, WI (US)

(73) Assignee: **SCA Hygiene Products AB**, Gothenburg (SE)

(**) Term: **15 Years**

(21) Appl. No.: **29/560,568**

(22) Filed: **Apr. 7, 2016**

(51) **LOC (10) Cl.** **23-02**

(52) **U.S. Cl.**
USPC **D6/523**

(58) **Field of Classification Search**
USPC D6/515, 518–523; D3/201; 206/389, 206/391, 407, 409; 312/34.1, 34.8;
(Continued)

(56) **References Cited**

U.S. PATENT DOCUMENTS

3,722,929 A * 3/1973 Gilman B65H 75/08 242/571.5
4,298,122 A * 11/1981 Ekelund B65H 75/28 206/227

(Continued)

Primary Examiner — David Muller
Assistant Examiner — Nathan Johnston
(74) *Attorney, Agent, or Firm* — Buchanan, Ingersoll & Rooney PC

(57) **CLAIM**

The ornamental design for an adaptor, as shown and described.

DESCRIPTION

FIG. **1** is a front, left side and top perspective view of an adaptor showing a first embodiment of our new design.
FIG. **2** is a front elevational view thereof, the rear elevational view being a mirror image thereof.
FIG. **3** is a left side elevational view thereof, the other side being a mirror image thereof.
FIG. **4** is a front, right side and bottom perspective view thereof.
FIG. **5** is a front, left side and top perspective view of the adaptor shown in FIG. **1** showing our new design in a different environment.
FIG. **6** is a front elevational view thereof, the rear elevational view being a mirror image thereof.
FIG. **7** is a left side elevational view thereof, the other side being a mirror image thereof.
FIG. **8** is a front, right side and bottom perspective view thereof.
FIG. **9** is a front, left side and top perspective view of an adaptor showing a second embodiment of our new design.
FIG. **10** is a front elevational view thereof, the rear elevational view being a mirror image thereof.
FIG. **11** is a left side elevational view thereof, the other side being a mirror image thereof.
FIG. **12** is a front, right side and bottom perspective view thereof.
FIG. **13** is a front, left side and top perspective view of the adaptor shown in FIG. **1** showing our new design in a different environment.
FIG. **14** is a front elevational view thereof, the rear elevational view being a mirror image thereof.
FIG. **15** is a left side elevational view thereof, the other side being a mirror image thereof; and,
FIG. **16** is a front, right side and bottom perspective view thereof.
The broken line showing of portions of the adaptor is for environmental purposes only and forms no part of the claimed design.

1 Claim, 8 Drawing Sheets

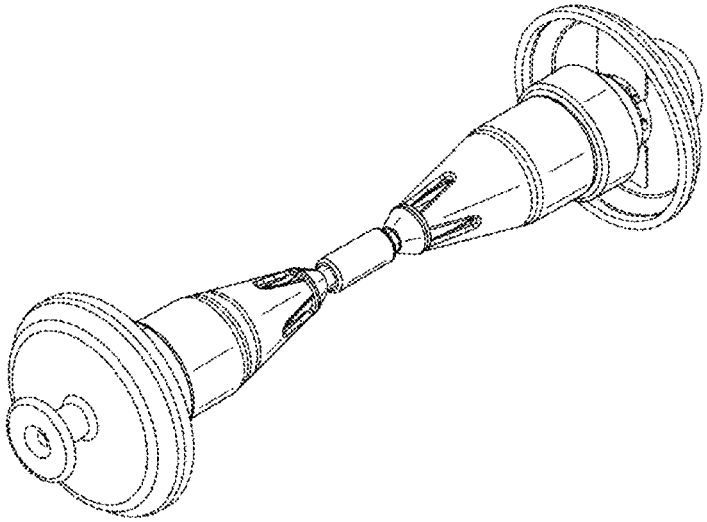

(58) **Field of Classification Search**
USPC 211/16, 85.5, 59.2; 221/92, 97, 185, 282, 221/284; 242/159, 160.2, 550, 560, 590, 242/594, 59, 588, 598, 598.3, 598.65
CPC A47K 10/38; A47K 2010/3206; A47K 10/3612; A47K 10/3625; A47K 10/3662
See application file for complete search history.

(56) **References Cited**

U.S. PATENT DOCUMENTS

D303,887	S	*	10/1989	Reid	52/831
D325,486	S	*	4/1992	Goldstein	D6/518
5,495,997	A	*	3/1996	Moody	A47K 10/38 242/560
5,669,576	A	*	9/1997	Moody	A47K 10/38 242/560.3
D563,707	S	*	3/2008	Lee	D6/549
7,828,240	B2	*	11/2010	Hagleitner	A47K 10/38 242/598.3
7,905,444	B2	*	3/2011	Chen	B41J 35/28 242/571.3
8,096,495	B2	*	1/2012	Billman	A47K 10/40 242/598.3
D666,038	S	*	8/2012	Wilkins	D6/523
D697,332	S	*	1/2014	Huang	D6/518
2014/0263112	A1	*	9/2014	Bird	A47F 1/04 211/59.2

* cited by examiner

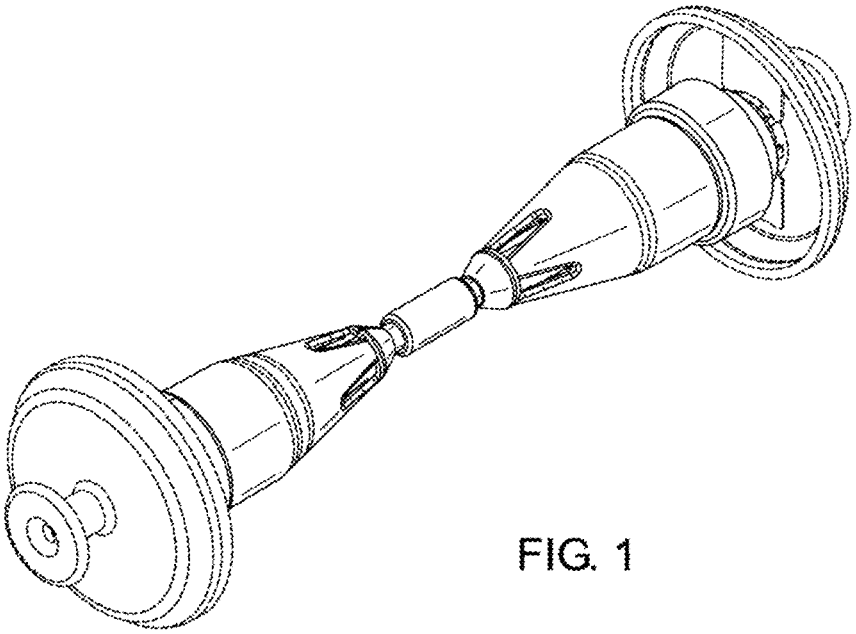

FIG. 1

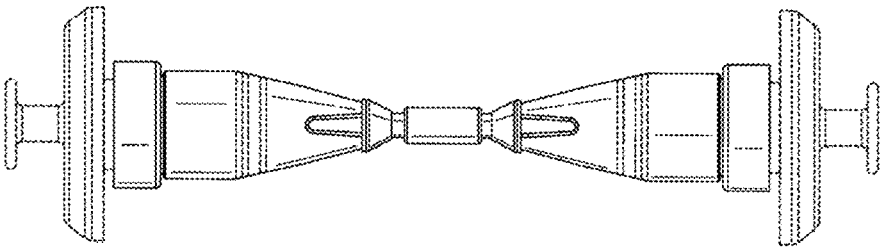

FIG. 2

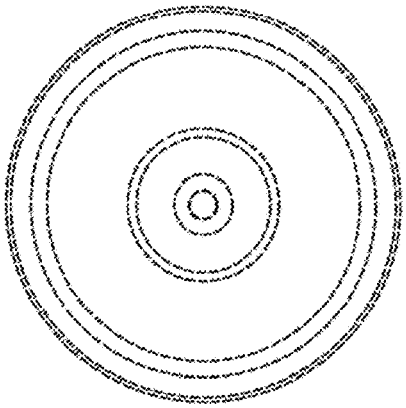

FIG. 3

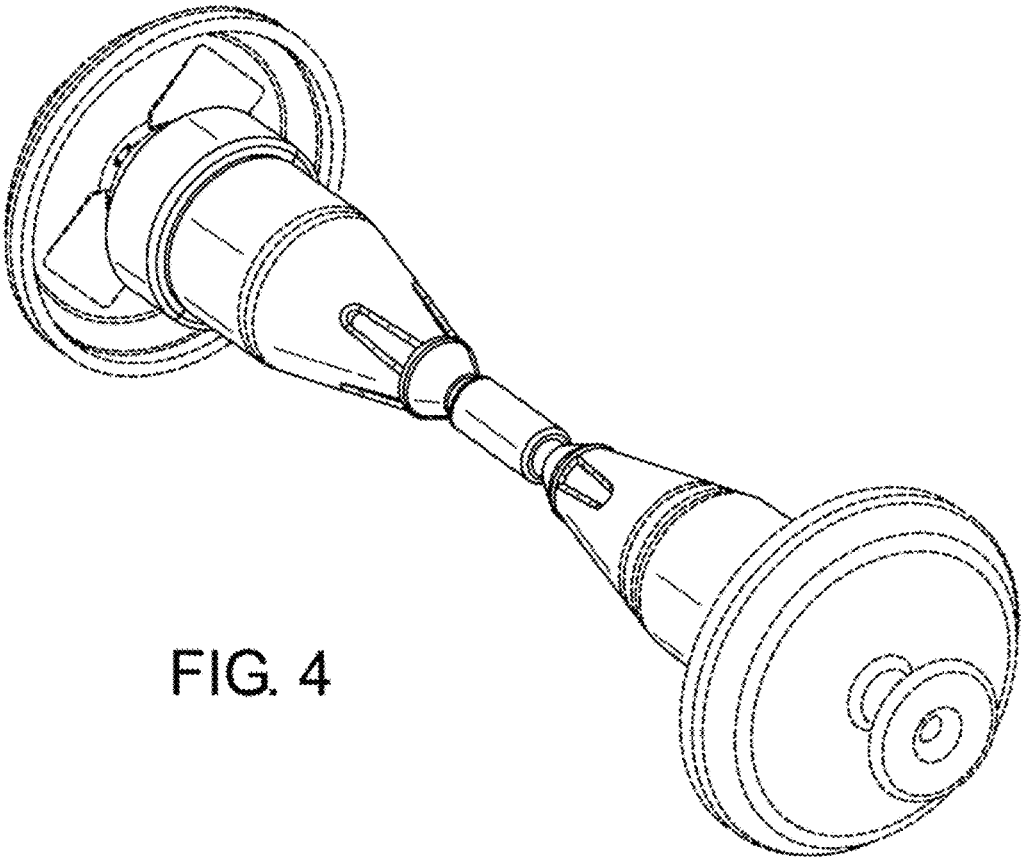

FIG. 4

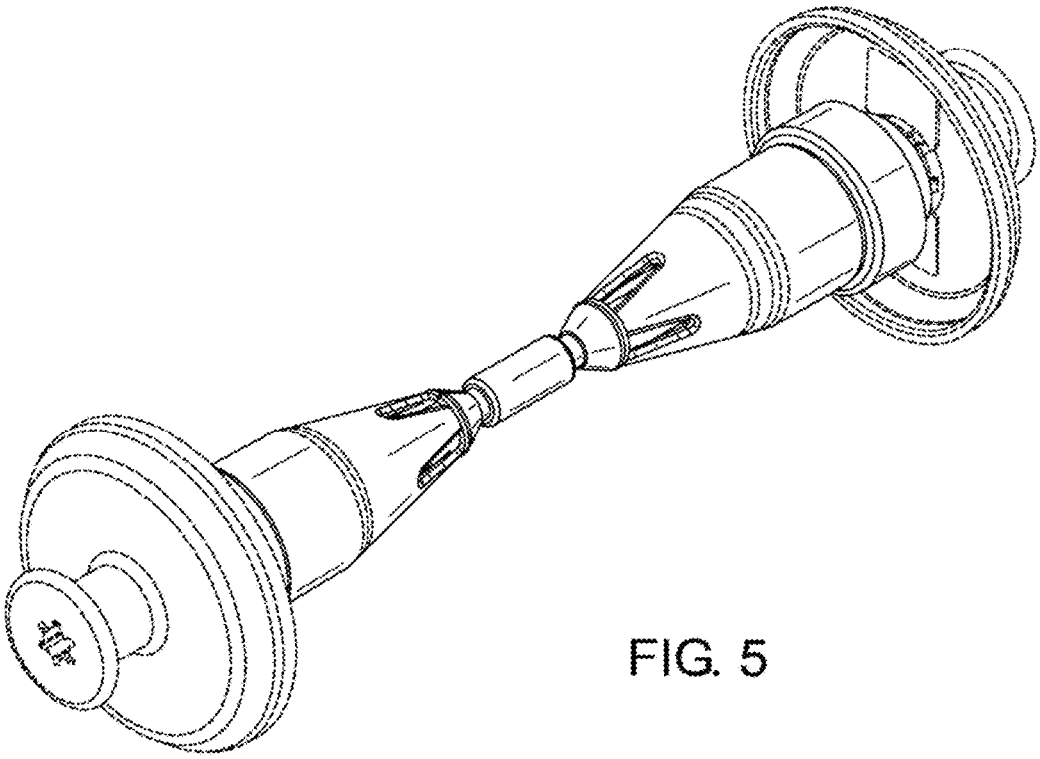

FIG. 5

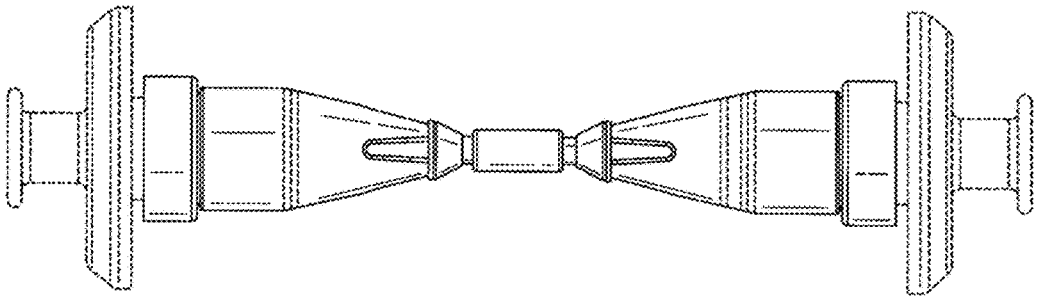

FIG. 6

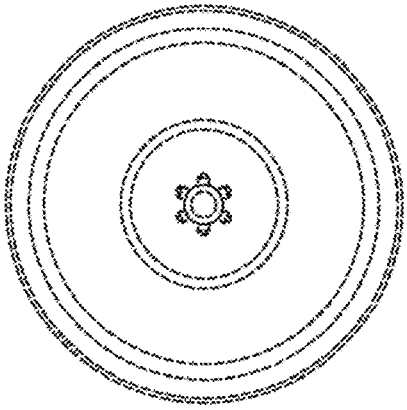

FIG. 7

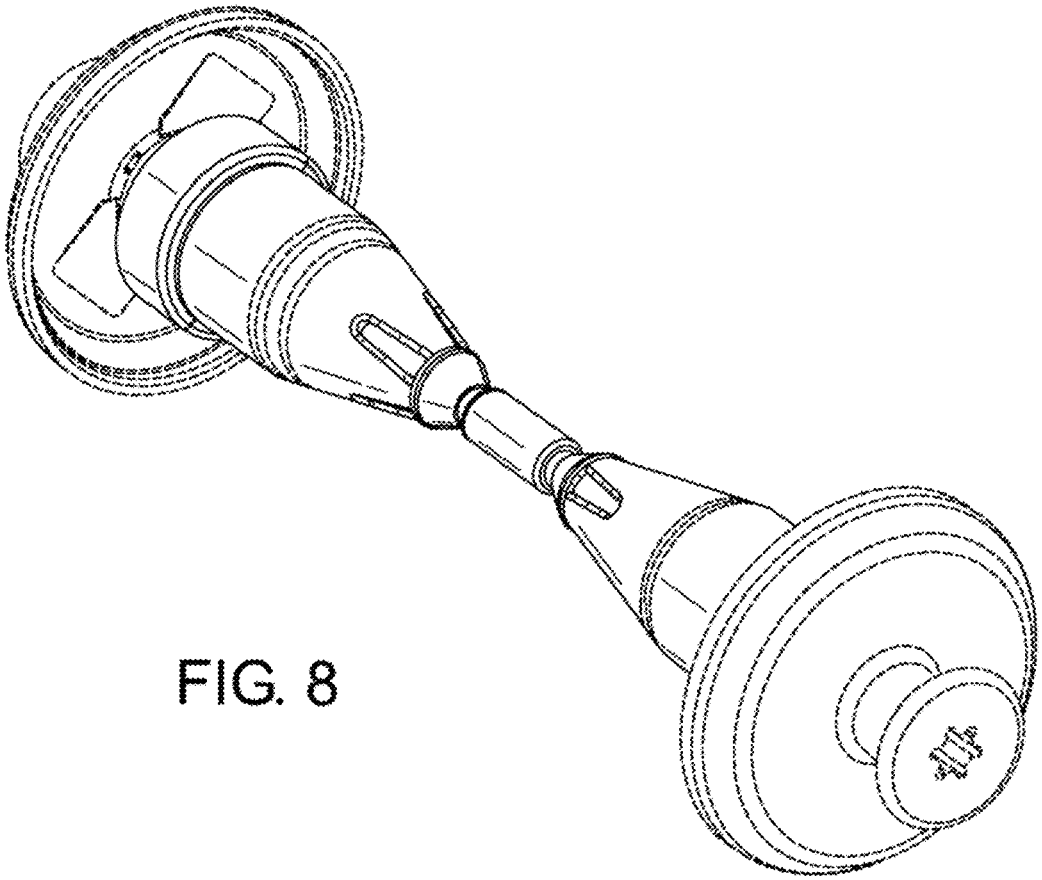

FIG. 8

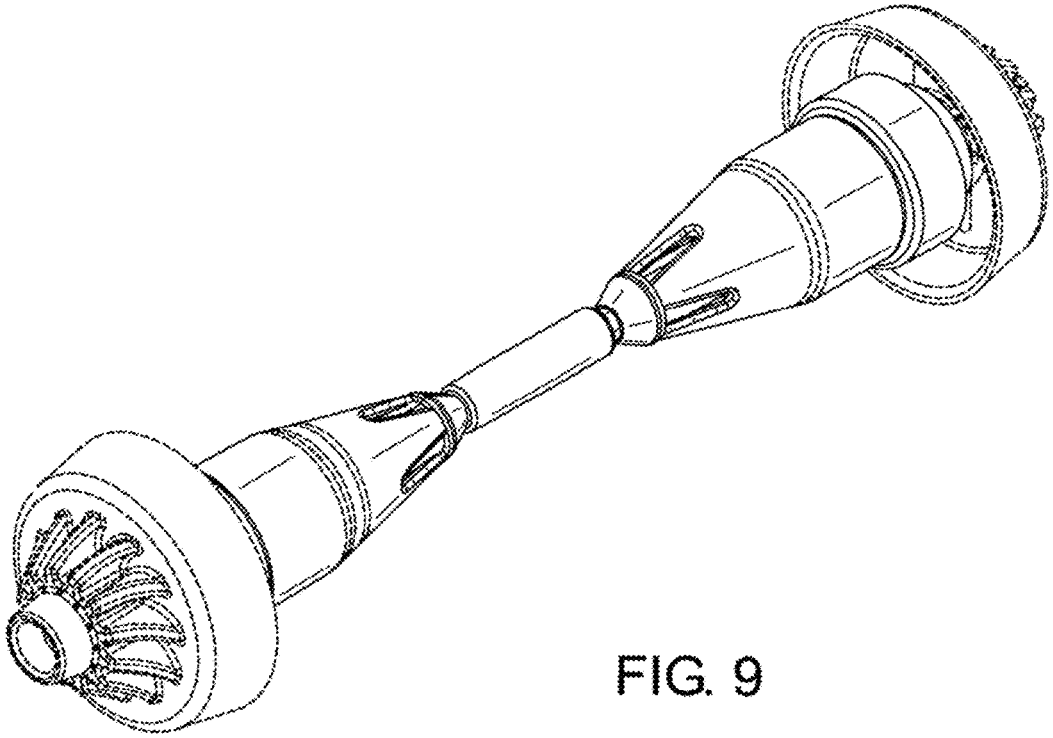

FIG. 9

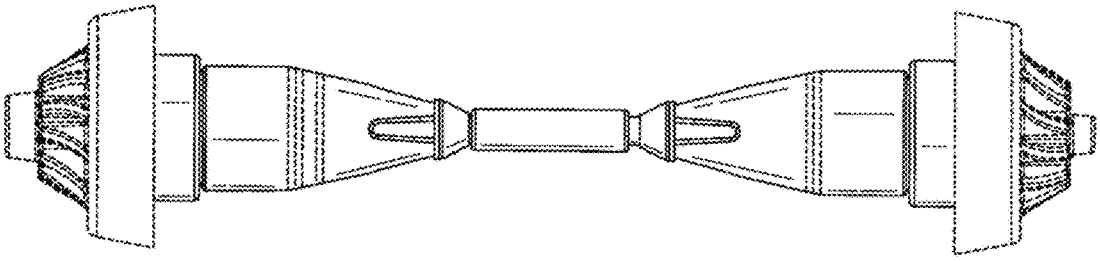

FIG. 10

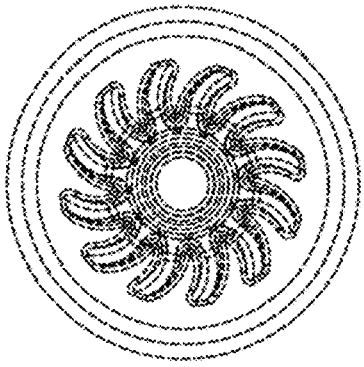

FIG. 11

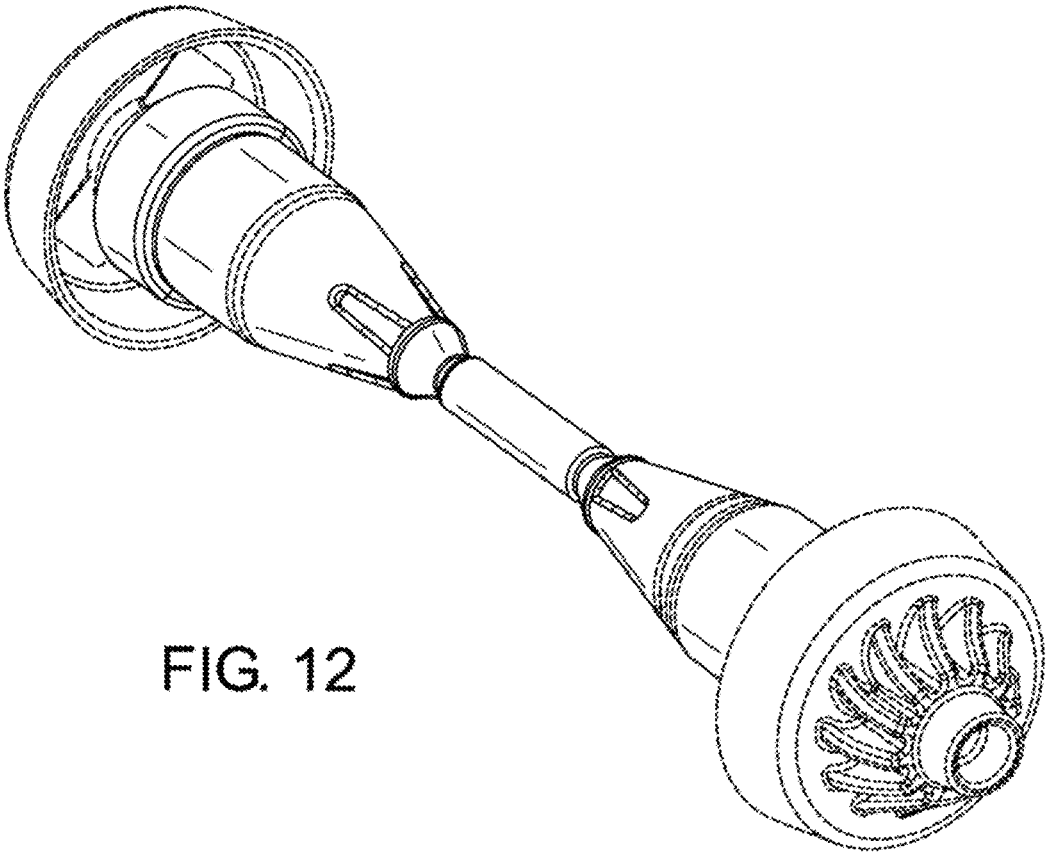

FIG. 12

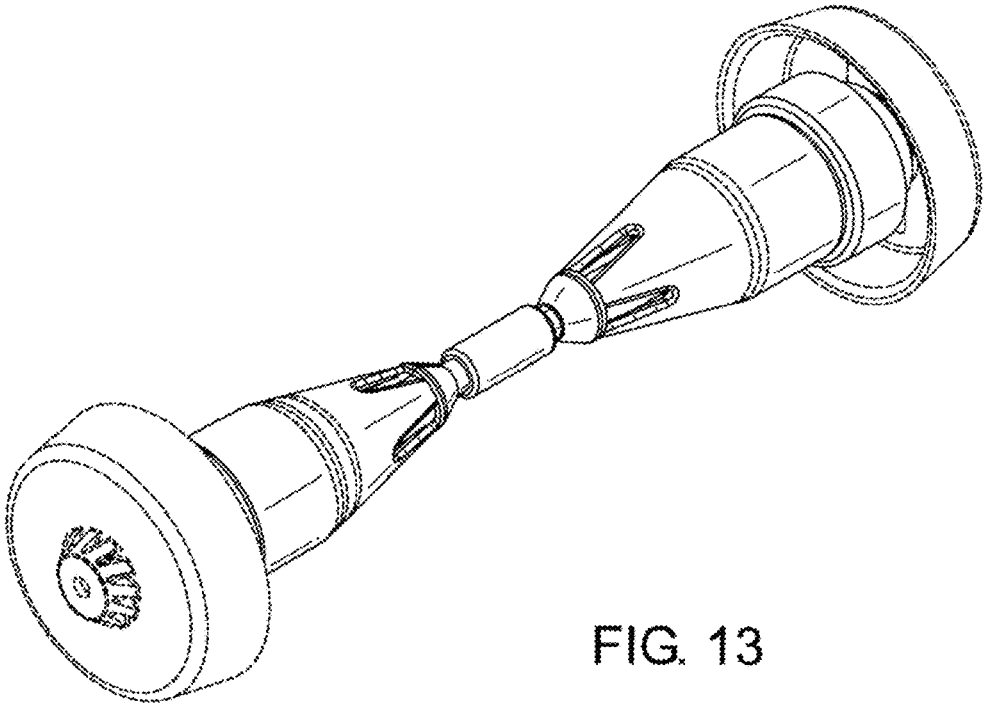

FIG. 13

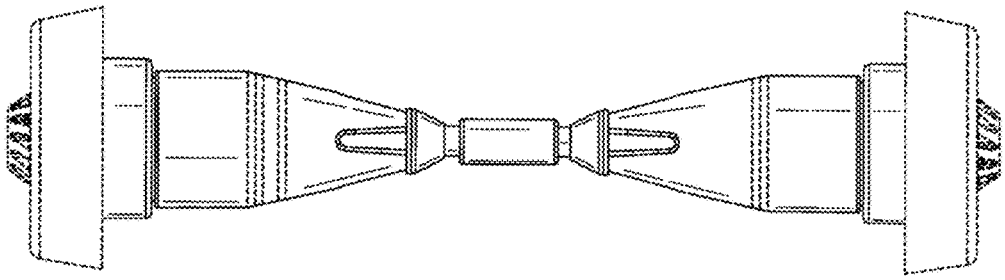

FIG. 14

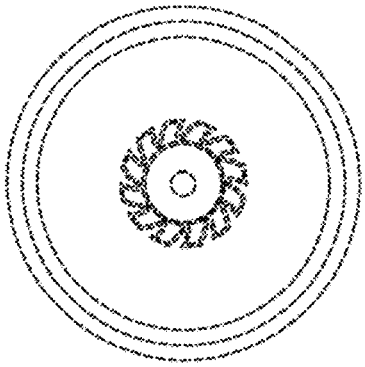

FIG. 15

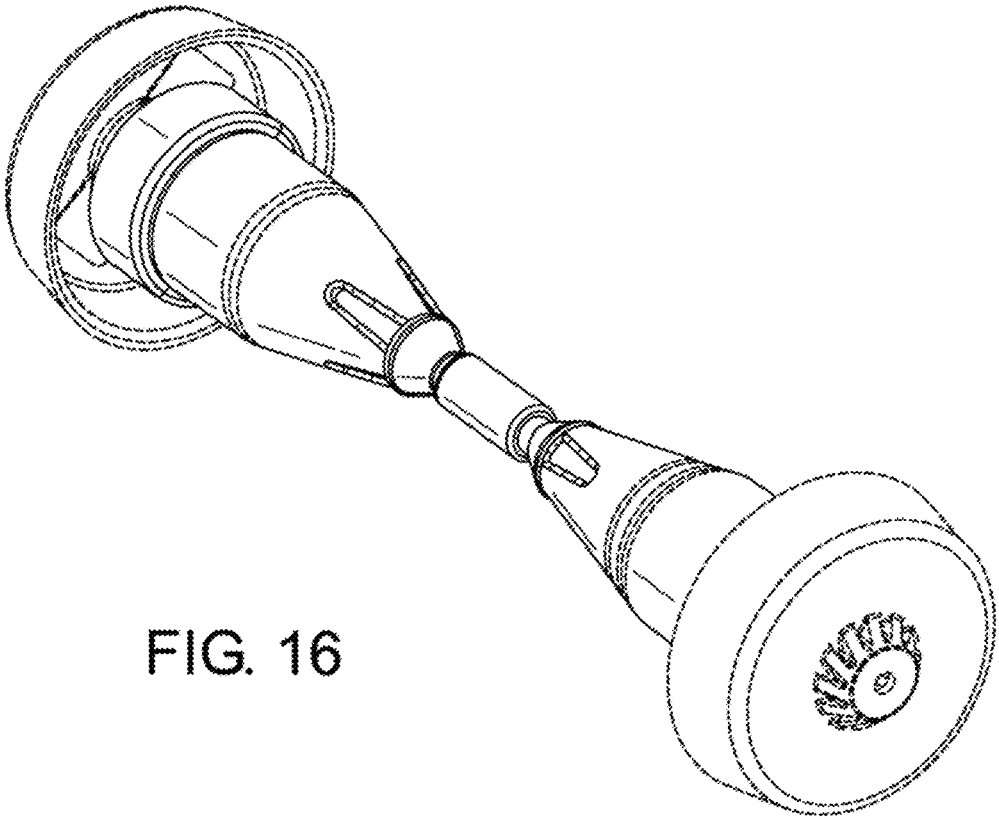

FIG. 16