June 5, 1951 C. H. STRANGE 2,555,864

SWITCH FOR KILNS OR OVENS

Filed June 18, 1948

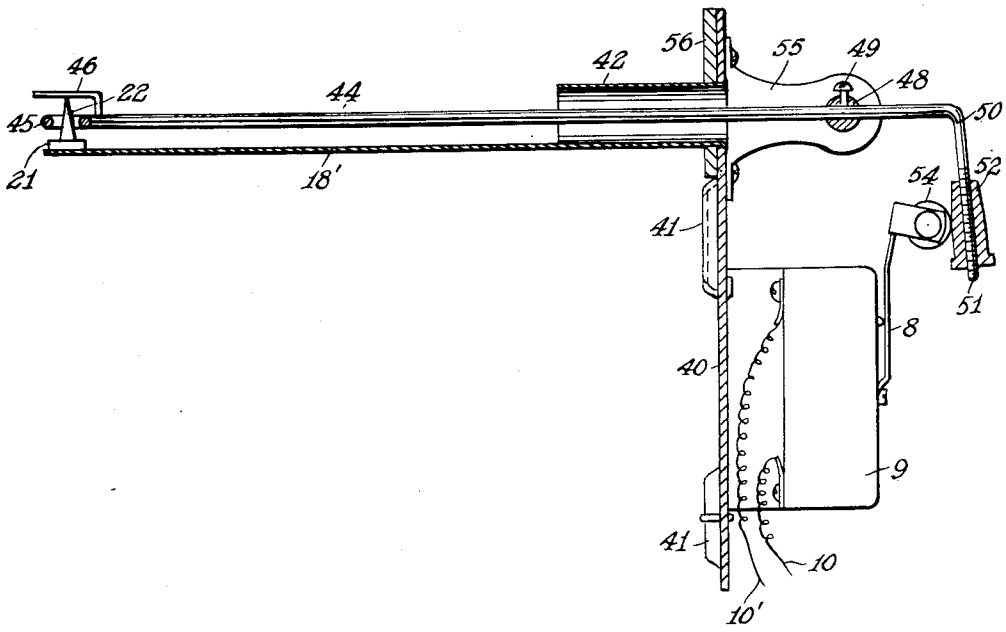

INVENTOR.
CHARLES H. STRANGE
BY Peter A. Boesen
ATTORNEY.

Patented June 5, 1951 2,555,864

UNITED STATES PATENT OFFICE

2,555,864

SWITCH FOR KILNS OR OVENS

Charles H. Strange, White Plains, N. Y., assignor to Elsa Lolita Strange, White Plains, N. Y.

Application June 18, 1948, Serial No. 33,796

2 Claims. (Cl. 200—142)

1

This invention relates to a new and useful improvement in the cut-off or a signal switch for a kiln or high temperature oven such as is utilized for baking ceramics, enamels, heat treating, and the like.

Thus a main object of this invention is to provide a means of automatically shutting off the heat supply to a kiln when a predetermined desired temperature has been attained.

There are devices now being used and known to the art which are operated electrically by means of thermocouples which actuate switches, valves or other means for shutting off the heat supply to the kiln. However, many operators of kilns, especially in the ceramic field do not consider the thermocouple reliable enough to depend upon, and, therefore, install in the kiln pyrometric cones, which they consider more accurate; in addition to the thermocouple. In this invention a pyrometric cone is utilized for operating the cut-off switch.

In some industries utilizing kilns the working temperatures for certain materials are critical, a few degrees below or above the desired temperature being the deciding factor for success or failure in attaining the desired results.

Many kiln operators will not rely upon electrical thermocouple pyrometers for ascertaining the temperature of the firing chamber. They may use the thermocouple pyrometer for observing the time rate of heating only; and then rely upon the desired critical temperature by means of pyrometric cones, which are slender elongated triangular shaped pieces of clay material that become plastic or yielding and bend over or melt at a certain temperature and this condition is observed by the kiln operator through a peep or "spy" hole in the kiln wall, generally in the door to the kiln.

A further and important object of the invention is to utilize a pyrometric cone as the means of actuating the device for shutting the heat supply from a kiln, or operate a warning signal.

The present invention utilizes the collapse or melting of a pyrometric cone to actuate an electric switch, which then energizes a warning signal such as a bell or light, or an electric device which will shut off the heat supply to the kiln.

A still further object of the invention is to provide a cheap and simple means for shutting off a kiln which can be applied to the usual kiln without the use of tools or without altering the design of the kiln or interfering with the customary use of the kiln by the operator.

Other objects and advantages of the invention will be set forth hereinafter or be obvious herefrom, or may be learned by practice with the invention, as realized and attained by means of the instrumentalities and combinations pointed out in the appended claims.

2

With the above and other objects in view, this invention consists of the novel features of construction, combination and arrangement of parts, hereinafter fully described, claimed and illustrated in the accompanying drawing forming part of this application, and in which similar characters of reference indicate corresponding parts in all views, and in which the drawing shows an illustration of my device, partly in section and partly in elevation.

In the invention depending on the collapse of the cone for mechanical movement of the members as shown in the drawing, the cone may be employed in erect position so that the collapsing temperatures are very near those encountered in conventional practice. The form as shown in said figure comprises a base **40** adapted to be held against the kiln wall by magnets **41** secured to the base. A tube **42** has the outer end secured to the base and has a thin extension **18'** of strip or wire material with means such as the cup **21** for supporting the base of the erect pyrometric cone **22**. A long light-weight wire lever **44** passing through the tube **42** and base **40** is provided with a ring **45** on the inner end and has a retainer **46** adapted to engage the apex of the cone. The wire lever **44** passes through a pivoted pintle rod **48** and is adjustably secured thereto by a set screw **49**. The outer end of the lever **44** is bent downwardly as at **50** and provided with threads **51** to receive thereon a conical cam **52** which engages a roller **54** on the lever **8** of a microswitch **9**. The pintle **48** may be suitably mounted on the base as by a bracket **55**. If an asbestos pad such as at **56** is disposed on the inner face of the base for a distance of about an inch from the tube **42** the base may be safely made of brass sheet less than $\frac{1}{32}$ inch thick.

In operation the wire lever **44** is lifted at its inner end and a cone secured in the holder **21**. The ring **45** is then allowed to rest lightly on the cone, as is the retainer **46**, the pressure being substantially due to the weight of the lever **44**. In the position shown the switch **9** is "off" due to slight pressure on the switch lever **8**. When the cone collapses, the ring falls removing the pressure on the switch thereby permitting the latter to return to an "on" position. The cam **52** may be adjusted, or calibrated, so that the switch

is actuated at a higher or even lower (due to the pressure on the cone aiding collapsing) temperature than that conventionally designated for the cone.

The invention in its broader aspects is not limited to the specific construction shown and described herein, but departures may be made therefrom within the scope of the accompanying claims without sacrificing its chief advantages.

What I claim as my invention, and desire to secure by Letters Patent of the United States, is:

1. A thermostat cut-off device for kilns and high temperature ovens comprising, in combination, a base adapted to be held against a wall, a tube mounted in said base, a strip of material extending from said tube, a cup-shaped member mounted at the outer end of said strip, a freely exposed pyrometric cone supported by said member, a lever, consisting of a light-weight wire and passing through said tube and base, a ring upon one end of said wire and adapted to encircle said cone, a retainer, of an angular bend, arranged at the outer end of the wire and engaging the apex of said cone, the other end of said lever being formed with a downward bend, a cam mounted upon the latter, an electric switch, a lever secured to the latter, and rollers mounted upon said lever and adapted to engage said cam, whereby when the cone becomes yielding from heat, it will automatically actuate the electric switch, whereby to interrupt the current to the heating elements of the kiln.

2. A switching device for a kiln or oven, having a hole in a side wall, a temperature control device comprising a normally vertical plate-like mounting member adapted to be disposed against the outer surface of said wall, a tubular member open through the mounting member and secured thereto and adapted to be inserted at least partially into said hole, an extension piece forming part of the tube and extending parallel to the latter, said piece being adapted to project through said hole into the kiln, a normally upwardly open cup on the inner end portion of said piece and adapted to hold the base of a pyrometric cone, the cup being open in a direction at right angles to the axis of the tube, a normally horizontal pintle pin mounted on and parallel to the mounting member, a lever mounted on said pin, passing through said tube and adapted to swing in a limited arc about the axis of the pin to and from the mouth of the cup, a portion of said lever being adapted to engage a part of a pyrometric cone held in the cup, and switching means secured to the mounting member for engaging said lever.

CHARLES H. STRANGE.

REFERENCES CITED

The following references are of record in the file of this patent:

UNITED STATES PATENTS

Number	Name	Date
1,063,012	Cramer	May 27, 1913
1,490,408	Van Aller	Apr. 15, 1924
1,981,484	Werring	Nov. 20, 1934
2,023,377	Werring	Dec. 3, 1935
2,066,632	Lovekin et al.	Jan. 5, 1937
2,235,766	Knaack	Mar. 18, 1941
2,417,860	Cline	Mar. 25, 1947

FOREIGN PATENTS

Number	Country	Date
89,756	Switzerland	June 16, 1921
241,812	Great Britain	Oct. 29, 1925