Jan. 3, 1939. L. FOCHT 2,142,640

STEEL FLOORING

Filed March 12, 1937

Fig. 1.

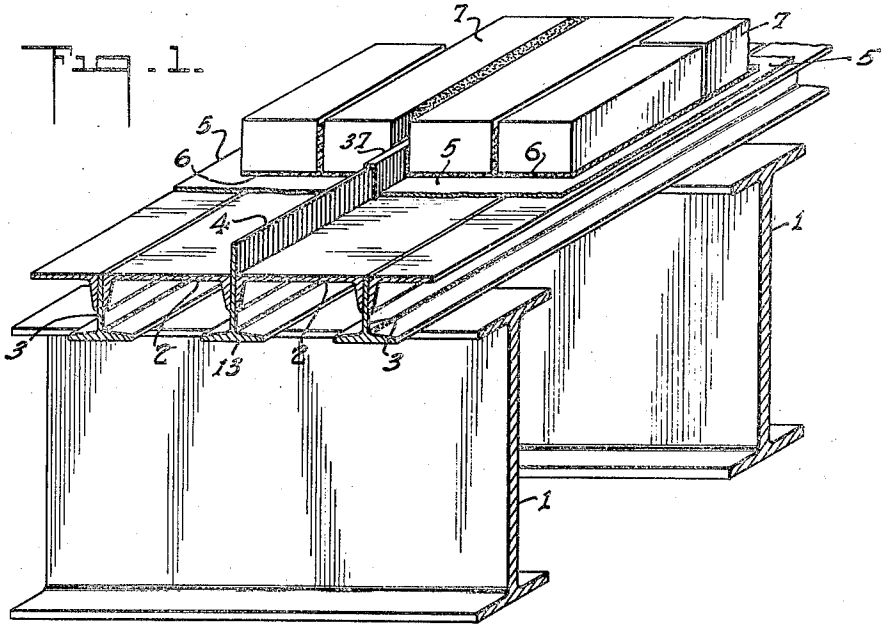

Fig. 2.

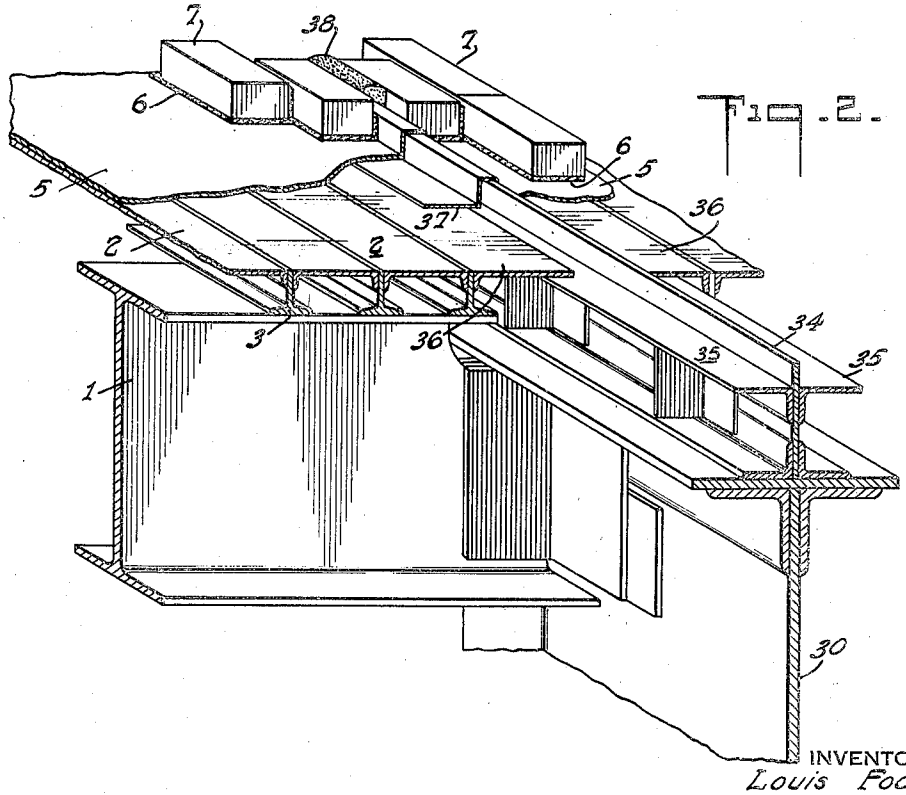

INVENTOR
Louis Focht.

BY
R. Parkhurst
ATTORNEY

Patented Jan. 3, 1939 2,142,640

UNITED STATES PATENT OFFICE

2,142,640

STEEL FLOORING

Louis Focht, Trenton, N. J.

Application March 12, 1937, Serial No. 130,447

5 Claims. (Cl. 189—34)

This application is a continuation in part of my co-pending application S. N. 670,292, filed May 10, 1933, for Floor-supporting structure and more particularly shows and describes a further modification of the broad invention claimed in said prior application, in which said modification the special anti-creep means for preventing the superposed paving layer from shifting its position as the result of traction-produced stresses is more positive in its action than is either of the modifications shown in my said prior application.

In substance the further specific improvement herein shown and claimed comprises the use of fins extending transversely of the direction of such traction stresses and projecting above the level of the steel floor base, each of said fins being anchored between a pair of adjacent, inverted channel members forming a part of such floor proper.

Preferably such fins are formed according to the present invention by having certain of the T-irons which are held between said channel members each provided with an extra high web portion, the free edge portion of which will project above the plane of the webs of the channel members and between two adjacent rows of paving blocks, though such fins may be otherwise installed in such position.

The best form of structure embodying my invention at present known to me, together with one modification, are shown in the accompanying sheet of drawings in which:

Fig. 1 is a fragmentary, isometric view of the construction employing extended T-iron webs, and

Fig. 2 is a similar view showing a separate fin-forming strip held between adjacent channel members.

Throughout the drawing like reference characters indicate like parts.

Referring to Fig. 1, 1, 1, indicate the bridge stringers or other portions of the bridge floor supporting structure on which the deck structure of my invention is directly supported. 2, 2, are channel beams or channel irons or similar channel members of any standard rolled type and cross section arranged with their flanges adjacent one to another, and all the channels on their under surfaces; so that the exterior surfaces of their webs are all in substantially one and the same plane forming the major portion of the upper surface of the structure so assembled. 3, 3, are T-irons the webs of which are inserted between the adjacent flanges of the channel members 2, 2, and are fastened thereto by riveting, welding or in any other desired manner. The T-irons are so arranged that their flanges project beyond and extend across below the free edges of the channel members' flanges.

The webs of the T-irons 3, 3, preferably have their free edges substantially flush with the plane of the channel members' webs, but selected T-irons 13, spaced apart any proper distance (say 30 feet), have extra high webs, the outer edge portions 4 of which project as fins above the surface of the steel floor and between the two adjacent rows of paving blocks 7, 7.

A copper flashing sheet 37 is preferably bent over this T-iron web and a continuous sheet of waterproof fabric 5 is placed over the flashing and the rest of the floor, being pre-molded to fit closely around the flashing if desired.

6 indicates a cushion course of an originally plastic composition, such as sand and cement or similar materials, spread over the floor spaces between fins, and in which the paving blocks 7, 7, may be set before it hardens, if desired.

These anti-creep fins are usually spaced apart about 30 feet, and in case the main floor beams of a bridge are about the right distance one from another to fit into this requirement, or any other fixed by the bridge designer the fins can be conveniently arranged over said beams by forming them of separate strips of steel set between the floor expansion joint parts, which expansion joints are always located over such beams. If that is done the necessity of having special T-irons with extra high webs such as previously described and indicated at 13 can be avoided.

Such a construction is illustrated in Fig. 2 where 30 represents a portion of one of the floor beams, such as above referred to, which usually extend crosswise of the bridge between the lower chords of the main trusses supporting them. 34 indicates an upright steel strip set on edge and extending along the top surface of such floor beam 30 and having special angle plates fastened to it at either side, the lowermost pair serving to hold it upright on the beam. 35, 35, indicate the upper pair of angle plates, on the horizontally extending portions of which rest the wider, horizontally extending flanges of special angle plates 36, 36, the narrower, vertically extending flanges of which are fastened to the webs of adjacent T-irons 3, 3, in adjacent floor units, so that their upper surfaces lie in the plane of the floor thereby formed. The overlapping portions of the horizontally extending flanges of the special angle plates 35 and 36 thus form local expansion joints for the steel flooring as a whole.

The construction shown in Fig. 2 therefore serves both as an expansion joint for the steel flooring and also to present an anti-creep fin or diaphragm for preventing movement of any paving or surfacing material supported by the flooring. In both cases (Figs. 1 and 2) the action of the anti-creep fin is more positive than that of any of the anti-creep means shown in my said prior application and is particularly adaptable for block pavement such as the ordinary wood or asphalt block types. In such case an asphalt seal 38 may be inserted between the adjacent paving blocks immediately over the fin and its flashing cover.

Having described my invention, I claim:

1. A steel flooring for buildings and bridges comprising, in combination, a plurality of rolled steel channel members and T-irons fastened together with said channel members inverted and their webs all lying in one and the same plane while the webs of said T-irons are fastened between adjacent flanges of said channel members with the T-iron flanges extending below and beyond the edges of said channel members' flanges, together with a lesser number of vertically elongated fin members extending from between certain of said channel members above the level of the latter for penetrating any pavement laid thereon, said fin members thereby forming anti-creep devices for preventing any sliding of any pavement laid on said flooring which might otherwise result from the traction stresses applied thereto by motorized traffic passing thereover.

2. A structure such as defined in claim 1 in which each of said fin members is formed by the edge portion of an extra high web on one of said T-irons which projects above the level of adjacent channel members.

3. A combined expansion joint for steel bridge floorings and anti-creep device for pavements supported thereon which comprises a main floor beam, two sets of stringers each supported at one end thereon, and smooth surfaced steel floor units supported on said stringers and adjacent either side of said beam, together with a metal strip set on edge upon and extending along the top surface of said beam, angle plates fastened to either side of said strip with their horizontally extending portions slightly below the level of the upper surfaces of said floor units, and a plate fastened to each adjacent end of a floor unit and extending in the plane thereof over and loosely upon the horizontally extending portion of the adjacent angle plate nearly to the said metal strip, the upper edge portion of said strip extending above the surfaces of said plates far enough to form an anti-creep fin for any pavement thereon in which it would be embedded.

4. As a new article of manufacture, a floor structure for bridges and like purposes comprising a plurality of standard rolled channel members arranged with the exterior surfaces of their flanges closely adjacent one to another and the exterior surfaces of their webs all in substantially one and the same plane, said members being combined with a plurality of supporting members each having a flat section confined between two adjacent flanges of said first mentioned channel members and fastened thereto in positions such that the upper portions of some of them form vertically disposed fins which project above and cooperate with the upper surfaces of said channel members to form keying means for preventing lateral displacement of any paving material which may be applied to such upper surfaces, while their lower portions project below the flanges of said channel members and thus serve as supports for the assembled structure and for resisting tension stresses developing in said structure when in use as a floor.

5. A floor structure for bridges and the like comprising, in combination, a plurality of rolled steel channel members and supporting members fastened together with said channel members inverted and their webs all lying in substantially the same plane, flat sections of said supporting members being fastened between adjacent flanges of said channel members and extending beyond the free edges of said flanges, a pavement comprising a layer of initially plastic material and block members embedded therein superposed on said channel members, and a plurality of elongated fin members extending vertically from between certain of said channel members above the surface thereof to positions intermediate numbers of said block members, said fin members thereby forming anti-creep devices for preventing any sliding of said pavement which might otherwise result from traction forces thereon.

LOUIS FOCHT.