PCT WORLD INTELLECTI Inte

INTERNATIONAL APPLICATION PUBLISHED UNDER THE PATENT COOPERATION TREATY (PCT)

(51) International Patent Classification 6 : A01G 9/22, 9/14	A1	(11) International Publication Number: **WO 96/02124**
		(43) International Publication Date: 1 February 1996 (01.02.96)

(21) International Application Number: PCT/SE95/00860

(22) International Filing Date: 14 July 1995 (14.07.95)

(30) Priority Data:
9402522-8 18 July 1994 (18.07.94) SE

(71) Applicant *(for all designated States except US)*: LUDVIG SVENSSON INTERNATIONAL B.V. [NL/NL]; Marconiweg 2, NL-3225 LV Hellevoetsluis (NL).

(72) Inventors; and

(75) Inventors/Applicants *(for US only)*: HENNINGSSON, Göran [SE/SE]; Enebergsvägen 18, S-511 00 Kinna (SE). ANDERSSON, Hans [SE/SE]; Hästskovägen 10, S-511 56 Kinna (SE).

(74) Agent: GÖTEBORGS PATENTBYRÅ AB; P.O. Box 5005, S-402 21 Göteborg (SE).

(81) Designated States: AM, AT, AU, BB, BG, BR, BY, CA, CH, CN, CZ, DE, DK, EE, ES, FI, GB, GE, HU, IS, JP, KE, KG, KP, KR, KZ, LK, LR, LT, LU, LV, MD, MG, MN, MW, MX, NO, NZ, PL, PT, RO, RU, SD, SE, SG, SI, SK, TJ, TM, TT, UA, UG, US, UZ, VN, European patent (AT, BE, CH, DE, DK, ES, FR, GB, GR, IE, IT, LU, MC, NL, PT, SE), OAPI patent (BF, BJ, CF, CG, CI, CM, GA, GN, ML, MR, NE, SN, TD, TG), ARIPO patent (KE, MW, SD, SZ, UG).

Published
With international search report.

(54) Title: PLANT PROTECTION DEVICE WITH FOLDABLE WATERPROOF PLANT PROTECTION CURTAIN

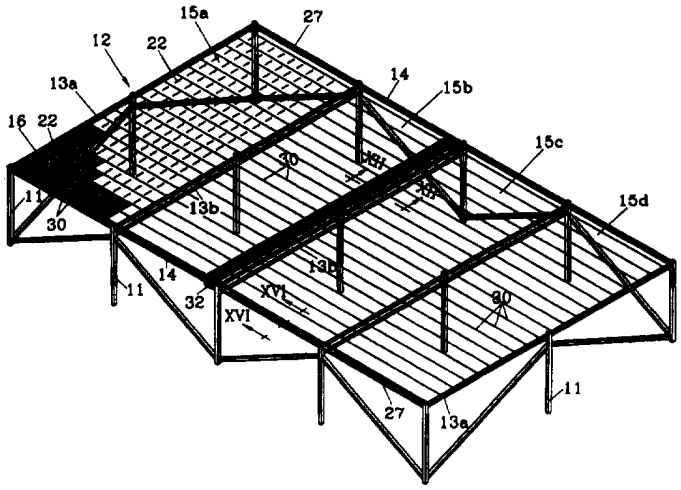

(57) Abstract

Plant protection device in the form of a weather protection extendible over the cultivation. The protection device including a framework (12) consisting of longitudinal and transverse support elements (13, 14) within which at least one waterproof foldable plant protection curtain (16) is extendible from a folded up position and vice versa. The invention also refers to a foldable curtain as a plant protection for cultivations, which curtain (16) has a high tensile strength in its longitudinal and transverse directions and which via connectors (29) is hung up on a number of support lines (30) stretched across the curtain. The curtain is extendible from a folded up position to an extended position and vice versa, whereby the curtain includes a framework (18) consisting of strips or ribbons and/or lines. The curtain (16) is made of a waterproof laminate and is including relative to the curtain movable stretch or reinforcing lines (22) in essentially parallel rows stretching along the curtain's length. The curtain is provided with means which in the extended position of the curtain forms channels (36).

FOR THE PURPOSES OF INFORMATION ONLY

Codes used to identify States party to the PCT on the front pages of pamphlets publishing international applications under the PCT.

AT	Austria	**GB**	United Kingdom	**MR**	Mauritania
AU	Australia	**GE**	Georgia	**MW**	Malawi
BB	Barbados	**GN**	Guinea	**NE**	Niger
BE	Belgium	**GR**	Greece	**NL**	Netherlands
BF	Burkina Faso	**HU**	Hungary	**NO**	Norway
BG	Bulgaria	**IE**	Ireland	**NZ**	New Zealand
BJ	Benin	**IT**	Italy	**PL**	Poland
BR	Brazil	**JP**	Japan	**PT**	Portugal
BY	Belarus	**KE**	Kenya	**RO**	Romania
CA	Canada	**KG**	Kyrgystan	**RU**	Russian Federation
CF	Central African Republic	**KP**	Democratic People's Republic of Korea	**SD**	Sudan
CG	Congo			**SE**	Sweden
CH	Switzerland	**KR**	Republic of Korea	**SI**	Slovenia
CI	Côte d'Ivoire	**KZ**	Kazakhstan	**SK**	Slovakia
CM	Cameroon	**LI**	Liechtenstein	**SN**	Senegal
CN	China	**LK**	Sri Lanka	**TD**	Chad
CS	Czechoslovakia	**LU**	Luxembourg	**TG**	Togo
CZ	Czech Republic	**LV**	Latvia	**TJ**	Tajikistan
DE	Germany	**MC**	Monaco	**TT**	Trinidad and Tobago
DK	Denmark	**MD**	Republic of Moldova	**UA**	Ukraine
ES	Spain	**MG**	Madagascar	**US**	United States of America
FI	Finland	**ML**	Mali	**UZ**	Uzbekistan
FR	France	**MN**	Mongolia	**VN**	Viet Nam
GA	Gabon				

PLANT PROTECTION DEVICE WITH FOLDABLE WATERPROOF PLANT PROTECTION CURTAIN

The present invention concerns a plant protection device in the form of a weather protection device that can be pulled over the cultivation consisting of a skeleton of longitudinal and transverse beams forming at least one rectangular area in which at least one waterproof foldable plant protection curtain can be drawn out from a folded up position and vice versa. The invention also concerns a foldable plant protection curtain.

BACKGROUND OF THE INVENTION

Until now greenhouses have traditionally been glass houses, that is, building frameworks of steel elements with glass mounted both on the sides and on the roof. The disadvantages of greenhouses of this type are that they are expensive to build, that it is too warm in them on sunny days, which requires temperature regulation measures, that their thermal insulation is very poor, which means that they require much heating in the winter, that they produce water condensation, that they do not lend themselves to large scale motorised working of the soil, etc. In recent years there are many cases where foldable greenhouse curtains have been mounted under saddle shaped greenhouse roofs. The greenhouse curtains can be used to regulate the amount of shadow and the temperature conditions and humidity to a certain extent.

Simple plant growing systems of the type described in US-5,265,373 have been proposed which consist of pole constructions bound together on top by a framework which forms open horizontal or slightly sloping frame areas on which double foldable plant protection curtains are mounted so that the shadowing curtain can cover the whole frame area or leave it open. If frost protection is desired the shadowing curtain can be detached from the control cords and another curtain in the same frame area can be attached to them. If the shadowing curtain is perforated water cannot accumulate on it, but if the curtains are to serve as frost protection they must be waterproof. The problem is how to achieve water run off without formation of water pockets and how to support the weight of snow on a thin wire system. Solutions to these problems are not given in this

document.

Through EP-A1-028 282 insulation for buildings in the form of halls, for example greenhouses, is known which consist of bubble films foldable in a zigzag pattern so that they can be used to insulate the inside of the glass roof or sides of the greenhouse as desired. The film is hung up via holders in wires and the opening width of the film folds can be regulated by changing the length of the spacers attached between the zigzag folds. Both in the bottom and in the upper part of the folds there are holes in the film for draining condensation water or for ventilating the multilayered film.

CA-A1-2,094,775 proposes a drainage system for retractable roofs in the form of membranes where wires have been drawn at even distances parallel to the roof ridges of the greenhouse to which the membranes lying on the roof trusses are attached with fasteners. This method of mounting the otherwise loose membranes means that they form a large number shell shaped depressions hung up at four points so that large amounts of water can accumulate, especially when the slope of the roof trusses is small.

THE GOAL OF THE INVENTION AND ITS MOST IMPORTANT CHARACTERISTIC FEATURES

The goal of the invention is to achieve a plant protection device and a waterproof foldable plant protection curtain which is essentially transparent to sunlight, can bind condensation water on its underside through capillary forces, can be stretched sufficiently so that water pockets are not formed and is so designed that snow loading is avoided. This has been achieved through the characteristic features given in the claims.

DESCRIPTION OF THE DRAWINGS

In the following the invention will be described in more detail in several exemplifications with reference to the drawings.

Fig 1 shows a plant protection device in perspective with plant protection curtains according to the invention partly closed and partly open.

Fig 2 shows schematically on an enlarged scale the mesh design of a crocheted curtain before it is laminated with a plastic coating.

Fig 3 shows a cross section of the curtain according to fig 2 after lamination.

Fig 4a, 4b and 4c show schematically on an enlarged scale the mesh design of three alternatively crocheted curtains before lamination.

Fig 5 shows a top view of a frame area of the plant protection device shown in fig 1 with the plant protection curtain in extended position.

Fig 6 shows a section along line VI–VI in fig 5.

Fig 7 shows a cross section through part of the plant protection device according to fig 5 with the curtain in retracted position.

Fig 8 shows a cross section along line VIII–VIII in fig 5.

Fig 9 shows a cross section through part of a modified plant protection device according to the invention with the curtain in extended position.

Fig 10 shows a cross section analogous to that of fig 9 with the curtain in retracted position.

Fig 11 shows a cross section through part of a further modified plant protection device with an asymmetrically drawn curtain.

Fig 12 shows a cross section along line XII–XII in fig 1 on a larger scale.

Fig 13 shows a front view of an alternative connector.

Fig 14 shows a cross section along line XIV–XIV in fig 13.

Fig 15 shows a short section of a spacer.

Fig 16 shows a cross section along line XVI–XVI in fig 1.

Fig 17 shows a modified plant protection device in perspective according to the invention with a saddle shaped roof and with the plant protection curtains in retracted position.

Fig. 18 shows a section through a further modified example accordning to the invention.

DESCRIPTION OF EXEMPLIFICATIONS

In fig 1 a plant protection device 10 is shown which includes a number of spaced poles 11 in rows which support a framework 12 consisting of longitudinal and transverse support elements 13, 14. The framework 12 forms a number of rectangular areas 15 in which at least one foldable waterproof plant protection curtain 16 is extendible from a folded up position (shown in area 15b) to a position covering the whole area 15a.

The curtain 16 shown in fig 2 and 3 consists of a large number of small strips 17 connected together by textile lines which form a yarn framework 18 produced by a weaving technique. The ribbons are arranged tight against each other edge to edge with only thin yarn lines between them so that they form an essentially continuous surface. To show the mesh design the distance between the ribbons 17 has been exaggerated in the drawing. To fasten the ribbons as well as possible the yarn frameworks consist of longitudinal connecting lines 19 and transverse fixation lines 20 and 21 on both sides of the ribbons.

In order that the curtain withstand forces due to weather and wind and also to prevent the occurrence of undesired folds which can impede water run off, it is necessary that it be stretched

in the frame area 15. For that purpose a ribbon is supplemented at even intervals, for example 30–40 cm, by a stretch line 22, the width of which is equal to or less than the width of the ribbon 17a so that it covers the stretch lines on one side of the curtain.

The thus produced curtain is then covered on one side by a surface layer 23 of an appropriate plastic material which preferably is of the same sort as the yarn material in the curtain and possibly also the strips. A group of materials that has shown itself appropriate is polyolefins, in which product group are included polyethylene and polypropylene. The plastic layer or lamination is appropriately made by pressing the softened plastic in the pressurised region between two rollers into the curtain so that the top side has a smooth waterproof surface while the bottom side still retains some textile character. The ribbons 17 are for the purpose of preventing the stretch lines 22 from being cast in the plastic material so that the stretch lines can be moved longitudinally while the other yarn framework 18 with ribbons is firmly attached to the plastic where the yarn framework and to a certain extent also the ribbons comprise a reinforcement in the laminate.

Instead of crocheting the curtain it can also be woven of ribbons 17 in both the warp and weft directions according to fig 4a. Another alternative – fig 4b – is that only the warp be composed of ribbons 17 while the weft consists of textile fibers 25. According to a third alternative – fig 4c – the warp consists of ribbons 17 possibly strengthened by reinforcing lines 24 while the weft consists of textile lines 25 in the form of twisted two or four part bindings as shown in fig 4c. The woven curtain is then laminated with a plastic layer 23 in the way described above. Also here stretch lines 22 have been woven into the curtain which is protected on one or both sides by ribbons 17 so that the stretch lines are freely movable longitudinally in the curtain also after covering it with plastic.

The stretch lines 22 can also be covered with a material which prevents the surface layer from being attached to the stretch lines during lamination. They can also consist in totality of such a material, which for example can be Teflon.

The choice of the strips composing the curtain is dictated by a number of different requirements,

namely whether they are to be poor emitters, transparent, semitransparent, mainly UV opaque or in some other specific way. A wish can be that the material in the ribbons be flame resistant, for example.

If the curtain is to prevent water condensation its underside must be a fiber system, for example of the textile character mentioned above, which can absorb water and transport it away by capillary action. If it is desired to cover both sides with waterproof layers the condensation water can be bound by a flocked fiber covering, for example. Another way of preventing or in any case reducing condensation water drip is to add a surface tension reducing chemical to the polymer.

In the exemplification shown in fig 5, 6 and 7 the stretch lines 22 are integrated in the curtain 16 where they have the double function of stretch lines and reinforcing lines. The stretch lines are free at both ends each of which is attached to a runner 26 in rolling contact with a guide 27 attached to the transverse support element 14. The runners 26 are equipped with a stretching device 28 which makes it possible to stretch the stretch lines 22 between the support element 14. Those parts form together a carrying device 9.

With a spacing of 40 – 60 cm between the stretch lines 22 the curtain 16 is via connectors 29 carried by support lines 30 arranged across the stretch lines. The support lines 30 are fastened to the longitudinal support element 13a at a somewhat higher level than the stretch lines 22. In this exemplification the connectors 29 consist of hooks 29a (modified relative to the ones described in WO 92/12621) which have been attached to the curtains so that the hooks grip under the stretch lines 22, which means that they are tightly fastened to the curtains but can still move along their lengths relative to the curtains. This connection also means that the curtain is divided into stationary upper folding parts 31 along the stretch lines 22, while the curtain between the stretch lines 22 forms softer folds in its lower parts 32.

Manoeuvring the curtain 16 is accomplished using an carrier 33 which via a glide shoe 34 is carried by the support lines 30 and which is run in the guide 27 via a strengthening line 22a and runners 26a at both its ends. Through a number of endless pulling lines 35 spaced at a distance of for example 2 – 3 meters and run around pulleys 38 mounted on the outer support element

13a, the carriers 33 can be moved along the guides 27 between the support elements, whereby the curtains 16 can be extended from their folded positions according to fig 7 next to a longitudinal support element 13a to their extended positions in which the carriers are positioned at the opposite support element 13a or 13b in the same frame area 15 as shown in fig 6. The outer longitudinal support element 13a serve as attachments for the support lines 30 while the inner longitudinal support element 13b serve as attachments 39 for one of the curtain's 16 end edge 16a as shown in fig 12. Manoeuvring the curtain is appropriately accomplished by a motor not shown which drives one of the pulleys 38. Of course it is possible to couple several curtains together in different frame areas 15 and manoeuvre them simultaneously.

The side of the load bearing beam 13b away from the attachment 39 is in the form of an L-shaped flange 40 at the free end of which there is another attachment 41 for a water gutter 42 the opposite end of which is held up by supports 43 attached to the load bearing beam 13b. In many situations one wants to be able to ventilate the area under the curtains also when it is raining and for that purpose the curtains can be opened a crack somewhat smaller than the width of the water gutter 42 so that a drained ventilation opening is obtained.

In the extended position the end part of the curtain at the carrier closes against the angled part 44 of the L-shaped flange, fig 12, and thus overlaps the water gutter 42.

In the exemplifications shown the extended curtain 16 is not plane but rather forms longitudinal channels 36 with the channel tops at the level of the stretch lines 22 and channel bottoms between them. To obtain a specific channel profile there are flexible spacers 37 between the channel tops with shorter lengths than the arc shaped widths of the channels. The spacers 37 thus limit the extension so that the curtains form channels 36 between the stretch lines. The advantage of this compared to a plane surface is that the water run off is controlled in a specified manner while on larger plane surfaces water pockets are easily formed which can become so large that the curtain or the whole plant protection device collapses. The channels according to the invention are supported along essentially their whole length and hung on support lines 30 with a c-c spacing of about 30 - 40 cm which means that water pockets cannot be formed even during the hardest possible rain. The spacers 37 are appropriately lines, ribbons or the like, for

instance composed of so-called loop rope, see fig 15, consisting of a rope with a continuous series of crocheted loops 51 placed at even distances from each other corresponding to the distance between the stretch lines 22. The loops 51 are slipped over the connectors 29 whereby the spacing of the channels is determined.

The stretch lines' 22 position parallel to each other and at a relatively short distance from each other, for example 40 – 50 cm, and their tight stretch between the support element 14 means that in extended position the curtain can be stretched out completely flat during dry weather, that is, the spacers are absent and that channel formation occurs only on loading with water during precipitation.

The stretch lines 22 need not necessarily be attached to the channel tops as shown in the previous exemplification but can be attached in the bottom of the channels as shown in fig 9, 10 and 11, that is just between the upper folding parts 31 of the curtain track 16, in which case the guide 27 is placed at a lower level. Strengthening lines 22a which distribute the load to the attachments over a longer distance are placed in the upper folding parts 31. A reason for placing the stretch lines 22 in the bottom of the channels instead of in the upper parts 31 is that the channel bottoms can better be stretched up thus preventing folds in the channel 36. Furthermore no spaces 37 are necessary, since the curtain in streched position is forming natural channels 36.

The stretch lines 22 can also be arranged asymmetrically in relation to the upper folding parts 31 as shown in fig 11 whereby the folded curtain packets' width can be reduced compared to the previous exemplification. It is also possible to have stretch lines both in the upper folding parts 31 and between them.

The connectors 29 can be shaped in a number of different ways, as hooks 29a which are applied manually to the curtains or as is shown in fig 13 and 14 as clips 29b of an appropriate plastic material. The clips are U-shaped in cross section between the shanks 45 of which the curtain 16 with included stretch line 22 or reinforcing line 22a can be placed. Two rivets or a double rivet 46 is inserted in a hole in the shanks and through the curtain. The pinning effect itself for holding the curtain tight can be obtained in different ways. In the exemplification shown the

shank pressure is achieved by a tong (not shown) which using heat can simultaneously flatten the rivet ends so that rivet heads are formed. The shanks' inside surfaces opposite the stretch lines are shaped with a recess 47 which is large enough that the stretch line 22 is freely movable along its length. The recess 47 is performed with a cantilever 53 in the passage to the slott between the shanks 45, where the curtain is clamped. The stretch line can be integrated with the curtain 16 or also it can be loose and for example can already be stretched between the support element before the curtain is placed on the stretch lines and affixed to them by the connectors 29.

In its upper part the clip 29b is shaped with a hook 48 equipped with a wide part 49 at the free end of the hook which wide part can be inserted into a correspondingly shaped recess so that the hook can be secured from withdrawal from its connected position. The hook 48 is hooked on the supporting line 30 and secured. In the transition from the clip and the hook 48 the clip 29b has a neck 50 around which the spacer's 37 loop 51 can be fitted.

The framework 12 is given a slight slope, for example 2 degrees, in the direction of the length of the support element so that the curtains' channels 36 slope to the same extent so that good water drainage is obtained. At the lower end of the channels along the transverse support element 14 water gutters 52 are placed which transport the water to drain pipes (not shown).

As shown in fig 17 the invention is not limited to plant protection devices with plane roofs but rather can also be applied to saddle roofs. In that case each frame area 15 forms one part of the slanting saddle roof while the upper frame of the gable roof trusses corresponds to the transverse support element 14 and the main bar of the longitudinal support element 13. The stretch lines 22 are thus stretched between the upper frames and the support lines 30 follow the slopes of the saddle roof. In the same way as in the exemplification according to fig 6 the curtain track stretches unbroken from the first main bar 13a to the roof ridge, corresponding to the support element 13b, thence to the roof beam, which is also a support element 13b, and up to the next roof ridge 13b, etc, to the last main bar 13a. Plant protection devices of up to 100 meters' length or more are entirely possible. All of the curtains in each frame area can be manoeuvred simultaneously and be extended or folded up in a single work step.

In the example shown in fig 17 the curtain is stretched so that it is essentially plane because the stretch lines are oriented transverse to the run off direction and no real channel formation is desired. The valleys in the channels between two frame areas 15 sloping toward each other, that is, the support element that act as roof beams 13b, should slope slightly so that he water in the channels can run off.

In case of snow in the first instance the usual heat for heating the plant protection should melt the snow so that no thick blankets of snow can build up and should that heat not be sufficient electric wires in the curtains in longitudinal and/or transverse directions can be coupled to an electrical source (alternatively low voltage source) so that direct heating of the curtains can be achieved.

In previous examples streching the curtain is achived by means of the strech lines 22, which by way of runners 26 or the like are movable along the transverse support element 14 of the framework 12. In Fig. 18 the strech lines 22 are replaced by bars 51, which are fastend to the upper folding part of the curtain or adhered in other way. The purpose of the bars are to keep the curtain streched along the entire length between the transverse support elements 14, however without being connected to them. The bars 51 are carried via the connectors 29, for example via the hooks 29a, by the support lines 30.

Alternative the bars 54 can be designed with rigid connecting devices in a similar way as the clips 29b in Fig. 13 and 14, where the bars 54 constitute laterally extended carriers

LIST OF REFERENCE DESIGNATIONS

9	carrying device
10	plant protection device
11	poles
12	framework
13	longitudinal support elements

14 transverse suport elements
15 rectangular areas
16 plant protection curtain
17 ribbons
18 framework
19 connecting lines
20 fixation lines
21 fixation lines
22 stretch line
22a strengthening line
23 surface layer = plastic coating
24 reinforcing lines
25 weft lines
26 friction reducing device for example runner
27 guide
28 stretching device
29 connector
29a hook
29b clip
30 support lines
31 upper folding part
32 lower folding part
33 carrier
34 glide shoe
35 pulling lines
36 channels
37 spacer
38 pulleys
39 attachment
40 flange
41 attachment

42 water gutter
43 supports
44 angled part
45 shanks
46 double rivet
47 recess
48 hook
49 wide part
50 neck
51 loop
52 water gutter
53 cantilever
54 bars

PATENT CLAIMS

1. Plant protection device in the form of a weather protection extendible over the cultivation including a framework (12) consisting of longitudinal and transverse support elements (13, 14) within which at least one water proof foldable plant protection curtain (16) is extendible from a folded up position and vice versa and which curtain via connectors (29) is hung up in support lines (30) attached to the framework's longitudinal support element (13),
characterised in,
that the curtain (16) is supported or carried along a significant part of its length by movable carrying devices (9) in essentially parallel rows extending along the curtain across the support lines (30), and
that the curtain (16) in its extended position is arranged to form channels (36) between the carrying devices (9).

2. Plant protection device according to claim 1,
characterised in,
that at least some of the carrying devices' (9) being separated by spacers (37) of a shorter length than the channels' arc shaped width in the curtain's extended position.

3. Plant protection device according to claim 1,
characterised in,
that the carrying devices (9) are stretch lines (22) adjustable with respect to the curtain (16) and movably stretched across the support lines (30) between the framework's transverse support elements (14).

4. Plant protection device according to claim 1,
characterised in,
that the carrying devices (9) are bars (54) freely hung in support lines (30) in the framework (12) and to which bars are fastened the upper folding parts of the curtains.

5. Plant protection device according to claim 3,
characterised in,
that the ends of the stretch lines (22) are equipped with friction reducing devices (26), preferably each with a runner, moving in guides (27) placed along the support element (13) of the framework (12).

6. Plant protection device according to claim 1,
characterised in,
that the stretch lines (22) are arranged in or at the upper folding parts (31) of the curtain (16) and/or in the curtain between them, for example in their lower folding parts (32) or asymmetrically relative to the upper folding parts (31).

7. Plant protection device according to claim 3,
characterised in,
that the stretch line's (22) separate from the curtain is attachable to connectors (29b) covering at least a part of the curtain's (16) upper folding part (31), which connectors are shaped to be integrated with the curtain.

8. Plant protection device according to claim 3 or 4,
characterised in,
that said connectors (29) are arranged at the intersection between the support lines (30) and the stretch lines (22).

9. Plant protection device according to claim 6,
characterised in,
that the connectors (29b) are equipped with a recess (47) for firm but longitudinally movable attachment of stretch or reinforcing lines (22).

10. Plant protection device according to claim 9,
characterised in,

that the connectors (29b) are shaped to include cantilevers (53) to transfer pulling forces on the stretch or reinforcing lines (22) to the connector in its assembled position on the curtain.

11. Plant protection device according to claim 1,
characterised in,
that one of the curtain's (16) longitudinal side edges are attached to one of the framework's (22) longitudinal support element (13a) and that the curtain's opposite side edge is fastened to a carrier (33), which by means of a driving mecanism (30, 38) is movable between the longitudinal support elements (13a and 13b).

12. Plant protection device according to claim 1,
characterised in,
that a stationary water gutter (50) is arranged along the second longitudinal support element(13b) of the framework (12) below the extendible curtain so that it forms a water run off, and
that the curtain is arranged so that, in an open position in which a strip narrower that the width of the gutter is opened, together with the gutter it forms a drained ventilation opening.

13. Plant protection device according to claim 1,
characterised in,
that a spacer (37) consisting of a loop rope which includes a continuous series of loops (51) with a distance between them corresponding to the distance between the curtains' upper folding parts (31) when they form channels (36) between them.

14. Foldable curtain as a plant protection for cultivations, which curtain (16) has a high tensile strength in its longitudinal and transverse directions and which via connectors (29) is hung up on a number of support lines (30) stretched across the curtain which curtain is extendible from a folded up position to an extended position and vice versa, whereby the curtain includes a framework (18) consisting of strips or ribbons and/or lines
characterised in,
that the curtain (16) is made of a waterproof laminate and that the curtain is including relative to the curtain movable stretch or reinforcing lines (22) in essentially parallel rows extending

along the curtain's length,
that the curtain is provided with means which in the extended position of the curtain forms channels (36), and
that the stretch line's (22) preferably being integrated in the curtain (16) and arranged in the upper folding parts (31) and/or in the arc shaped part of a curtain channel (36).

15. Plant protection curtain according to claim 14 and of the type that includes ribbons (17) of a flexible material affixed by said framework (18),
characterised in,
that the curtain (16) is covered by a waterproof layer (23) on at least one side forming a laminate which is made by pressing together the at least partially melted covering material and the curtain.

16. Plant protection curtain according to claim 14,
characterised in,
that some of the flexible strips (17) being supplemented with longitudinal stretch or reinforcing lines (22) which strips are shaped to cover the respective stretch line on the side against which the covering material is applied so that the stretch line is freely movable longitudinally in the laminate.

17. Plant protection device according to claim 15,
characterised in,
that the stretch lines' having a surface or being covered by a material which prevents the surface layer from sticking to the stretch lines.

18. Plant protection device according to claim 14,
characterised in,
that the curtain in its length and/or width is provided with electrical resistance wires, which can be plugged into an electric source, the electrical resistance wires preferably being placed in the area around the curtain's intermediate arc shaped part.

FIG. 1

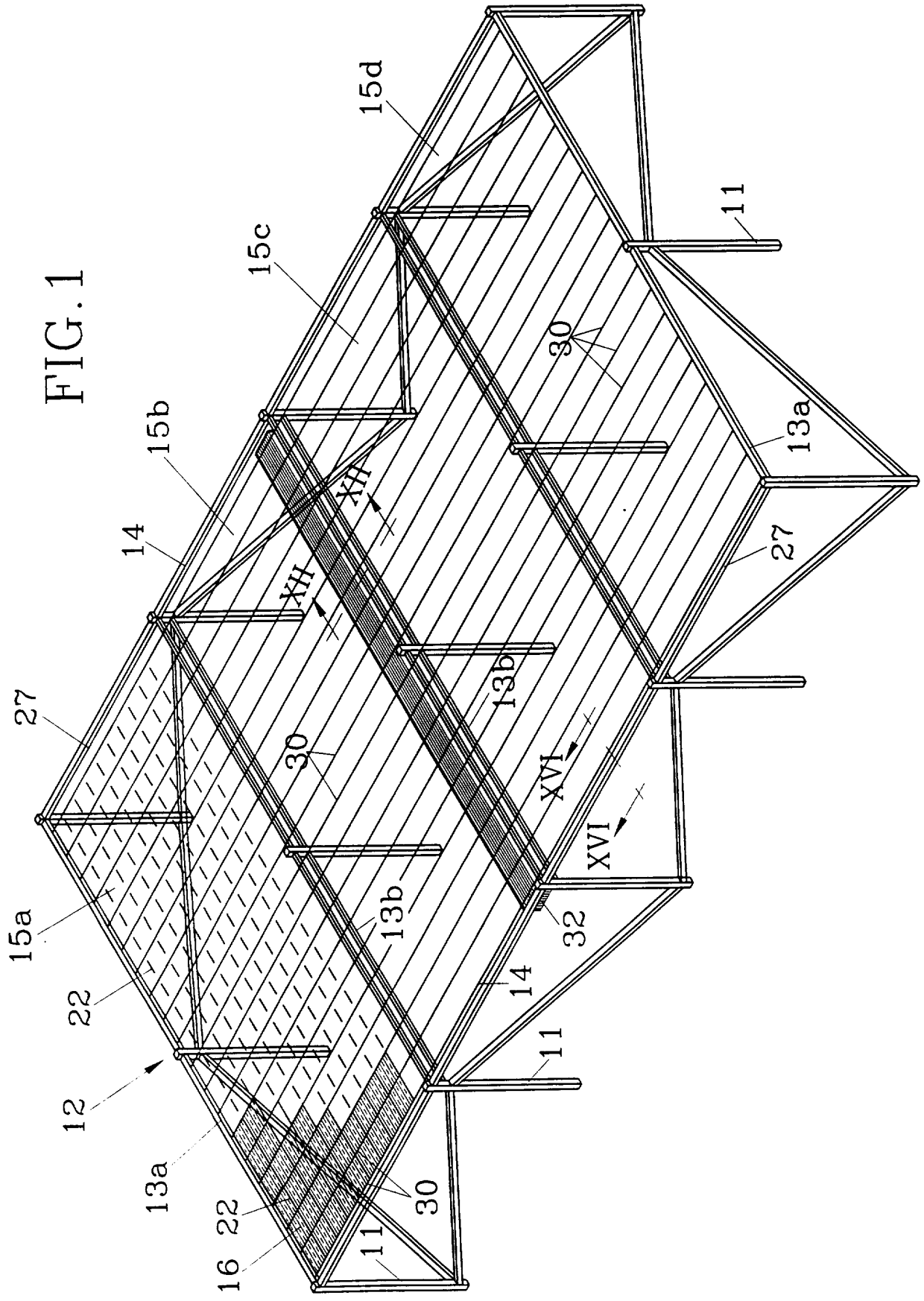
15d
11
15c
30
13a
15b
XII
XII
14
27
13b
27
30
XVI
XVI
15a
13b
32
22
14
11
12
13a
30
22
16
11

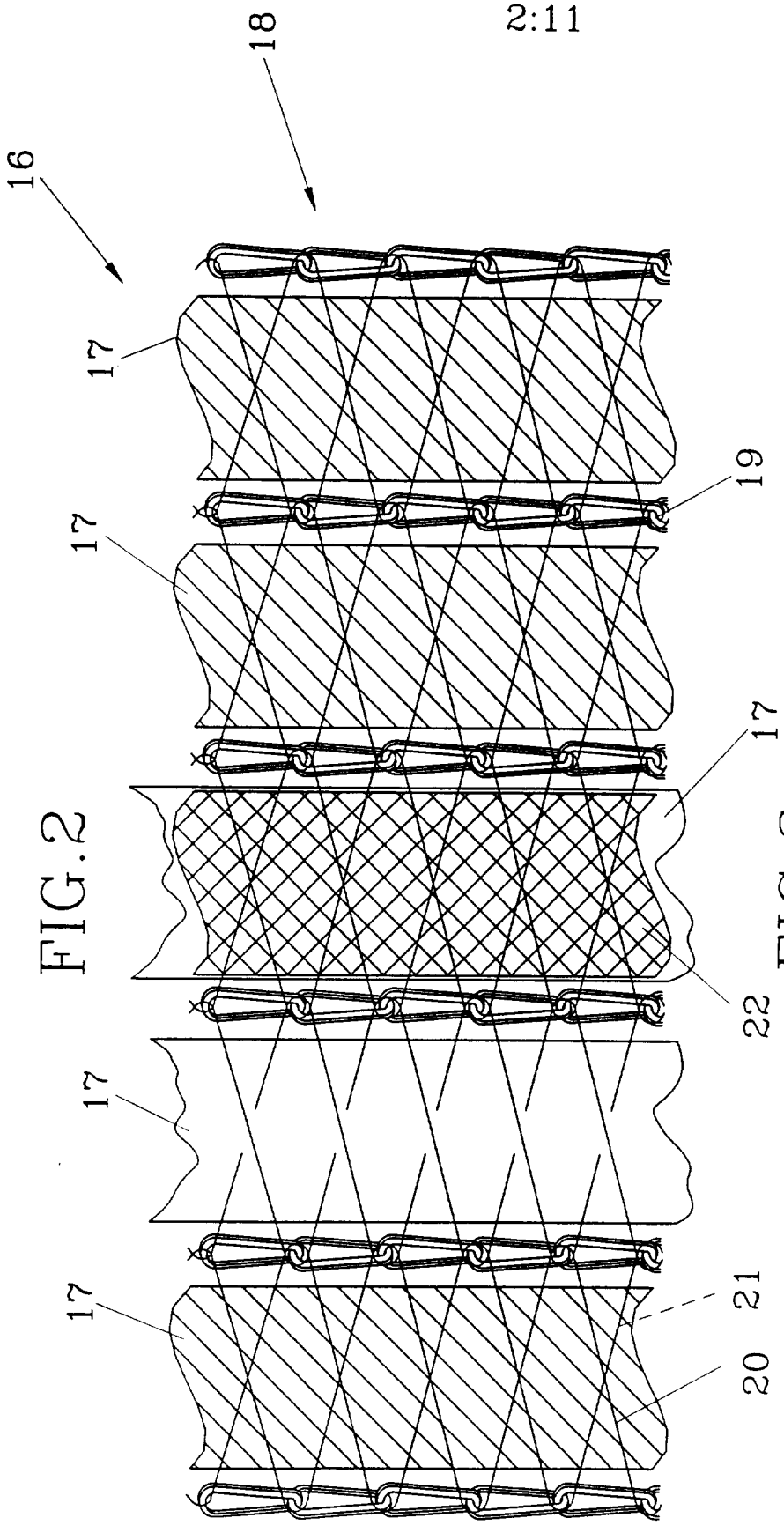
16
18
17
19
17
17
22
17
17
21
20

FIG.2

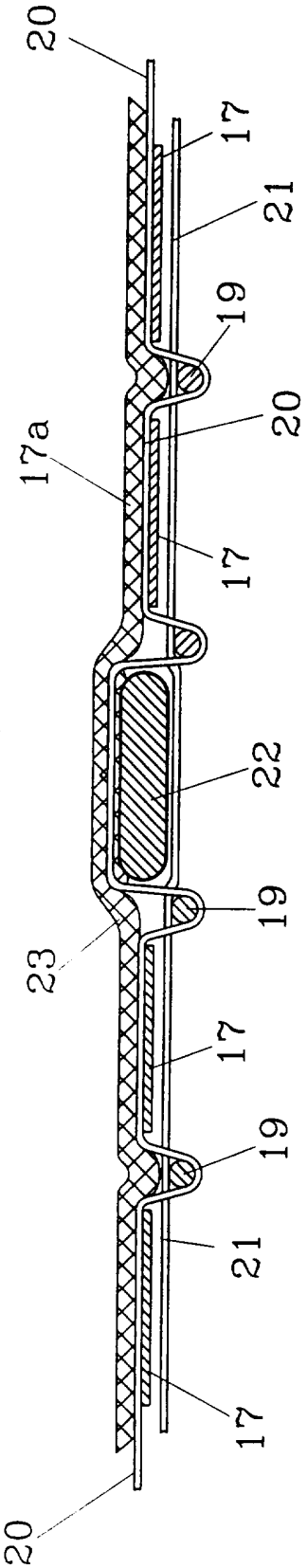
20
17
21
19
20
17a
17
22
19
23
17
19
21
17
20

FIG.3

FIG.4a

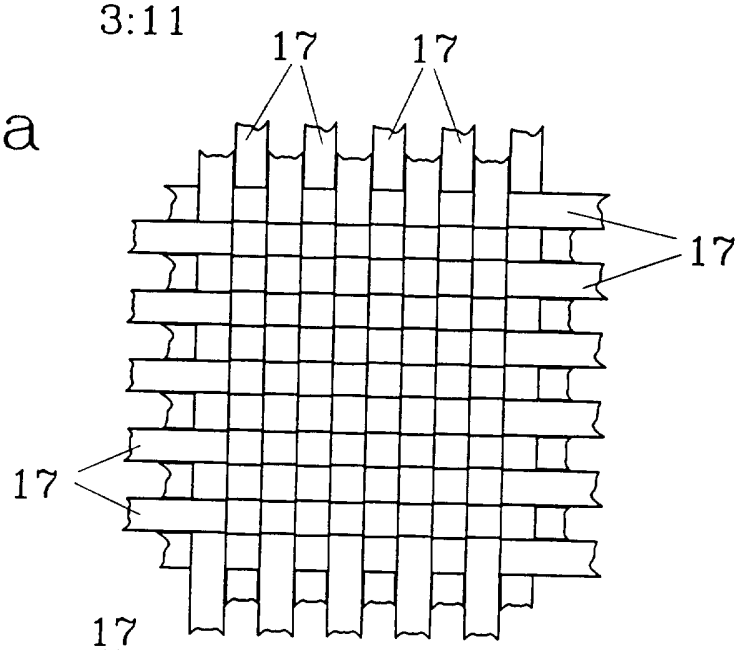

FIG.4b

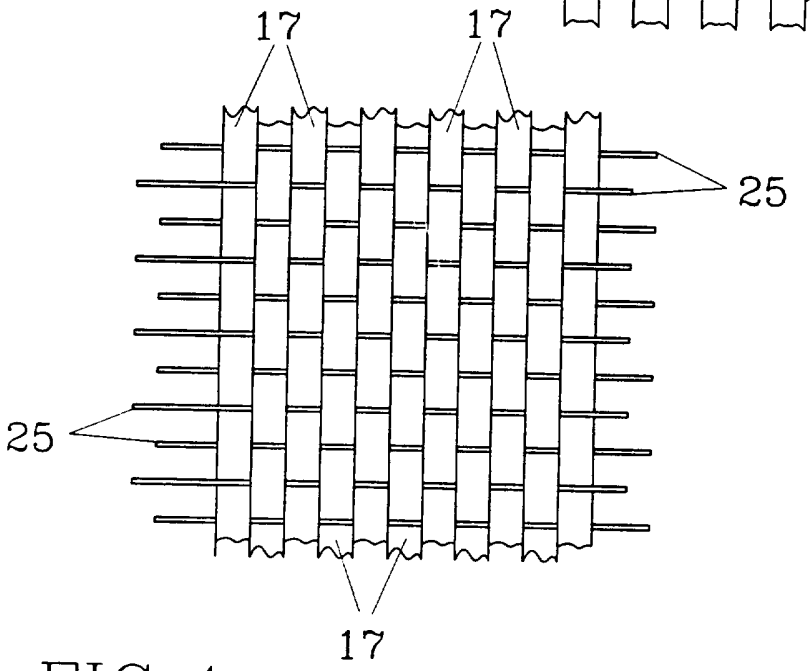

FIG.4c

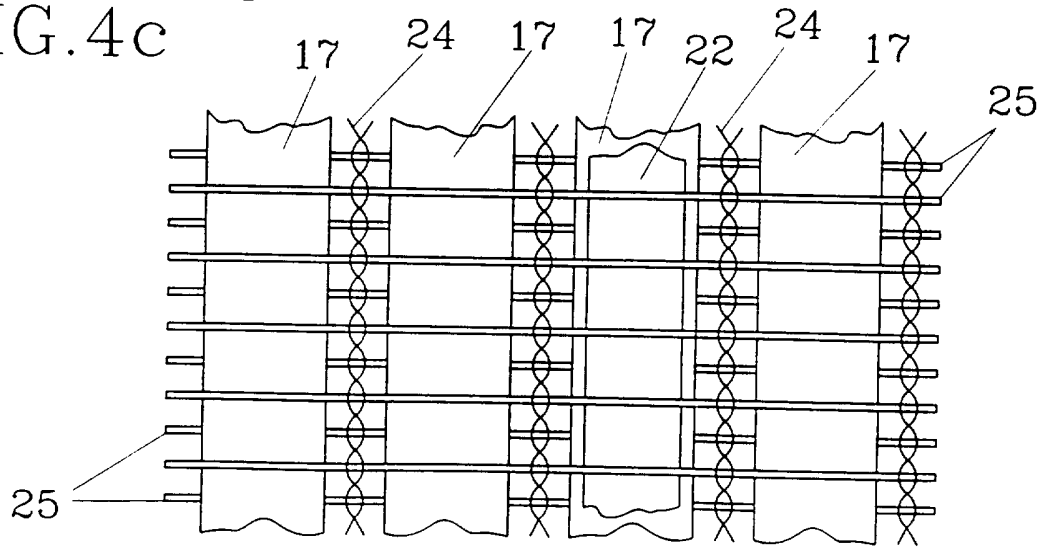

FIG.5

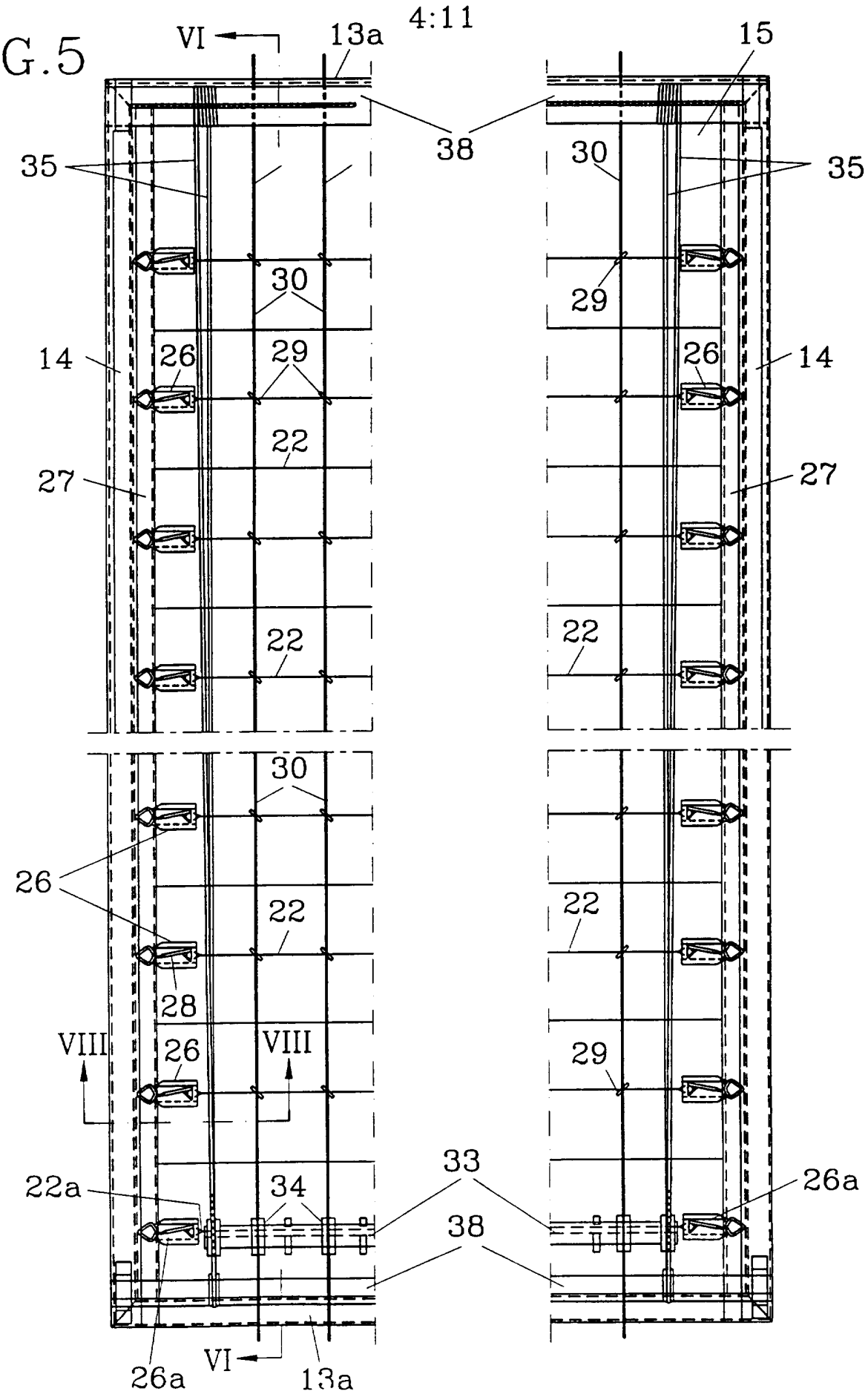
4:11
VI
13a
15
38
35
30
35
30
29
14
26
29
26
14
22
27
27
22
22
30
26
22
22
28
VIII
26
VIII
29
33
22a
34
26a
38
26a
VI
13a

FIG.6

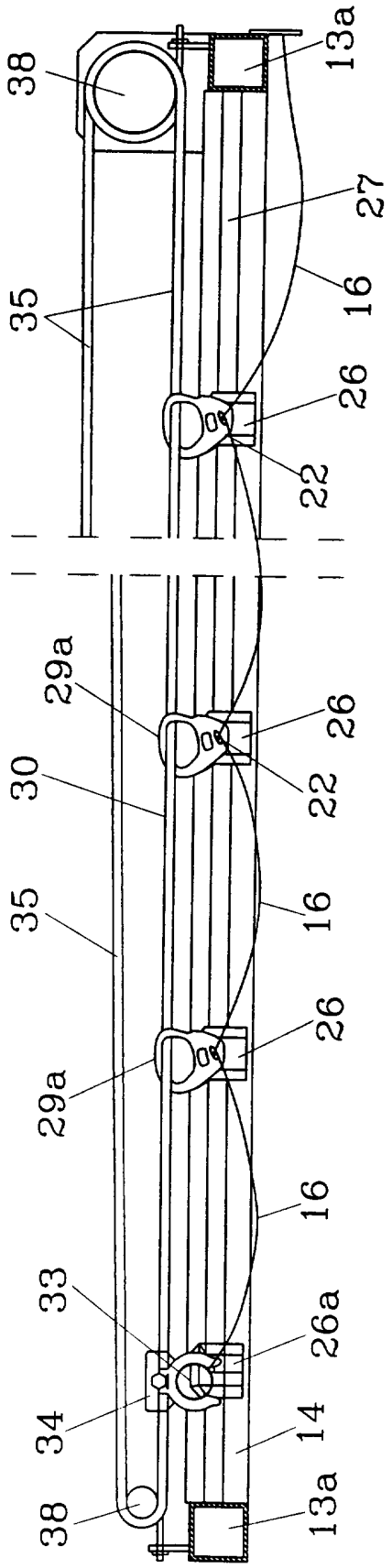

FIG.7

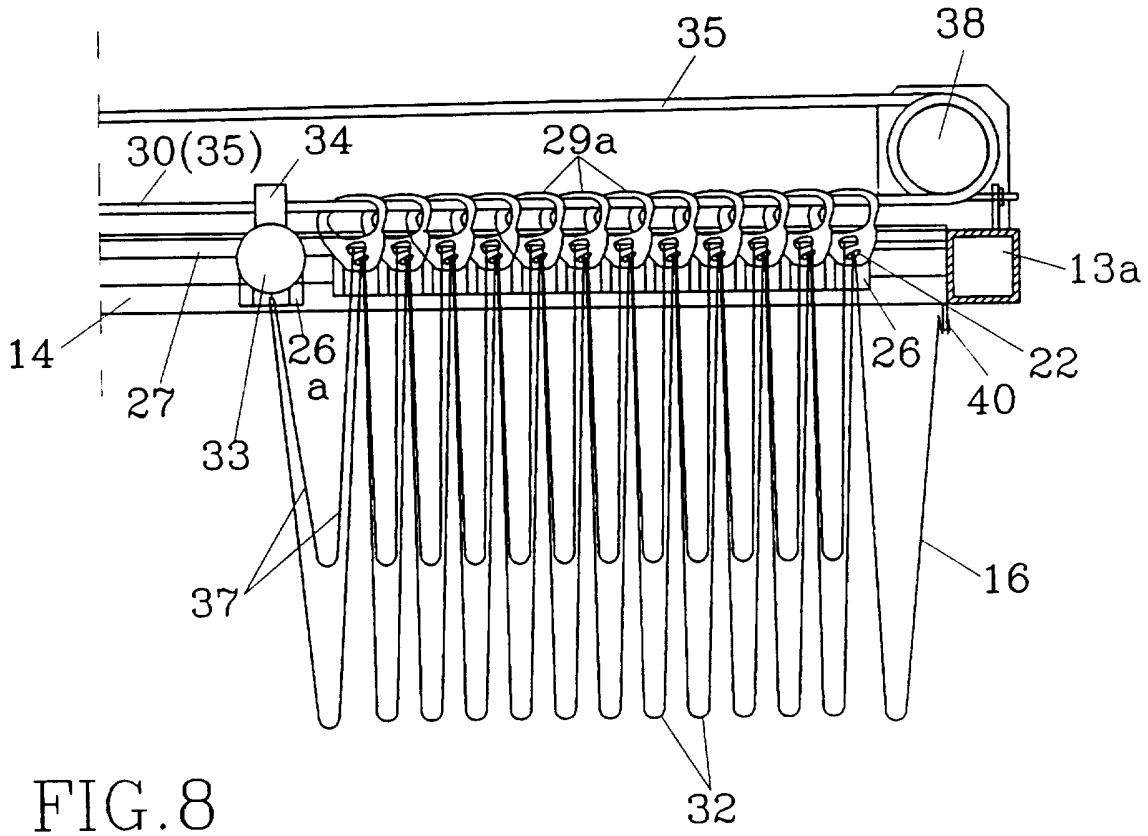
35
38
30(35)
34
29a
13a
14
26
a
26
22
27
40
33
37
16
32

FIG.8

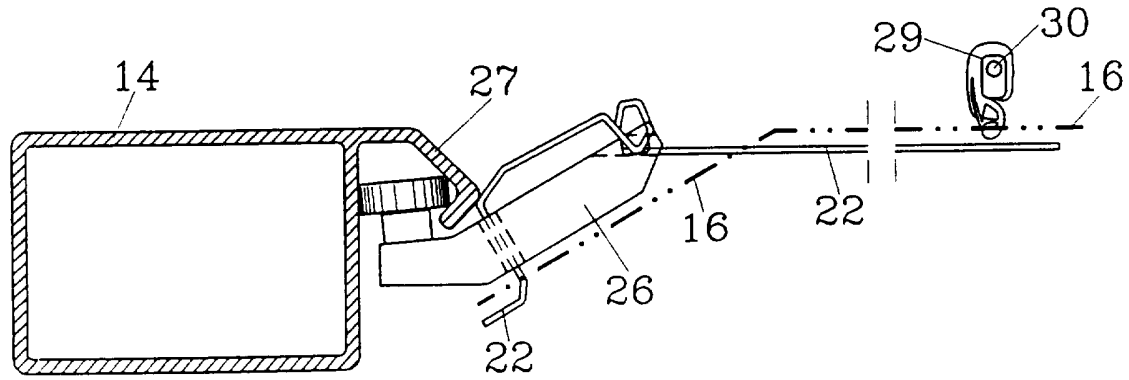
29
30
14
27
16
16
22
26
22

FIG.9

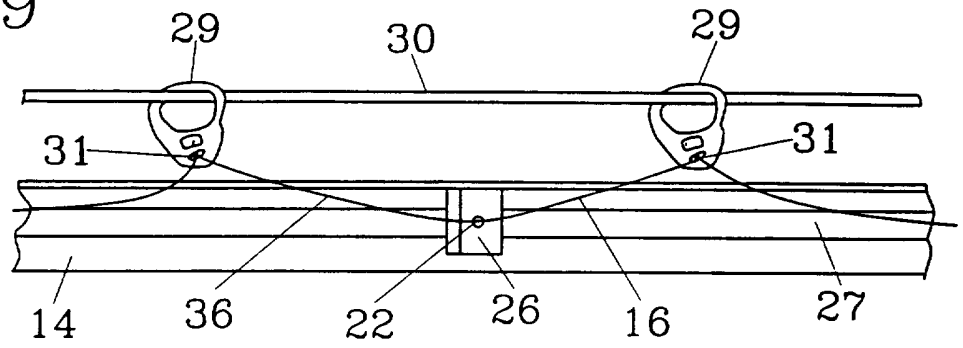

FIG.10

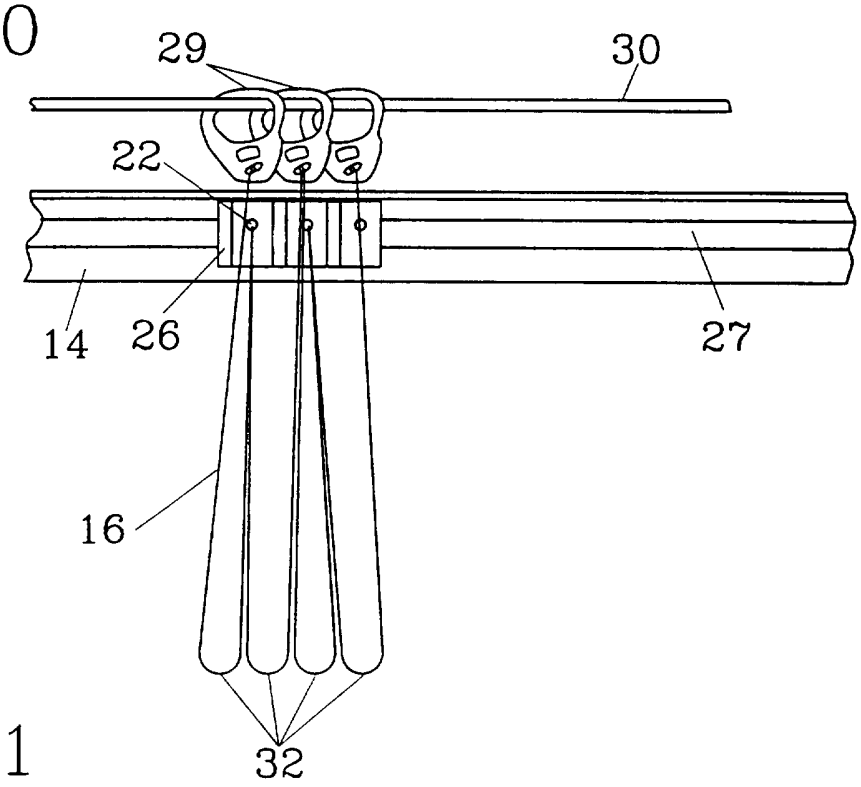

FIG.11

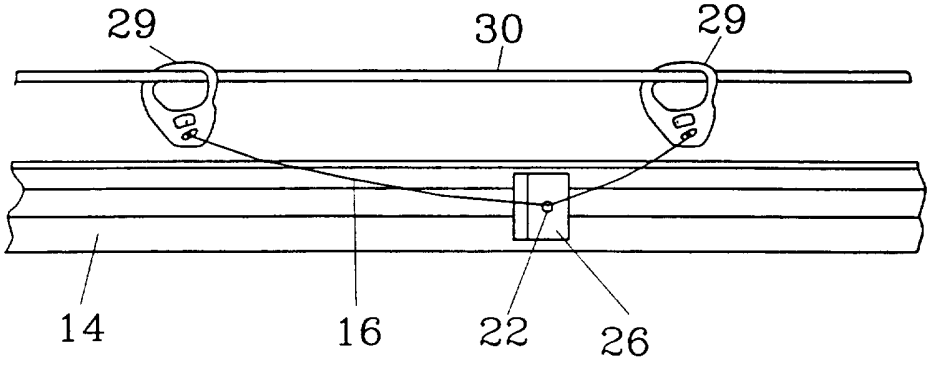

FIG.12

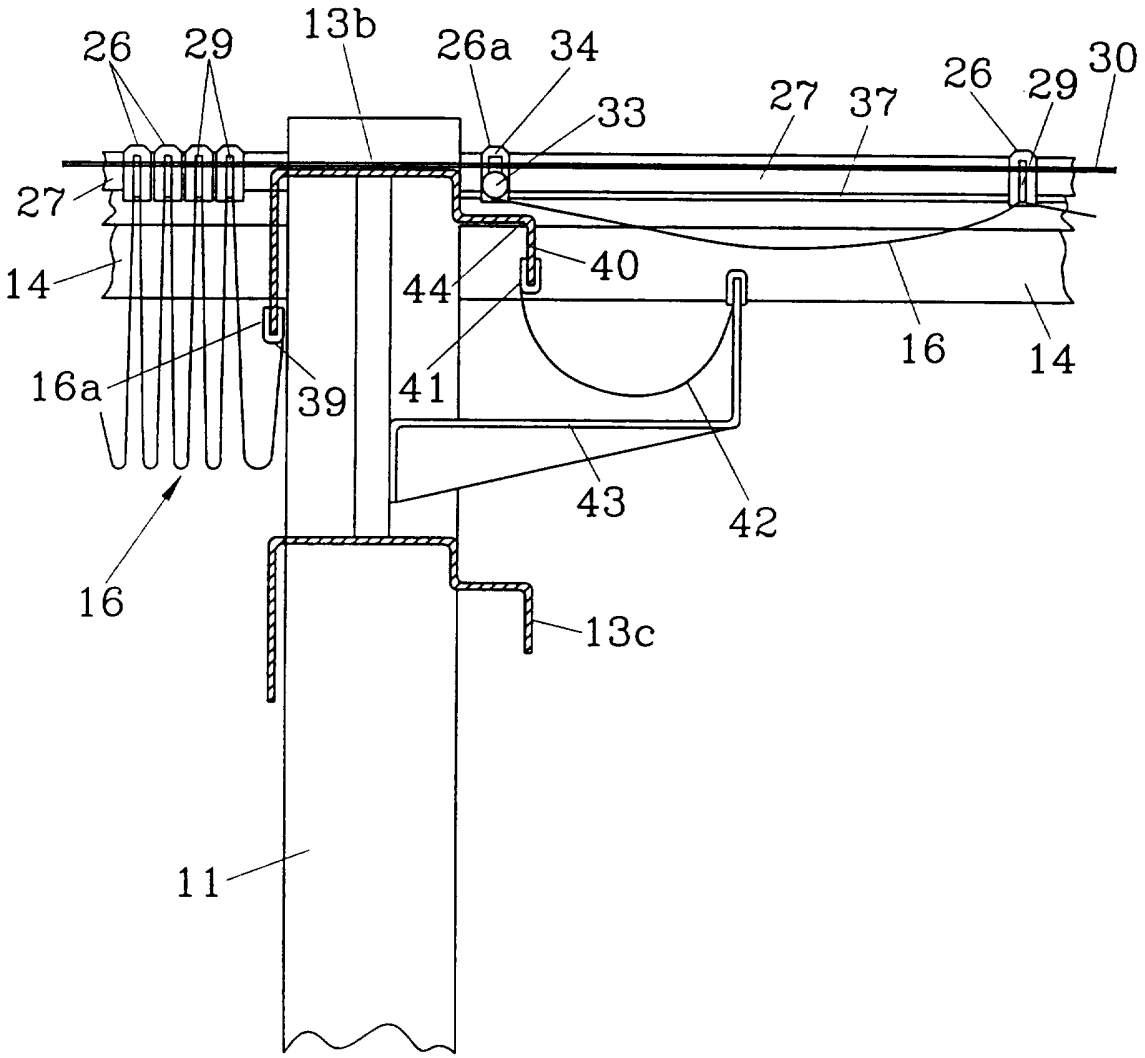
26
29
13b
26a
34
33
27
37
26
29
30
27
14
40
44
16
14
16a
39
41
43
42
16
13c
11

FIG.13

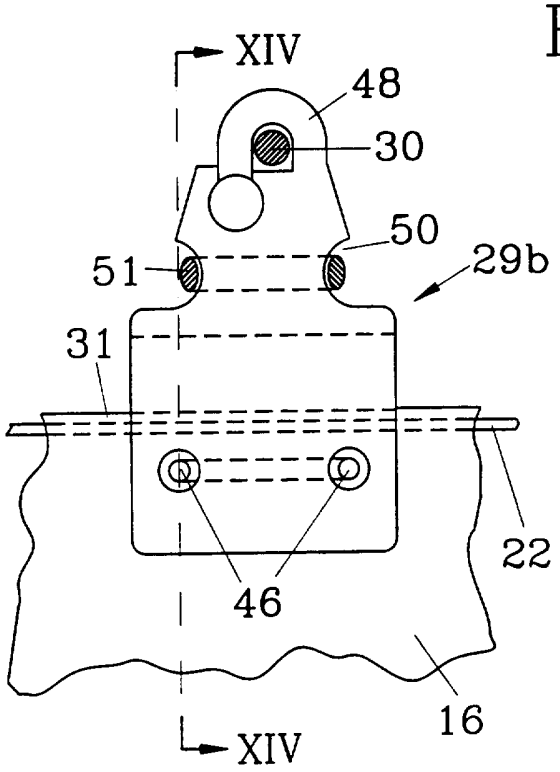

FIG.14

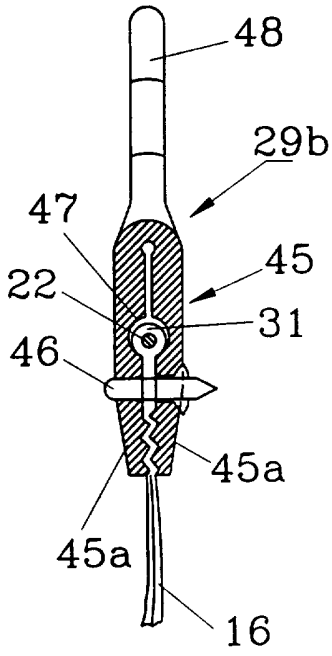

FIG.15

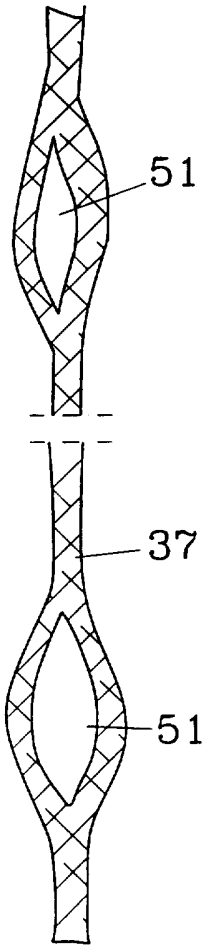

FIG.16

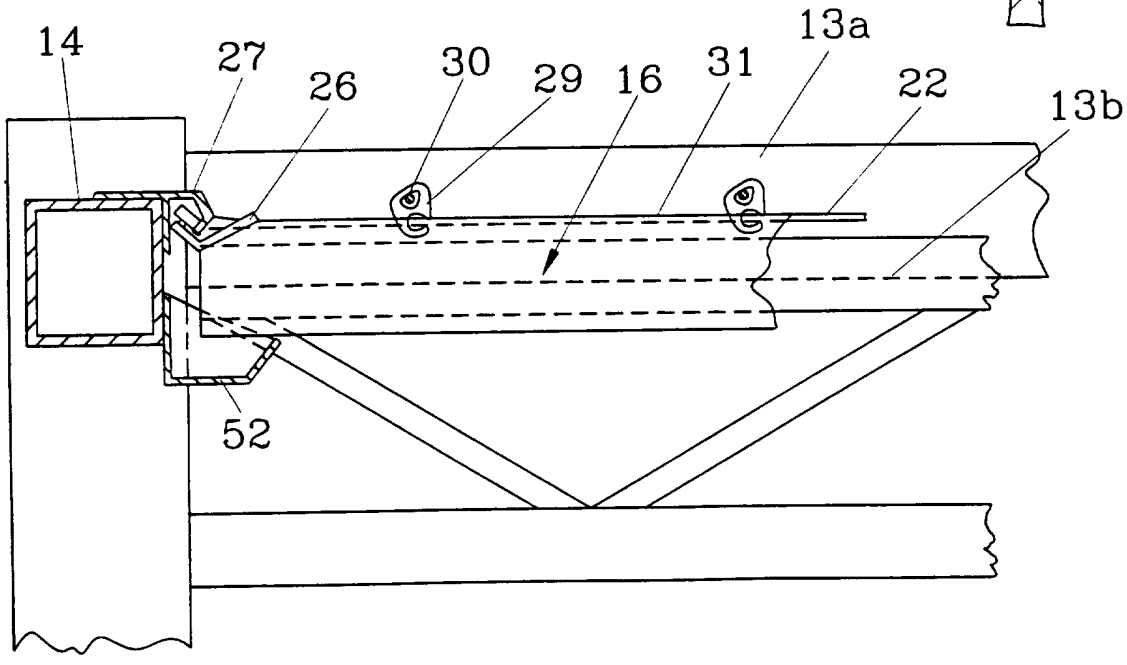

10:11

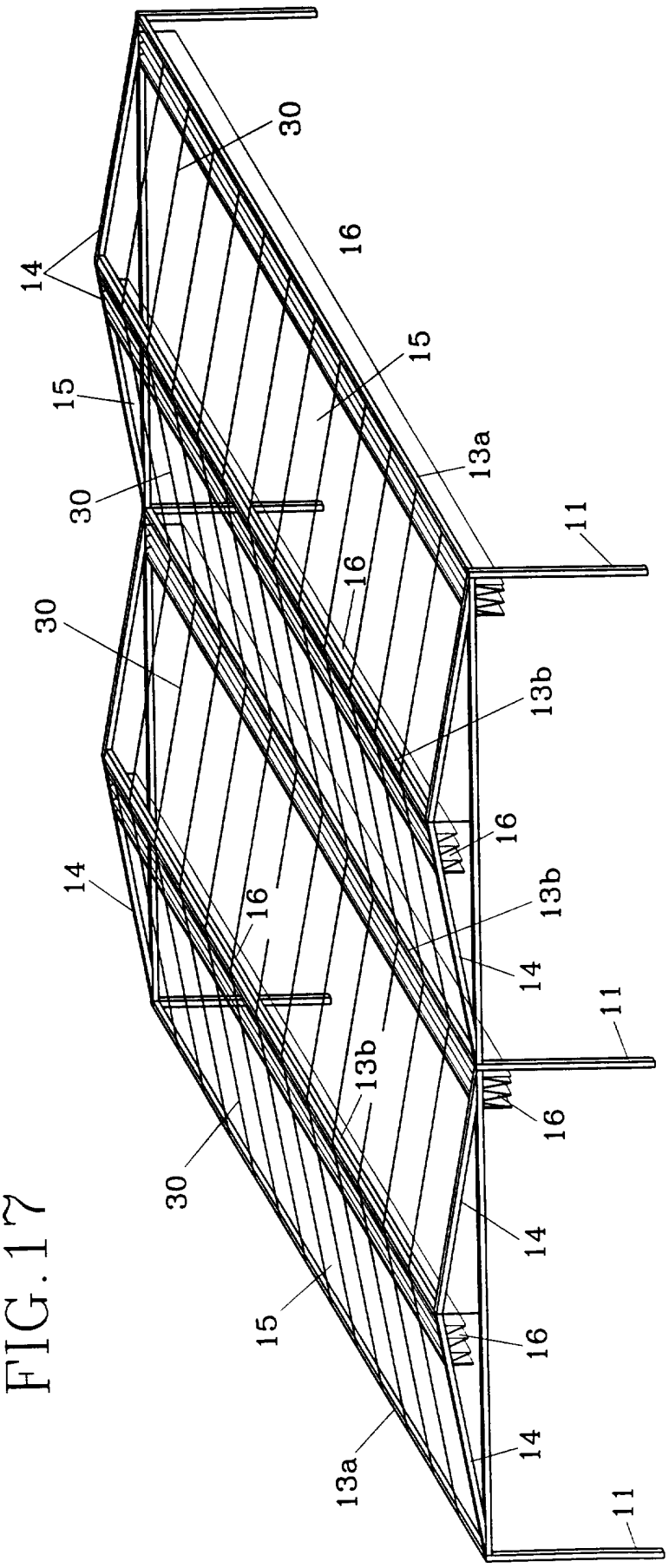
30
16
14
15
15
13a
30
11
16
30
13b
16
14
16
13b
14
11
13b
16
30
14
15
16
13a
14
11

FIG. 17

FIG.18

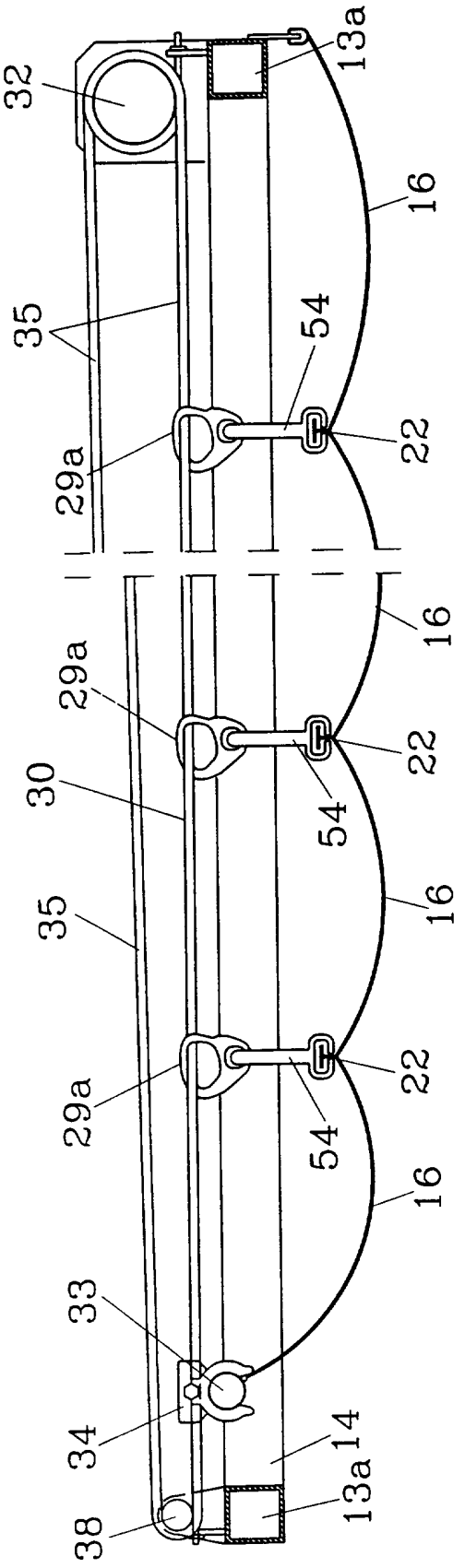
32
13a
16
35
54
22
29a
16
29a
22
30
54
35
16
29a
22
54
16
33
34
14
13a
38

INTERNATIONAL SEARCH REPORT

International application No.
PCT/SE 95/00860

A. CLASSIFICATION OF SUBJECT MATTER

IPC6: A01G 9/22, A01G 9/14
According to International Patent Classification (IPC) or to both national classification and IPC

B. FIELDS SEARCHED

Minimum documentation searched (classification system followed by classification symbols)

IPC6: A01G

Documentation searched other than minimum documentation to the extent that such documents are included in the fields searched

SE,DK,FI,NO classes as above

Electronic data base consulted during the international search (name of data base and, where practicable, search terms used)

C. DOCUMENTS CONSIDERED TO BE RELEVANT

Category*	Citation of document, with indication, where appropriate, of the relevant passages	Relevant to claim No.
A	US 4632863 A (GÖRAN HENNINGSSON), 30 December 1986 (30.12.86), claims 1-6 --	1-18
A	US 4399671 A (GÖRAN HENNINGSSON), 23 August 1983 (23.08.83), claims 1-17 -- --------	1-18

☐ Further documents are listed in the continuation of Box C. ☒ See patent family annex.

* Special categories of cited documents:
"A" document defining the general state of the art which is not considered to be of particular relevance
"E" erlier document but published on or after the international filing date
"L" document which may throw doubts on priority claim(s) or which is cited to establish the publication date of another citation or other special reason (as specified)
"O" document referring to an oral disclosure, use, exhibition or other means
"P" document published prior to the international filing date but later than the priority date claimed
"T" later document published after the international filing date or priority date and not in conflict with the application but cited to understand the principle or theory underlying the invention
"X" document of particular relevance: the claimed invention cannot be considered novel or cannot be considered to involve an inventive step when the document is taken alone
"Y" document of particular relevance: the claimed invention cannot be considered to involve an inventive step when the document is combined with one or more other such documents, such combination being obvious to a person skilled in the art
"&" document member of the same patent family

Date of the actual completion of the international search	Date of mailing of the international search report
6 November 1995	09-11-1995
Name and mailing address of the ISA/ Swedish Patent Office Box 5055, S-102 42 STOCKHOLM Facsimile No. +46 8 666 02 86	Authorized officer INGA-KARIN PETERSSON Telephone No. +46 8 782 25 00

INTERNATIONAL SEARCH REPORT

02/10/95

International application No.
PCT/SE 95/00860

Patent document cited in search report	Publication date	Patent family member(s)	Publication date
US-A- 4632863	30/12/86	AU-B,B- 577033	15/09/88
		AU-B,B- 604315	13/12/90
		AU-A- 1601688	18/08/88
		AU-A- 2208283	04/06/84
		CA-A- 1220031	07/04/87
		EP-A,B- 0109951	30/05/84
		SE-T3- 0109951	
		EP-A- 0141816	22/05/85
		SE-B,C- 436164	19/11/84
		SE-A- 8206399	11/05/84
		SU-A,A- 1487820	15/06/89
		WO-A- 8401969	24/05/84
US-A- 4399671	23/08/83	AU-A- 6438780	28/05/81
		CA-A- 1159760	03/01/84
		EP-A- 0029173	27/05/81
		JP-A- 56088725	18/07/81
		SE-C- 427858	18/08/83
		SE-A- 7909521	20/05/81
		SE-B- 426179	13/12/82
		SE-A- 8001544	29/08/81