A. THOMSON.

MACHINES FOR SHEARING BOILER-PLATES.

No. 193,624. Patented July 31, 1877.

Fig. 1.

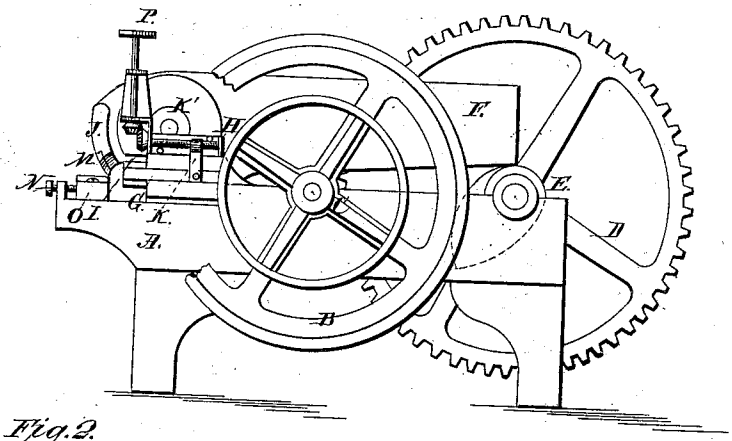

Fig. 2.

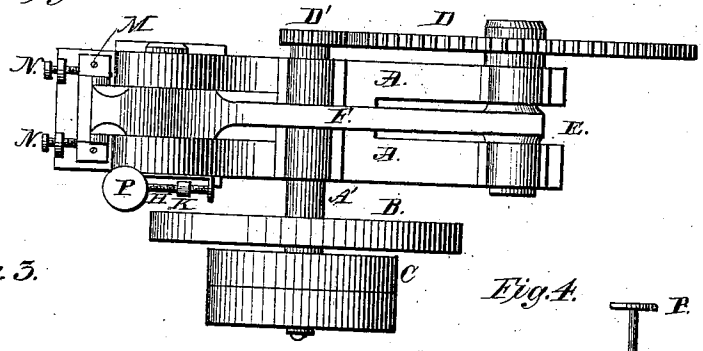

Fig. 3.

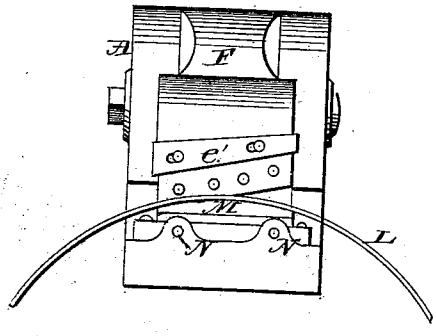

Fig. 4.

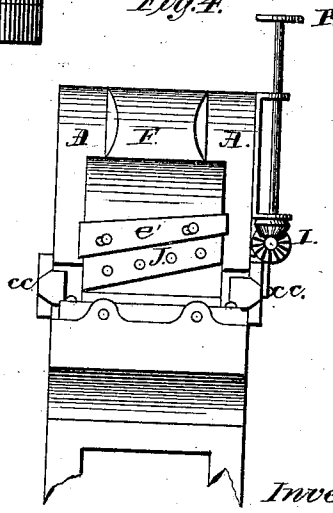

Attest:

L. L. Nerol

A. K. Browne

Inventor:

Alexander Thomson

N. PETERS, PHOTO-LITHOGRAPHER, WASHINGTON, D. C.

UNITED STATES PATENT OFFICE.

ALEXANDER THOMSON, OF FITCHBURG, MASSACHUSETTS.

IMPROVEMENT IN MACHINES FOR SHEARING BOILER-PLATES.

Specification forming part of Letters Patent No. **193,624**, dated July 31, 1877; application filed May 23, 1877.

To all whom it may concern:

Be it known that I, ALEXANDER THOMSON, of Fitchburg, in the county of Worcester and State of Massachusetts, have invented a new and useful Improvement in Boiler-Plate Shears, of which the following is a specification:

The object of my invention is to cut a bevel-edge suitable for calking on iron plates after they are bent or flanged in the shape required in the construction of steam-boilers, tank-work, &c.; and my invention consists of a spirally-shaped shear-blade attached to the arc-shaped end of its operating-lever, in combination with a stationary convex lower blade and gage mechanism, as hereinafter described and claimed.

In the drawings accompanying this specification, Figure 1 is a side elevation of my improved machine; Fig. 2, a plan view; Fig. 3, a front view, and Fig. 4 a front view showing a modified form of the lower shear-blade.

A represents the body or bed-frame of the machine; B, the balance-wheel; C, the driving-pulley; D, the gear; D′, a pinion on the driving-shaft A′ for communicating motion to the gear D, and E the cam (shown by dotted lines) for operating the lever F, to which the spirally-shaped shear-blade J is attached. G is a gage-bar; H, the screw which works in the nut K, and operates the gage-bar; I, the bevel-gears for operating the screw H; M, the stationary convex shear-blade; N, the set-screws for adjusting the block O, to which the stationary blade is attached; L, a section of boiler-head in position on the convex blade and being cut; P, the hand-wheel for operating the bevel-gears I and screw H, which moves the gage-bar that regulates the depth of cut. *e′* is a gib for adjusting the upper shear-blade.

In Fig. 3 the lower shear-blade has a straight edge, and is used when straight work is being sheared, and also when the movable blade operates from within the boiler-head.

The lower blade M is formed with a convex or circular top, and is adapted to fit the under side of a curved plate.

Having thus described my invention, I claim as new and desire to secure by Letters Patent—

The spiral shear-blade I, attached to the arc-shaped end of the pivoted lever F, in combination with the adjustable gage-bar G and adjustable convex stationary shear-blade M, substantially as herein described and set forth.

ALEXANDER THOMSON.

Witnesses:

L. I. O'NEAL,

A. K. BROWNE.