Aug. 7, 1928. 1,679,458

F. L. WILLIAMS ET AL

SLOT MACHINE

Filed Aug. 9, 1926 2 Sheets-Sheet 1

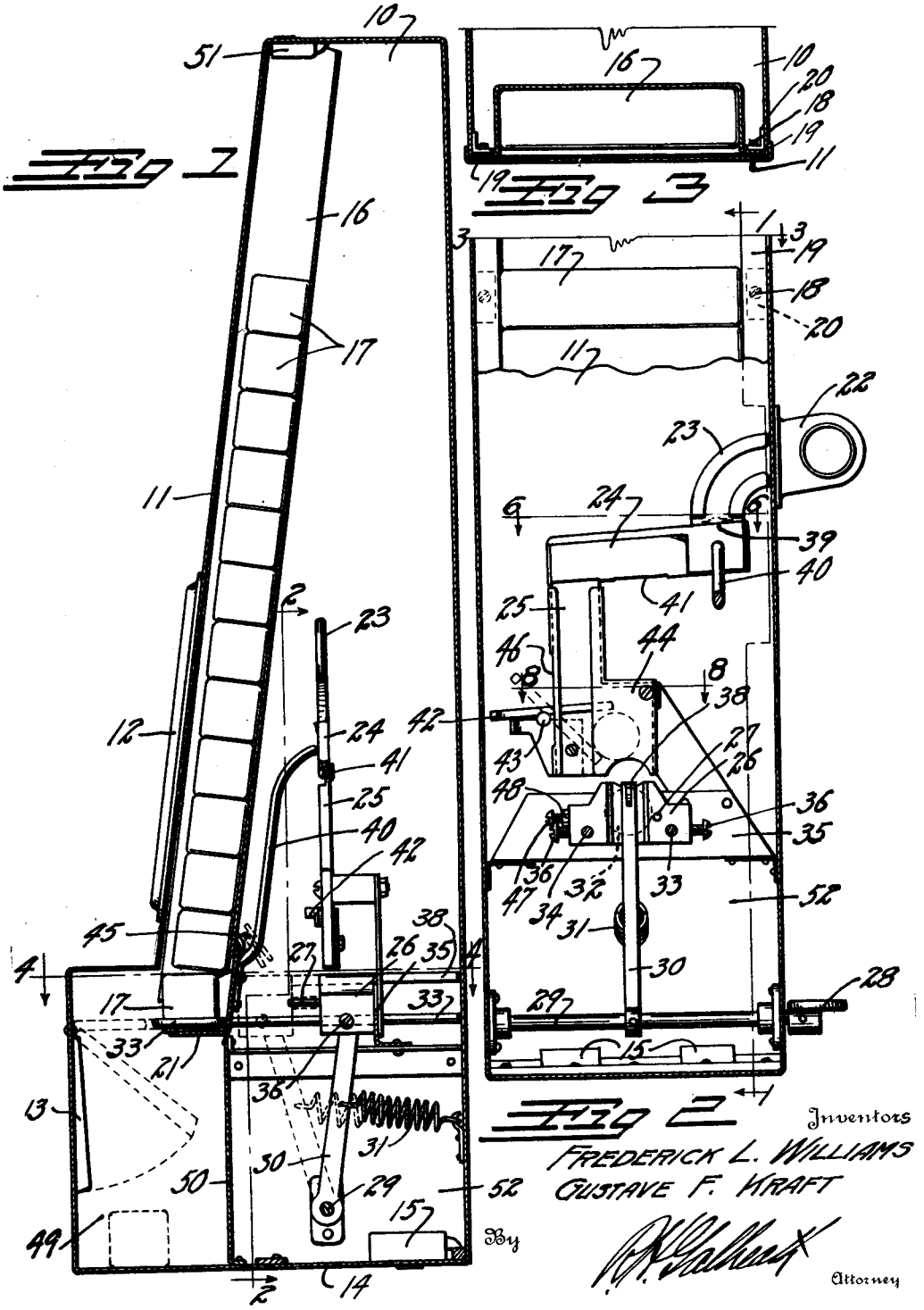

Inventors
FREDERICK L. WILLIAMS
GUSTAVE F. KRAFT
By
Attorney

Aug. 7, 1928. 1,679,458

F. L. WILLIAMS ET AL

SLOT MACHINE

Filed Aug. 9, 1926 2 Sheets-Sheet 2

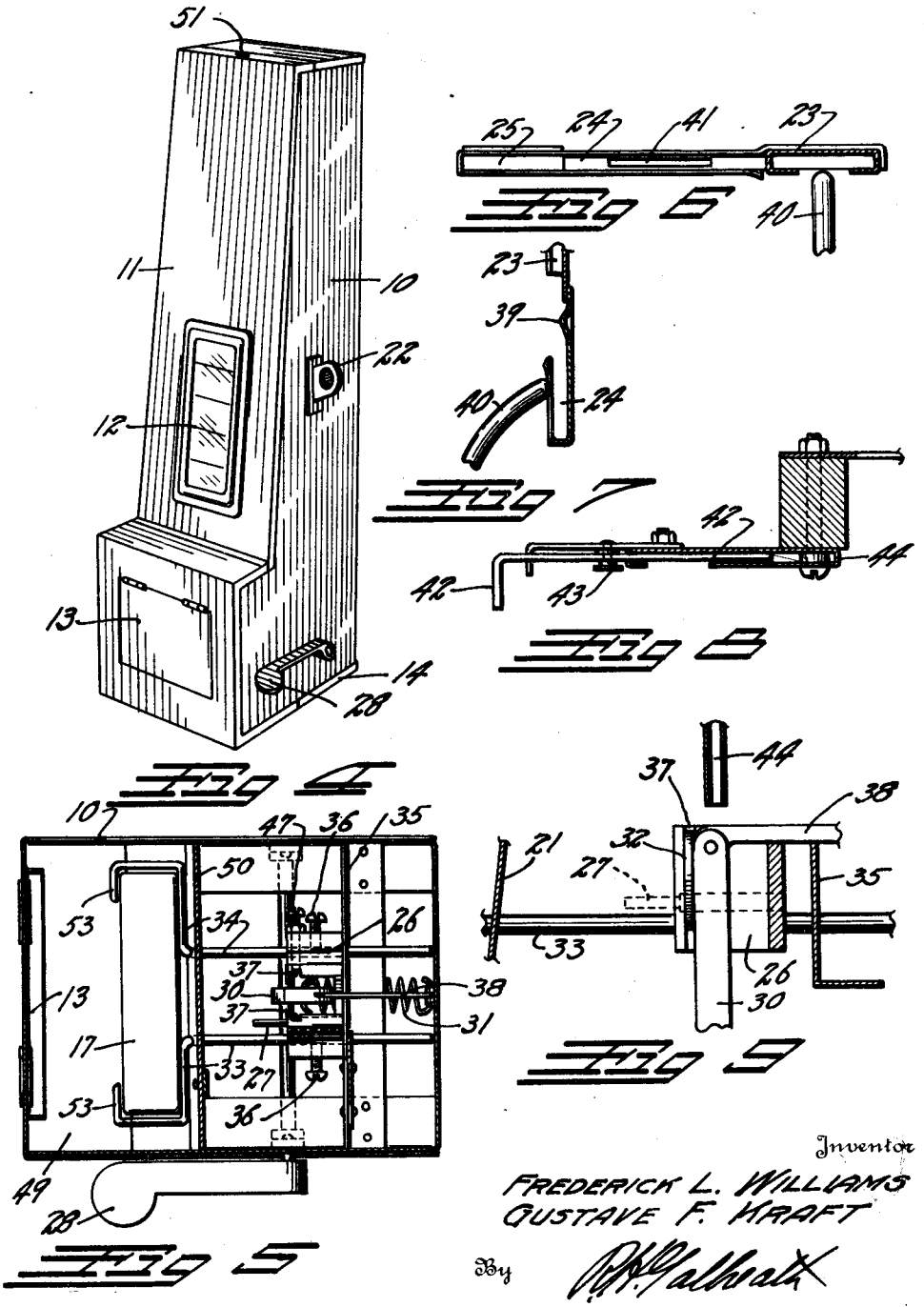

Inventor

FREDERICK L. WILLIAMS
GUSTAVE F. KRAFT

By

Attorney

Patented Aug. 7, 1928. 1,679,458

UNITED STATES PATENT OFFICE.

FREDERICK L. WILLIAMS AND GUSTAVE F. KRAFT, OF KANSAS CITY, MISSOURI.

SLOT MACHINE.

Application filed August 9, 1926. Serial No. 128,133.

This invention relates to a coin-actuated vending machine and has for its principal object, the provision of a machine of this character which will have a simplified mechanism for detecting spurious coins.

Another object of the invention is to so construct the machine that it will have a minimum of moving parts, will be positive in operation and insured against tampering.

Other objects and advantages reside in the detail construction of the invention, which is designed for simplicity, economy, and efficiency. These will become more apparent from the following description.

In the following detailed description of the invention, reference is had to the accompanying drawing which forms a part hereof. Like numerals refer to like parts in all views of the drawing and throughout the description.

In the drawing:

Fig. 1 is a vertical section through the invention, taken on the line 1—1, Fig. 2.

Fig. 2 is a vertical section, taken on the line 2—2, Fig. 1.

Fig. 3 is a detail cross section through the package chute.

Fig. 4 is a perspective view of the complete device.

Fig. 5 is a horizontal section taken on the line 4—4, Fig. 1.

Fig. 6 is an enlarged detail plan view illustrating the horizontal portion of the coin receiving channel, taken on the line 6—6, Fig. 2.

Fig. 7 is a detail vertical section through the lower extremity of the vertical coin channel.

Fig. 8 is an enlarged detail cross section through the vertical portion of the coin channel, taken on the line 8—8, Fig. 2.

Fig. 9 is an enlarged detail vertical section through the coin block, illustrating the operation thereof.

The invention comprises a housing 10 provided with a removable front cover 11 carrying a transparent window 12. A vertical partition 50 divides the lower portion of the housing into a package compartment 49 and a cash compartment 52. In front of the package compartment 49 is a vertically swinging door 13 through which the articles are removed. In the bottom of the cash compartment 52 is a cash removal door 14, maintained in place by a lock 15. The front cover 11 is removable and is held in place by means of a lock 51. An inclined package chute 16 is placed immediately behind the front cover 11 and carries the articles, being dispensed. The chute 16 is maintained in place by means of screws 18 which pass through flanges 19 on the chute into ears 20 carried by the housing 10 so that it may be readily removed to gain access to the operating mechanism. The chute 16 terminates at its bottom in an angle-shaped shelf member 21 upon which the pile of packages 17 rests.

Through the side of the housing 10 a coin receiver 22 communicates with an arcuate coin channel 23. A substantially horizontal coin channel 24 receives the coins from the channel 23 and deposits them in a vertical channel 25, from which, they drop into a coin block 26. The coin block 26 is provided with vertical grooves 37 arranged to be engaged by opposite edges of the coin. A retaining pin 27 passes through one of the grooves 37 and an adjusting screw 47 in the coin block 26 enters the other groove 37. The coin is supported between the screw 47 and the pin 27 in the grooves 37 so that it will form a medium for actuation of the block.

The actuation is accomplished by means of a hand lever 28 on the exterior of the housing 10 arranged to rotate a shaft 29 passing through the coin compartment 52. The shaft 29 carries a vertical lever 30 which is constantly pulled rearwardly by a tension spring 31, and which, when moved forwardly, engages the coin indicated at 32 to cause it to pull the coin block 26 forwardly with the movement of the hand lever 28. The coin block 26 is secured on package rods 33 and 34 which pass through the angle member 21 and partially surround each end of the lowermost package 17. The rearward extremities of the package rods 33 and 34 are carried in an angle plate 35 which extends across the width of the housing 10. The coin block 26 is locked on the rods 33 and 34 by means of set screws 36, by means of which, the position of the coin block on the rods may be adjusted.

In broken line in Fig. 9, the outline of the retaining pin 27 is indicated. It will be noted that the rearward portion of the pin is of greater diameter than the forward portion. The pin is slidable in the block 26 and when the block is in its rearmost position, the rearward extremity of the pin 27 will engage the angle member 35 which will

force the pin forwardly to the broken line position of Fig. 9. In this position, the coin which enters the block 26 in coin grooves 37 will be prevented from falling through the block by the greater diameter of the pin 27. As the block is moved forwardly by the action of the lever 30 on the coin 32, it will force the rods 33 and 34 forwardly until they push the package 17 from the angle member 21 allowing it to fall to the bottom of the package compartment 49. At this time the forward extremity of the pin 27 will engage the angle member 21 which will force the pin rearwardly into the block and bring the smaller diameter opposite the coin allowing it to fall from the coin grooves 37 into the bottom of the coin compartment 52. Pivoted at the upper extremity of the lever 30 is a sliding bar 38 which holds coins in the vertical coin channel 25 until the coin block reaches its rearmost or operative position. The sliding bar 38 is maintained horizontal by the angle member 35 upon which it slides.

The receiving end of the horizontal channel 24 is open at its forward side. Immediately above this open side a slight projection or bump 39 is formed in the channel. This bump acts to knock the coins forwardly as they enter the open end of the channel 24. The coins are prevented from falling from the channel by a tongue 40 which terminates immediately in front of this open section, as shown in Fig. 2. This construction is for the purpose of removing washers and other open-centered slugs which may be placed in the machine. In the bottom of the horizontal channel 24 a relatively narrow slot 41 is formed, over which, the coins must travel before reaching the vertical channel 25. This slot is for the purpose of removing spurious coins which are thinner than the standard coin from the channel.

Adjacent the bottom of the vertical channel 25 an opening 46 is formed in the channel edge. At the bottom of this opening a balanced lever 42 is pivoted on a pivot pin 43, one arm of this lever extends into and across the vertical channel 25. In its natural position, the balanced lever 42 is inclined downwardly to the left but when impinged by a coin of the proper weight it will tip downwardly to the right, as shown in broken line in Fig. 2, directing the coins into an enlarged portion 44 of the vertical channel, from which, they fall into the coin grooves 37 of the coin block 26. The balanced lever is for the purpose of removing coins lighter than the standard coins from the coin channels.

Let us assume that a spurious coin, such as an iron washer, is dropped into the coin receiver 22. It will roll into the arcuate channel 23, strike the bump 39 and be thrown forwardly over the tongue 40, down which, it will slide to the position indicated at 45, Fig. 1, without operating the machine. Should a thin circular tag, such as commonly employed upon chewing tobacco etc., be dropped into the coin receiver, it would roll down the arcuate channel 23 over the bump 39 and be maintained in place in the channel by the tongue 40. It would then roll to the left along the horizontal channel 24 until it reached the slot 41 through which it would drop to the bottom of the housing 10 without operating the mechanism. Should a circular disk, of the proper diameter and thickness but of a lighter metal than the standard coin, be dropped into the coin receiver 22, it would roll past the tongue 40, over the slot 41 and fall into the vertical channel 25 upon the lever 42. Since it is of a lighter metal than that the machine is designed to receive, it would not be able to force this lever to a downwardly inclined position and would therefore roll to the left along the lever through the slot 46, in the side of the vertical channel 25, and fall to the bottom of the housing 10, without operating the machine. Should a spurious coin of slightly less diameter, but of the proper weight and thickness and without a central opening be dropped into the coin receiver, it would pass all of the detecting features, operate the balanced lever 42 and enter the coin grooves 37 of the coin block. However, since the distance between the retaining pin 27 and the adjusting screw 47 is adjustable within a very few thousandths of an inch to the standard coin width, it will drop past the screw 47 and the pin 27 into the bottom of the housing without operating the machine. The opening in the coin receiver will not admit a coin larger than the standard diameter.

Now let us assume that a coin for which the machine is designed is put in the coin receiver 22. It will drop to the horizontal channel 24 but cannot fall through the side thereof since it has no central opening to receive the tongue 40. It will not fall through the slot 41 since it is too thick to enter this slot. It will have sufficient weight to force the balanced lever 42 to the broken line position of Fig. 2 and be directed into the coin grooves 37. Its width will prevent it from passing the retaining pin 27 and the adjusting screw 47 so that it will come to rest at the broken line position in Fig. 2 and solid line position in Fig. 7. If the operating lever 28 is now depressed, it will bring the forward face of the lever 30 into contact with the rear face of the coin causing the coin to transmit the motion of the lever to the coin block and from it to the package rods 33 and 34. The package rods will force the package forwardly over the edge of the angle shelf member 21 allowing it to drop to the bottom of the receiving com-

partment 49 from which it may be removed by the customer through the door 13.

It is desired to call attention to the fact that a party may be employed to refill the package chutes 16 without giving him access to the money compartment 52. When he has unlocked the lock 51 and removed the forward face 11 he is prevented from reaching the interior of the machine by the package chute 16. Should he go to the extent of unscrewing the screws 18 and removing the package chute he still is unable to reach the money because of the operating mechanism located immediately above the money compartment 52. It is also desired to call attention to the fact that the packages cannot be reached by an unauthorized customer for should he reach into the receiving compartment 49, the door 13 will swing inwardly, preventing access to the stack of packages thereabove. Inwardly bent extremities 53 on the package rods 33 and 34 prevent the package from being jarred or tilted from the shelf 21.

While a specific form of the improvement has been described and illustrated herein, it is desired to be understood that the same may be varied, within the scope of the appended claims without departing from the spirit of the invention.

Having thus described the invention, what we claim and desire secured by Letters Patent is:—

1. In a dispensing device having an open sided shelf for supporting a pile of packages; a pair of bent rods slidably mounted in said device one extremity of each of said rods adapted to partially surround the lower-most package upon said shelf the other extremities of said rods being parallel; a coin block supported between the parallel portions of said rods and adjustably secured thereto, said coin block being U shaped in plan and provided with co-acting grooves in the interior face of the opposite sides of said U to receive the edges of said coin; a lever operable from the exterior of said device and arranged so that its free extremity projects between the sides of said U, so as to contact with the coin in said grooves; a coin chute terminating above said grooves when said slidable rods are in one position and a bar secured to said lever so as to travel therewith and prevent the exit of coins from said coin chute when said grooves are moved away therefrom.

2. In a dispensing device having an open sided shelf for supporting a pile of packages; a pair of bent rods slidably mounted in said device one extremity of each of said rods adapted to partially surround the lower-most package upon said shelf the other extremities of said rods being parallel; a coin block supported between the parallel portions of said rods and adjustably secured thereto, said coin block being U-shaped in plan and provided with co-acting grooves in the interior face of the opposite sides of said U to receive the edges of said coin; a lever operable from the exterior of said device and arranged so that its free extremity projects between the sides of said U so as to contact with the coin in said grooves; a coin chute terminating above said grooves when said slidable rods are in one position and a bar secured to said lever so as to travel therewith and prevent the exit of coins from said coin chute when said grooves are moved away therefrom, said bar being pivoted to said lever and adapted to rest on said coin block.

3. In a dispensing device having an open sided shelf for supporting a pile of packages; a pair of bent rods slidably mounted in said device one extremity of each of said rods adapted to partially surround the lower-most package upon said shelf the other extremities of said rods being parallel; a coin block supported between the parallel portions of said rods and adjustably secured thereto, said coin block being U-shaped in plan and provided with co-acting grooves in the interior face of the opposite sides of said U to receive the edges of said coin; a lever operable from the exterior of said device and arranged so that its free extremity projects between the sides of said U so as to contact with the coin in said grooves; a coin chute terminating above said grooves when said slidable rods are in one position and a bar secured to said lever so as to travel therewith and prevent the exit of coins from said coin chute when said grooves are moved away therefrom, and cross members in said device adapted to slidably receive said bars and maintain their extremities in horizontal parallel relation.

In testimony whereof, we affix our signatures.

FREDERICK L. WILLIAMS.
GUSTAVE F. KRAFT.