(No Model.) 2 Sheets—Sheet 1.

J. P. HUSSEY.

WATER MOTOR.

No. 340,120. Patented Apr. 20, 1886.

Fig. 1.

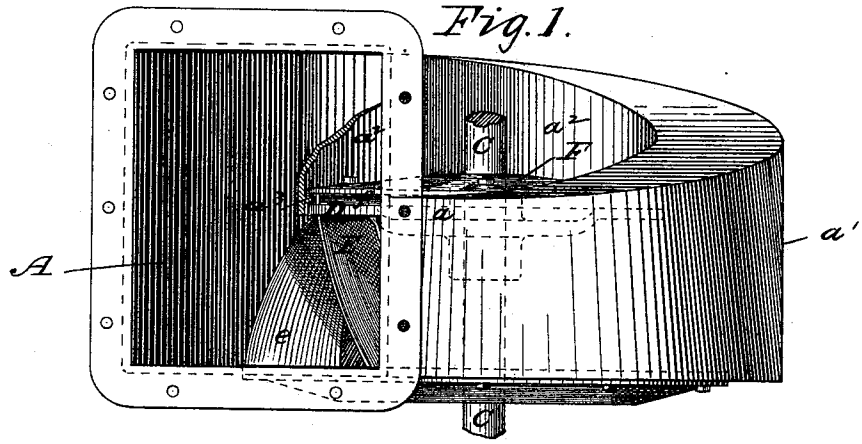

Fig. 2.

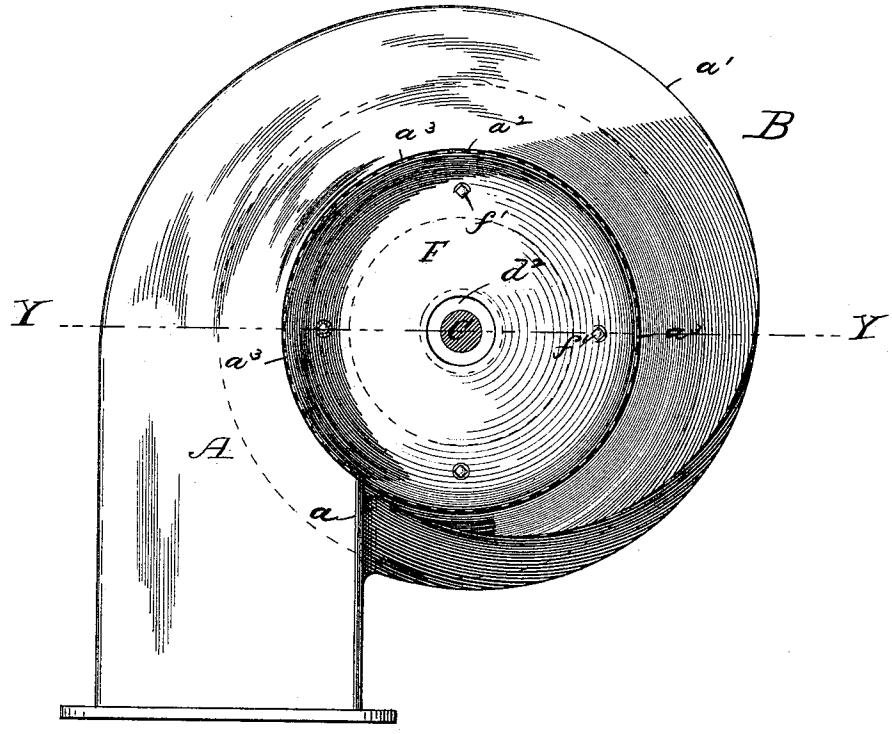

Witnesses.
W. B. Hill.
F. A. Mencke

Inventor
J. P. Hussey
per. J. B. Thurston
Attorney

N. PETE...S. Photo-Lithographer, Washington, D. C.

(No Model.) 2 Sheets—Sheet 2.

J. P. HUSSEY.

WATER MOTOR.

No. 340,120. Patented Apr. 20, 1886.

Fig. 3.

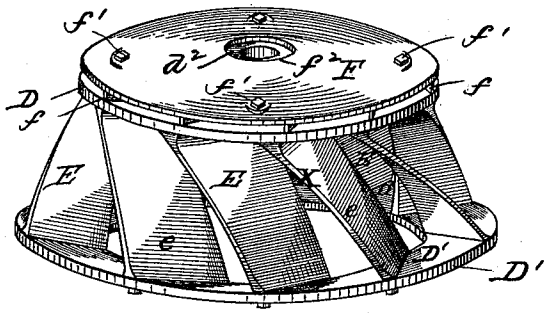

Fig. 4.

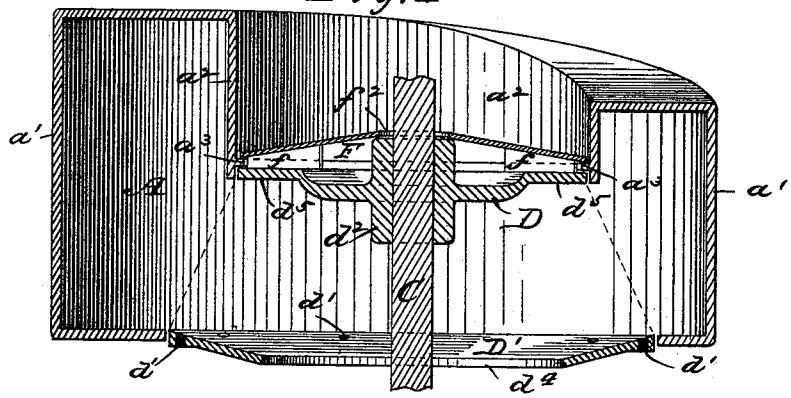

Fig. 5.

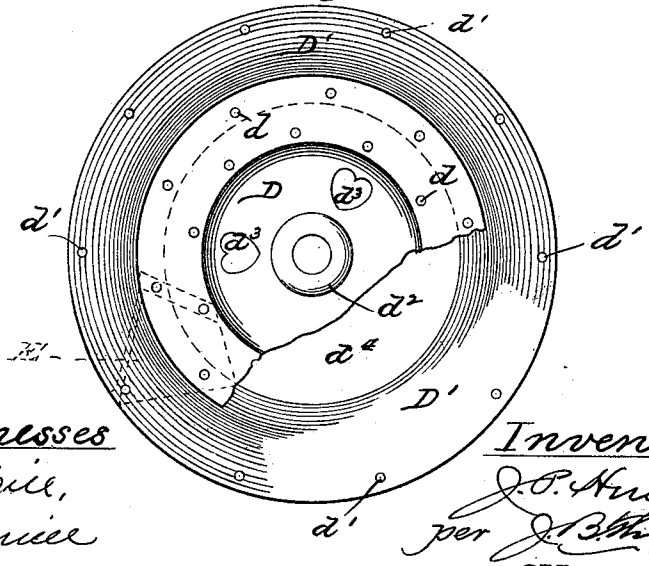

Witnesses
W. B. Hill,
F. A. Mericle

Inventor.
J. P. Hussey
per J. B. Thurston
Attorney

N. PETERS. Photo-Lithographer, Washington, D. C.

UNITED STATES PATENT OFFICE.

JOHN P. HUSSEY, OF GILMANTON IRON WORKS, NEW HAMPSHIRE.

WATER-MOTOR.

SPECIFICATION forming part of Letters Patent No. 340,120, dated April 20, 1886.

Application filed October 23, 1885. Serial No. 180,696. (No model.)

To all whom it may concern:

Be it known that I, JOHN P. HUSSEY, a citizen of the United States, residing at Gilmanton Iron Works, in the county of Belknap and State of New Hampshire, have invented certain new and useful Improvements in Water-Motors, of which the following is a specification.

My invention relates to water-wheels adapted to rotate horizontally.

The object of my invention is, first, to provide a wheel which shall be capable of furnishing the maximum power while containing the minimum square inch of surface presented to the water, and, second, to provide a wheel which shall be adapted to utilize for its operative force the velocity of a horizontal flow and the gravity of the water combined.

My invention consists in combining with an upper disk having central depression and three or more perforations, and a lower concave disk about one-fourth less diameter and having central opening, slightly-twisted floats, their tops and bottoms being placed tangentially with the periphery of said opening and depression, whereby their inner edges have a more acute angle than the outer; also, in combining with the motor, constructed substantially as shown, a circular convexed cap-piece having partitions on its under side at the same angle as are the float-tops relatively to the periphery of the cap-piece, whereby an auxiliary force is obtained from the waste water escaping upward between the upper disk and its conduit. In my motor the floats take substantially the same pressure vertically and horizontally, and the motor may take water from a horizontal or vertical conduit.

In the accompanying drawings, forming part of this specification, Figure 1 is an elevation of a portion of the conduit and curb, within which my improved wheel is shown in its proper position, Fig. 2 being a plan of the same. Fig. 3 shows my improved wheel in perspective as when detached from its mountings. Fig. 4 is a vertical section at Y Y, Fig. 2, having the floats removed from the wheel, in order to better show the construction of the conduit and curb. Fig. 5 is a plan view of both upper and lower disk which form part of my improved wheel, the former being broken away for the purpose of showing the central opening in the latter, through which the water is discharged. In this view is also shown in dotted lines one of the floats in position relative to and between the two disks.

Like reference-letters indicate corresponding parts throughout the several views, in which—

A represents the conduit, and B the curb, which may be provided with bearings above and below for carrying the driving-shaft C, upon which is mounted my improved wheel, as follows: Two disks, D D′, are provided, between which my improved floats E are placed and secured in position by cap-screws, which pass through the respective holes d d' of said disks, and are threaded to the said floats E. The upper disk, D, is provided with a hub, d^2, by which the wheel is mounted upon the driving-shaft C and properly secured thereto. This upper disk, D, may also be provided with suitable air-vents, d^3, as seen in Fig. 5. The lower disk, D′, is formed dishing, substantially in the manner shown in the drawings, and has a large opening, d^4, in its center, through which the water may fall after having spent its force upon and passed between the floats E. The disk D′ is about one-fourth larger in diameter than is the disk D, and the bottom of the floats, when secured in position, rest tangentially, or nearly so, with the opening d^4 of the disk D′, and upon the same.

The outer edge of the floats, when viewing the wheel in side elevation, describes an angle of about forty-five degrees in passing from the lower to the upper disk, this being best shown at X in the perspective view, Fig. 3.

The tops of the floats E are secured to the under side of the disk D tangentially, or nearly so, with the inner circle of the annular flat surface d^5 of said disk, by reason of which the inner edge of the floats E is on a different angle relative to the disks D D′ than is the outer edge of said disks. Of course, the number of floats used in the wheel might be varied; but in practice it has been demonstrated that ten floats formed as above described, and so placed between the two disks as that their outer edges shall be on an angle of nearly forty-five degrees, are most preferable and give the best results.

In the drawings, the conduit A is represented as being about twice the height of the wheel, the bottom of which, on the inner side, is flush with the top surface of the lower disk, D'; but the top of said conduit, from an imaginary line at right angles therewith and intersecting the radial point of either of the disks D D', tapers gradually downward, while following the curb B around said wheel to its terminus at *a*, where it is flush with the upper disk, D. The outer wall, *a'*, of said conduit or curb B, from the point where the roof commences to taper, curves thence to its terminus *a*. Eccentrically with said wheel, and to a point opposite to that at which the roof commences to taper, said wall is vertical, but from thence said wall gradually inclines inward toward its terminus, where its angular side corresponds with that of the wheel, as shown best in Fig. 2.

The inner wall, a^2, of the conduit or curb A B is provided with an annular flange, a^3, which projects one-half (½) inch (more or less) over the upper disk, D, of the wheel, and in order to utilize the waste of water which would otherwise occur the plate-piece F is provided, as seen in Figs. 1, 2, 3, and 4, having the same number of partitions or floats *f*, and placed on the same angle as the floats E of the wheel. This may be secured by four or more cap-screws, *f'*, to the upper disk, D, and supported in the center by the hub d^2 of said disk, where also a hole, f^2, is formed, through which the driving shaft C may pass.

Having described the construction of my improved wheel and its conduit and mountings, I will now proceed to show its mode of operation.

A gate or valve will be provided at some suitable point in the conduit, and when opened the water strikes the floats E on their outer side, *e*, and, after rushing the length of the curb B, escapes between the said floats, and is discharged through the opening d^4 in the center of the disk D'. The water which escapes between the disk D and the flange a^3 of the inner wall, a^2, of the curb or conduit spends its force upon the partitions or floats *f* of the plate-piece F before passing through the openings d^3 of the disk D and joining the main body of water within the wheel. Thus no water is wasted, except what may escape between the lower disk, D', and the bottom of the conduit and all water (except the latter) is spending its entire force upon the wheel and generating power, which may be transmitted to various machinery by means of the shaft C, bevel-gearing, and belt-pulleys, in the ordinary manner.

Having described my invention, what I claim as new, and desire to secure by Letters Patent, is—

1. In a horizontal water-wheel, the combination, with an upper disk having a central depression and provided with three or more perforations, as shown, and a lower concaved disk of about one-fourth greater diameter, having a central opening, of floats formed slightly twisting, their tops and bottoms being placed tangentially, respectively, with the periphery of said central depression in upper disk and the central opening in lower disk, whereby their inner edges assume a more acute angle than do their outer edges, all constructed and operating substantially as and for the purpose set forth.

2. The combination, in a water-wheel having upper and lower disks and interposed floats, substantially as described, of a circular convexed cap-piece and partitions formed on its under side, and on the same angle as are the tops of said floats relative to the periphery of said cap-piece, whereby an auxiliary force is obtained from waste water escaping upward between the upper disk of the wheel and its conduit, as specified.

3. In a water-wheel and conduit, all constructed and operating substantially as described, the combination, with the upper disk of said wheel and an annular flange formed upon the inner wall of said conduit, of a circular cap or plate piece secured by cap-screws to said upper disk, and extending slightly over said annular flange, and partitions formed underneath and on the same angle as are the tops of the floats of said wheel, as and for the purpose described and set forth.

In testimony whereof I affix my signature in presence of two witnesses.

JOHN P. HUSSEY.

Witnesses:
J. B. THURSTON,
ALMAN C. LEAVITT.