US00RE43455E

(19) **United States**
(12) **Reissued Patent**
Ragner

(10) **Patent Number: US RE43,455 E**
(45) **Date of Reissued Patent: Jun. 12, 2012**

(54) **LIGHT-WEIGHT SELF-PROPELLED VACUUM CLEANER**

(75) Inventor: **Gary Dean Ragner**, Gainsville, FL (US)

(73) Assignee: **Tacony Corporation**, Fenton, MO (US)

(21) Appl. No.: **12/984,964**

(22) Filed: **Jan. 5, 2011**

Related U.S. Patent Documents

Reissue of:
(64) Patent No.: **7,150,068**
Issued: **Dec. 19, 2006**
Appl. No.: **10/639,659**
Filed: **Aug. 12, 2003**

U.S. Applications:
(63) Continuation of application No. 12/340,282, filed on Dec. 19, 2008, now Pat. No. Re. 42,155.

(60) Provisional application No. 60/403,130, filed on Aug. 12, 2002.

(51) **Int. Cl.**
A47L 5/30 (2006.01)

(52) **U.S. Cl.** **15/340.2**; 15/384

(58) **Field of Classification Search** 15/319, 15/340.2, 354, 355, 361, 369, 377, 41.4, 15/43, 48.2, 384
See application file for complete search history.

(56) **References Cited**

U.S. PATENT DOCUMENTS

755,596	A *	3/1904	Keyes	15/347
2,266,075	A	12/1941	Replogle	
3,220,043	A *	11/1965	Lampe	15/340.2
3,460,187	A *	8/1969	Fillery	15/361
4,426,751	A	1/1984	Nordeen	
4,577,366	A *	3/1986	Miller et al.	15/388
4,624,025	A *	11/1986	Kaulig et al.	15/41.1
4,845,797	A *	7/1989	Kobayashi	15/41.1
4,850,077	A	7/1989	Venturini	
5,307,538	A *	5/1994	Rench et al.	15/352
6,073,303	A	6/2000	Hinojosa	
6,918,156	B2 *	7/2005	Joo et al.	15/388
2002/0124334	A1 *	9/2002	Worwag	15/52.1

* cited by examiner

Primary Examiner — Shay Karls
(74) *Attorney, Agent, or Firm* — Christopher R. Carroll; The Small Patent Law Group LLC

(57) **ABSTRACT**

A vacuum cleaner power head (**40**) for vacuum cleaning and having two counter rotating agitators **52** and **54**. Motor (**60**) rotates agitators (**52**) and (**54**) through transmission (**70**), and also rotates suction fan (**65**) to provide suction air to the rotary brush agitators. Exterior housing **48** and inner housing (**49**) provide air suction passageways to direct suction air through fan (**65**) and out of the housing to a dirt collection bag (**34**). Self-propelled function is provided by using user force on handle (**32**) to create differential contact friction between the two counter-rotating rotary brush agitators so that a net traction force is generated that propels power head (**40**) in the direction the user is pushing.

20 Claims, 7 Drawing Sheets

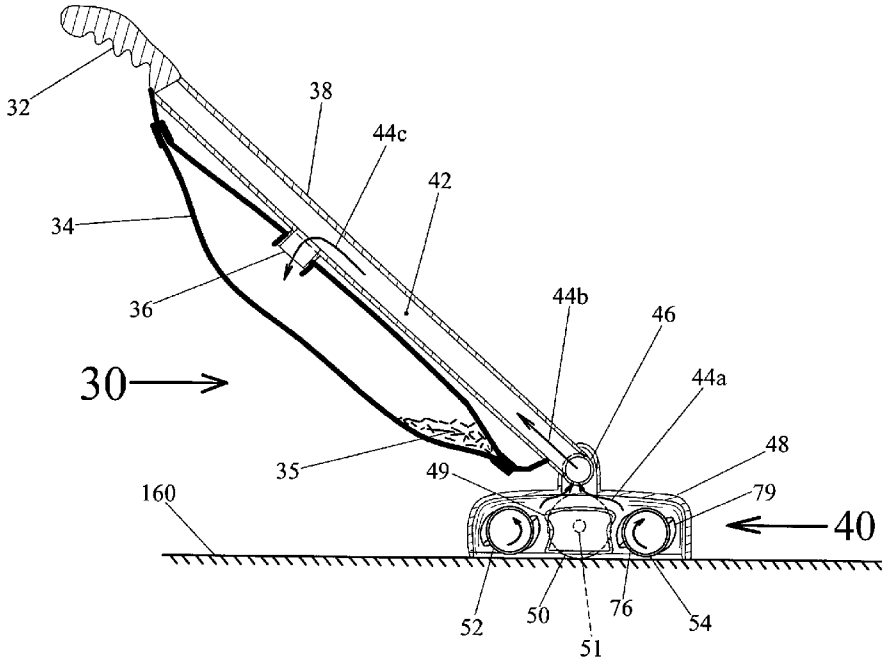

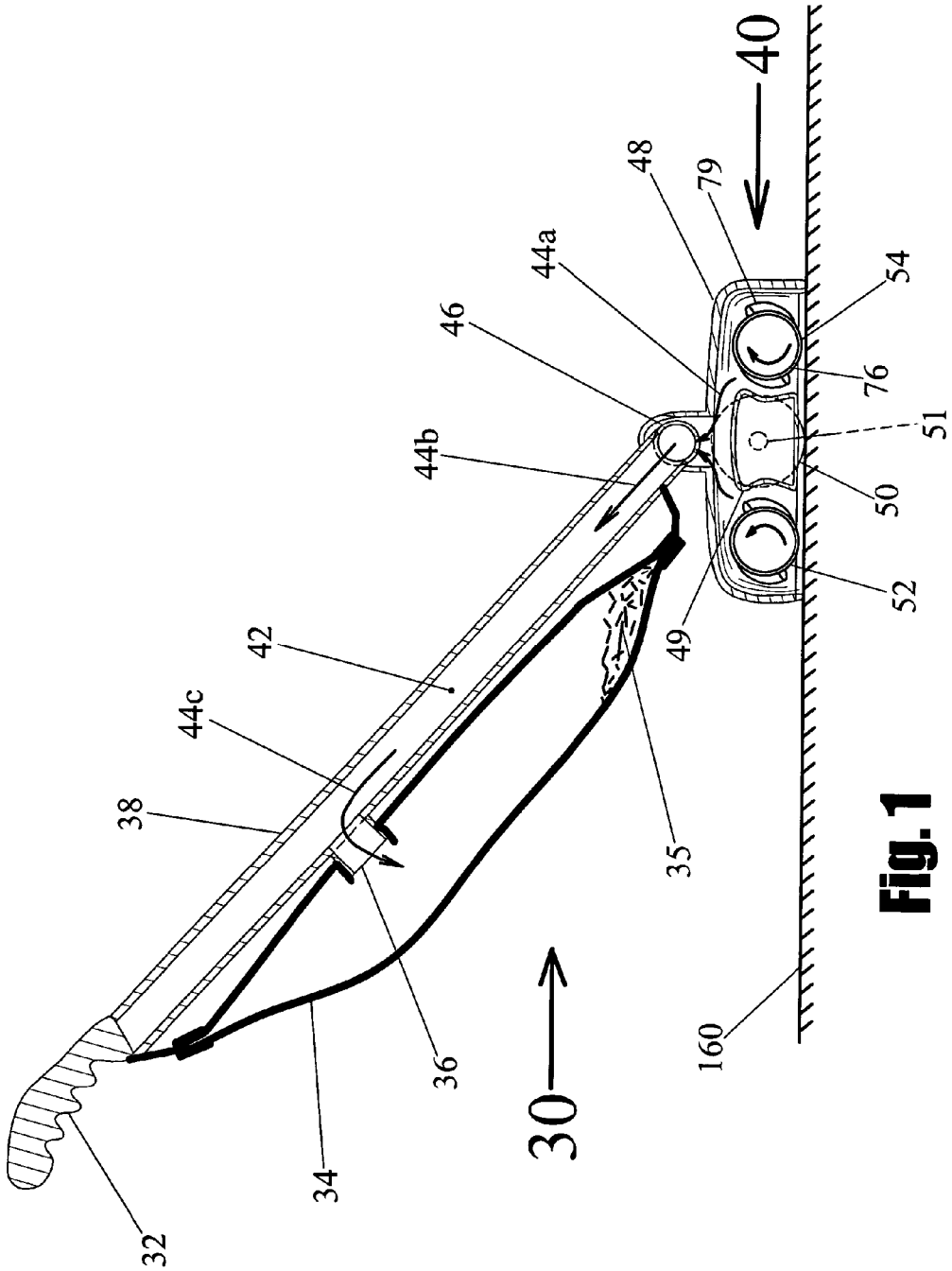

Fig. 1

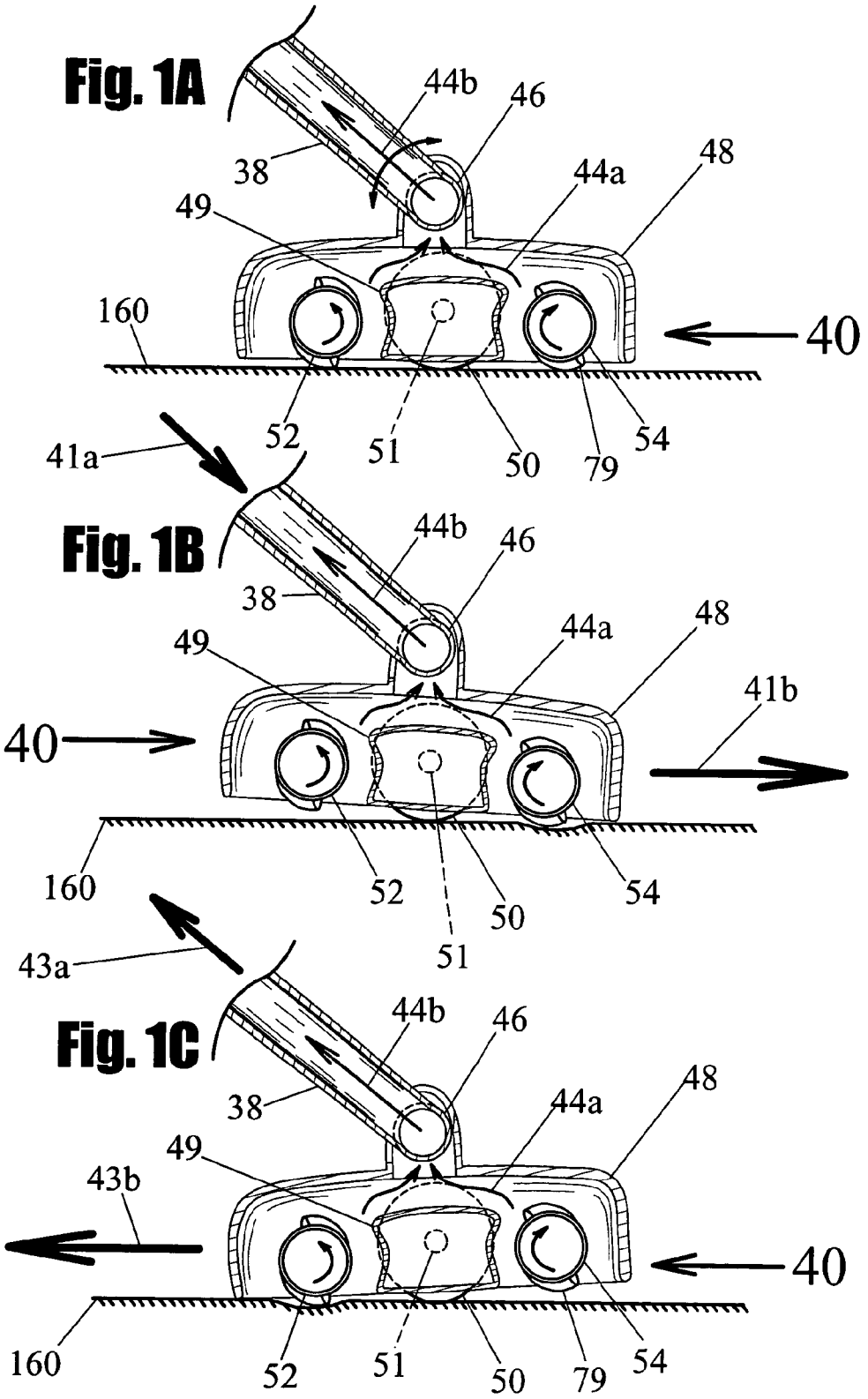
Fig. 1A
44b
46
38
44a
48
49
160
40
41a
52
51
50
79
54
Fig. 1B
44b
46
38
44a
48
49
41b
40
160
52
50
54
51
43a
Fig. 1C
44b
46
38
44a
48
49
43b
40
160
52
51
50
79
54

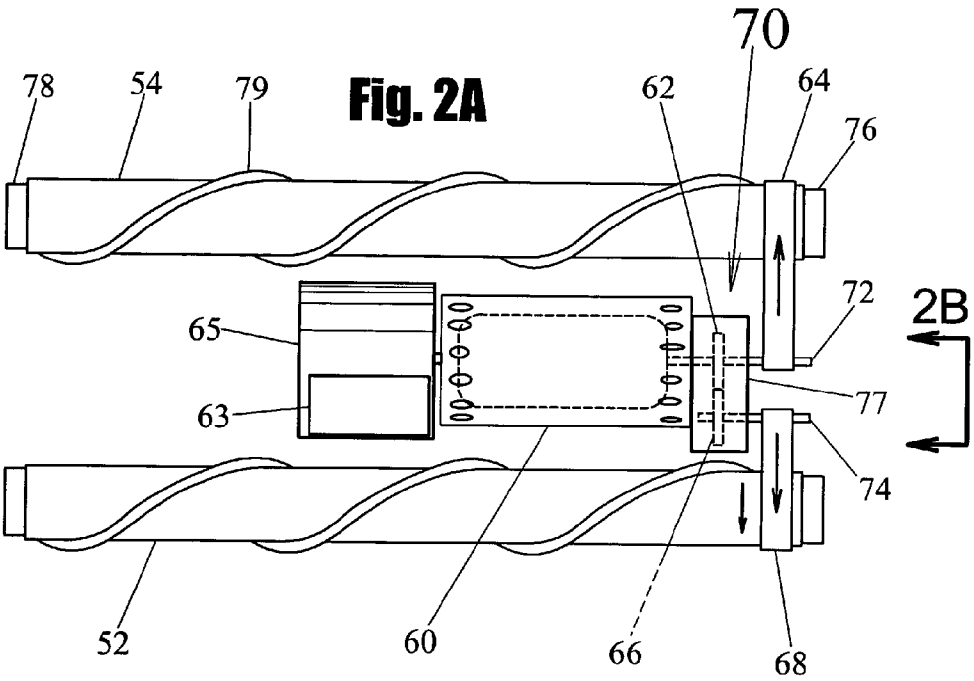
70
78
54
79
62
64
76
72
2B
65
77
63
74
52
60
66
68

Fig. 2A

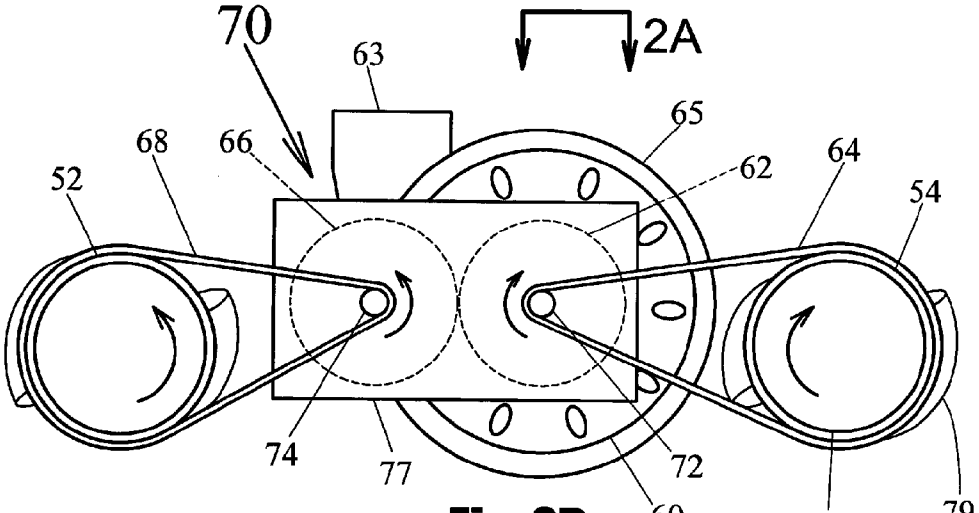
70
63
2A
65
68
66
62
64
52
54
74
77
72
60
76
79

Fig. 2B

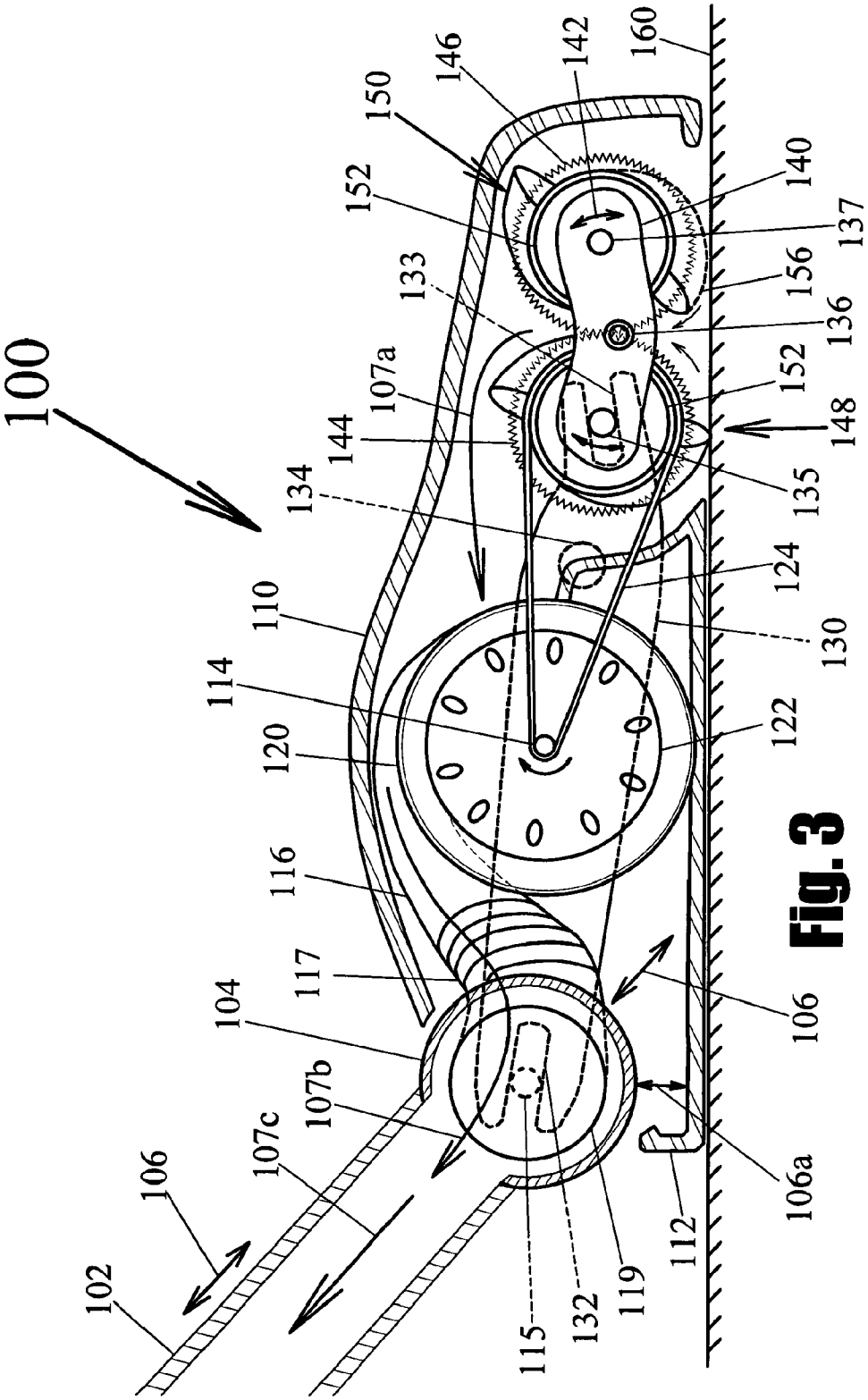
100
102
106
107c
107b
104
117
116
120
114
110
134
144
107a
133
152
150
146
142
160
140
137
156
136
152
148
135
124
130
122
106
106a
112
119
132
115

Fig. 3

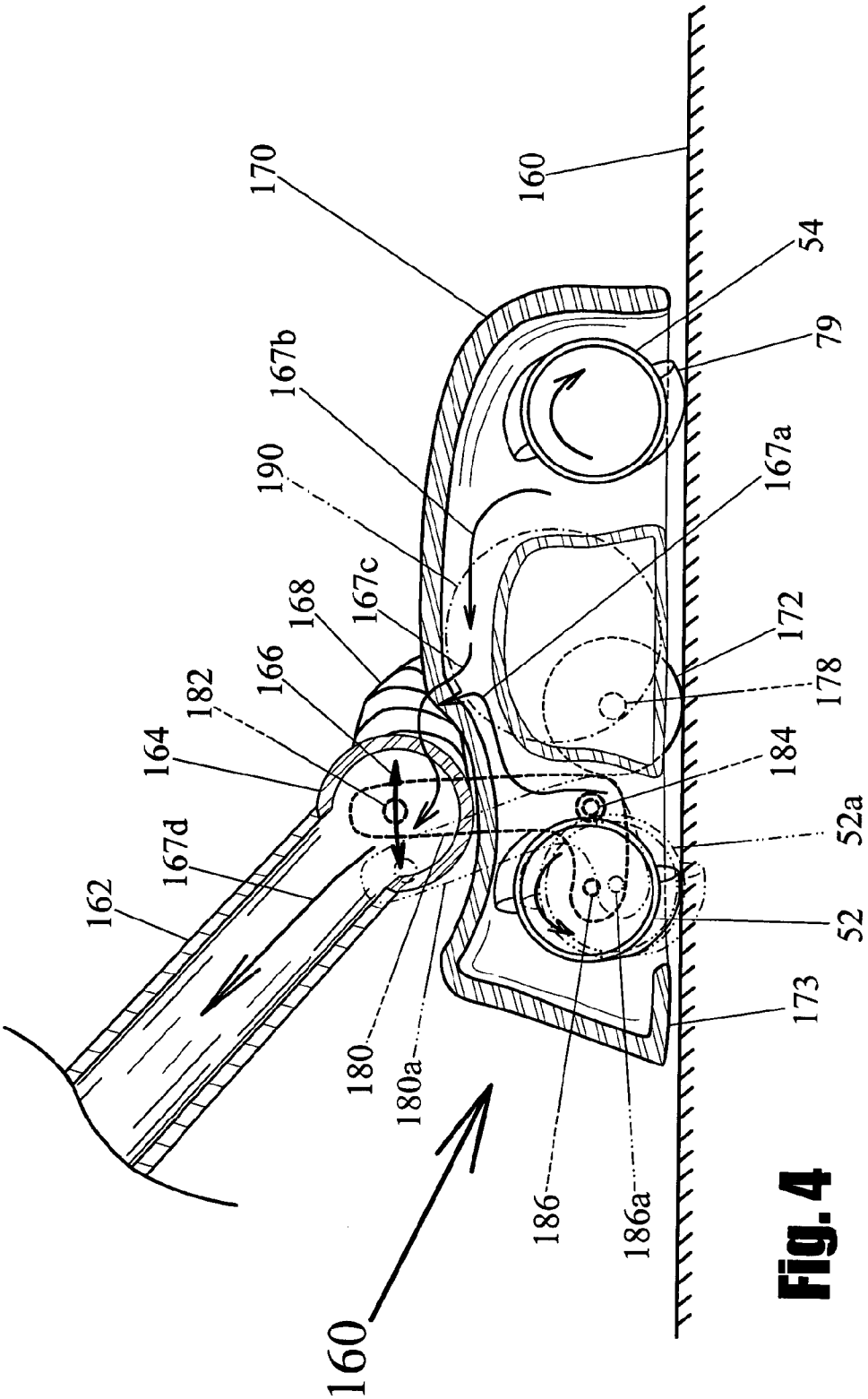
170
160
54
79
167b
167a
190
172
178
167c
168
166
182
164
184
52a
167d
162
52
173
180
180a
186
186a
160

Fig. 4

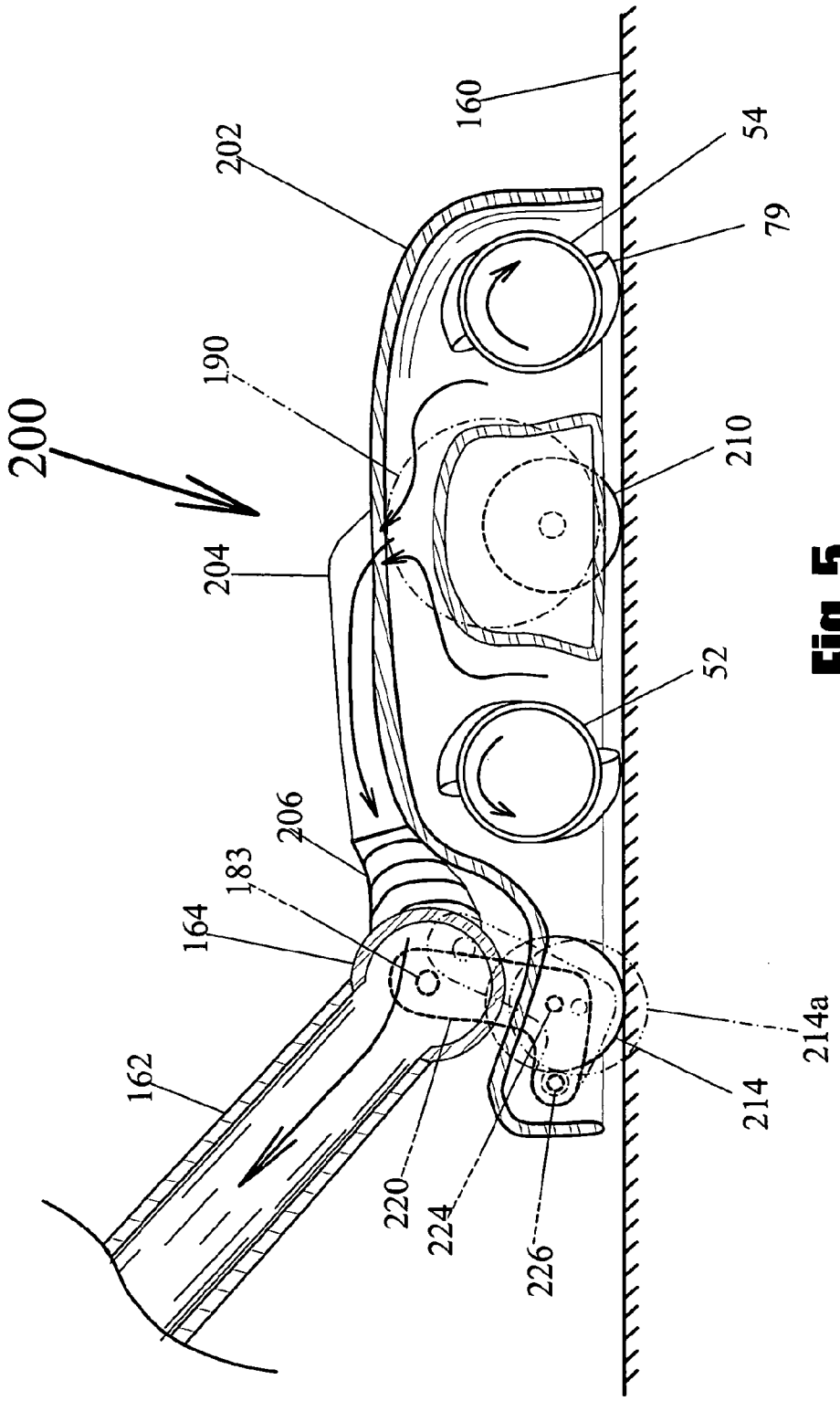
200
202
190
204
206
183
164
162
160
54
79
210
52
220
224
226
214
214a

Fig. 5

Fig. 6A

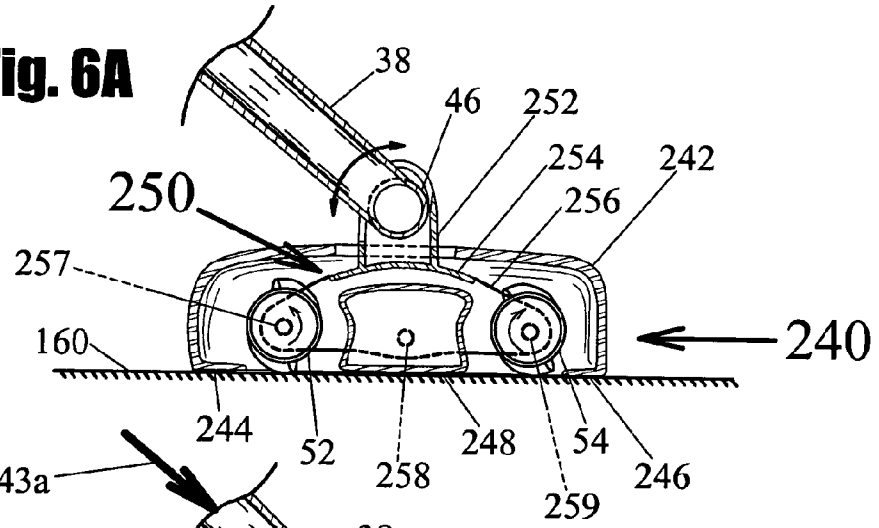

Fig. 6B

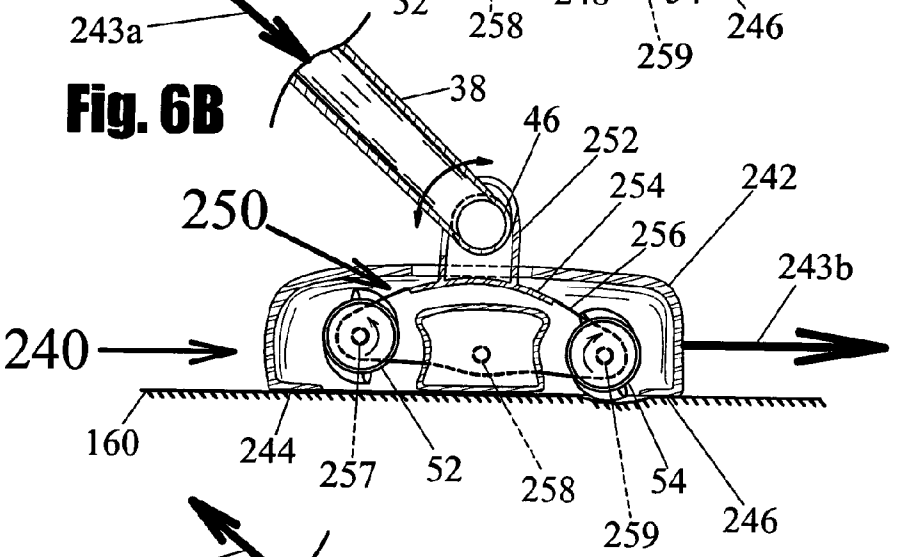

Fig. 6C

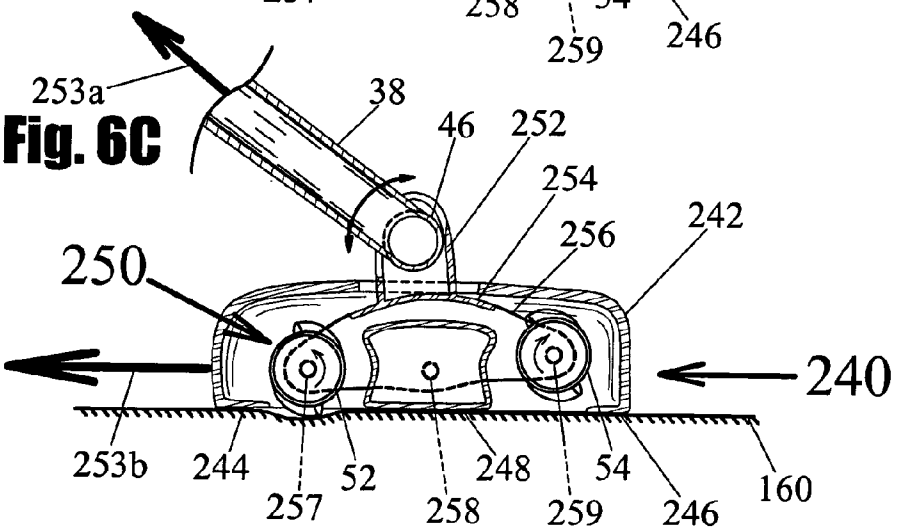

LIGHT-WEIGHT SELF-PROPELLED VACUUM CLEANER

Matter enclosed in heavy brackets [ ] appears in the original patent but forms no part of this reissue specification; matter printed in italics indicates the additions made by reissue.

CROSS-REFERENCE TO RELATED DOCUMENTS

This application is a continuation reissue application of U.S. Reissue patent application No. 12/340,282, which is a reissue application of U.S. Pat. No. 7,150,068. Therefore, more than one reissue application has been filed for the reissue of U.S. Pat. No. 7,150,068. The reissue applications for U.S. Pat. No. 7,150,068 are the present application and U.S. patent application Ser. No. 12/340,282.

This patent application claims priority from U.S. Provisional application Ser. No. 60/403,130, filed on Aug. 12, 2002, which claims priority from U.S. Disclosure Document No. 478,683 filed on Aug. 17, 2000, titled, "Counter-Rotating Beater Bar Drive for a Vacuum Cleaner".

BACKGROUND—FIELD OF INVENTION

This invention relates to vacuum cleaners and more specifically to vacuum cleaners with power assisted motion, or self-propelled motion of the vacuum power head.

SUMMARY

The vacuum cleaner design disclosed hear teaches a way to provide a self-propelled vacuum cleaner with little or no added weight to the vacuum. Traditionally, putting a wheel drive system on a vacuum cleaner has greatly increased the weight of the vacuum. The need for a heavy transmission, clutch and large drive wheels has made power assisted or self-propelled vacuums bulky. The disclosed invention provides very precise motion control without the need for drive wheels, control switches, clutches, or a bulky transmission. Instead, the disclosed invention relies on rotary brush agitator friction (traction) to self-propel the vacuum. Most vacuums use a single rotary brush agitator, sometimes referred to as a "beater-bar", to agitate a carpeted surface to loosen dirt. The vacuum power head disclosed here requires at least two rotary agitators. On the disclosed designs the agitators rotate in opposite directions so that dirt may be swept into the area between them by the brushing action of the agitators. This dual agitator action is organized so that pulling and pushing on the vacuums handle causes one or the other rotary agitator to have greater traction than the other and thus create a net propelling force on the vacuum's power head. When the handle is pushed forward, more force is placed on the front roller and thus causes it to provide greater frictional contact. The difference between the friction force on the two rotary agitators determines the net force generated. Since the bottom of the front agitator rotates from front-to-back, greater contact force on this agitator causes a force to be generated in the forward direction. The rotary agitator literally drags along the floor or carpet, and pulls the vacuum forward. When the handle of the vacuum is pulled backward the rear rotary brush agitator is instead forced against the floor. This causes the vacuum to be pulled backward by greater friction force generated by the rear agitator, which is rotating in the opposite direction of the front agitator. The control of this self-propelling feature can be very precise if the vacuum is balanced properly. That is, the forces on each rotary agitator cancel when no force is placed on the vacuum handle (hose wand). If any small force is placed on the handle, this causes the vacuum's agitators to move the vacuum head in that direction. When the user stops pushing, the forces on the rotary agitators automatically adjust to bring the vacuum to a stop. Because of this moment by moment force adjustment of the vacuum, this self-propel feature can move the vacuum slowly or quickly depending on how fast the user tries to move the handle. This type of vacuum or power head attachment can be designed to be very sensitive to user applied force. The vacuum can be thought of as a positional drive, where the user simply moves their hand to where they want it to go and the vacuum moves to follow the user's hand. However, if the user moves their hand too quickly, the momentum of the vacuum can cause a delay in the vacuum changing direction. This momentum factor limits how fast the vacuum can react to the user. On carpeted floors the friction forces may be quite high which can allow the vacuum to have very fast reaction times.

BACKGROUND—DESCRIPTION OF PRIOR ART

Vacuum cleaners with counter rotating rotary brush agitators where found in the prior art such as, U.S. Pat. No. 2,266,075 to Replogle, U.S. Pat. No. 3,220,043 to Lampe, U.S. Pat. No. 4,426,751 to Nordeen, U.S. Pat. No. 4,850,077 to Venturini, and U.S. Pat. No. 6,073,303 to Hinojosa. Many rug shampooers exist that use counter rotating brushes to cancel the forces generated by the scrubbing, and provide self-propelled function without lifting and lowering their handle, which provides a self-propelled assisted action similar to the Applicants, but are not designed to work in the environment of a vacuum cleaner where faster moving rotary agitators are used and suction pressure must be compensated for. Only U.S. Pat. No. 2,266,075 to Replogle, appears to provide a self-propelled function that uses only the agitator bars to provide propulsion. However, the design does not offer a way to make such a vacuum "low profile" as seen in FIGS. **3** and **5**, which is a big advantage in today's market, nor does it describe a means for placement of both agitators substantially next to each other for better cleaning. U.S. Pat. No. 3,220,043 to Lampe, also shows alternate contact for agitator brushes, but also have drive wheels that make alternate contact with the surface being cleaned. This overly complicates the design compared to the Applicant's

OBJECTIVES AND ADVANTAGES

Accordingly, several objects and advantages of my invention are:

a) To provide a light-weight self-propelled vacuum cleaner and/or power head attachment.

b) To provide a self-propelled vacuum and/or power head attachment without the need for drive wheels, drive transmission or separate drive motor. Instead the vacuum uses the rotation of the agitators to provide locomotion.

c) To provide a vacuum and/or power head with counter rotating agitators where the agitator's contact friction force may be adjusted by the user by sensing the force on the vacuum's or power head's handle.

d) To provide a vacuum and/or power head with counter rotating agitators where the contact friction force is adjusted by pivoting of the power head portion of the vacuum cleaner (see FIGS. **1** through **2**B).

e) To provide a vacuum and/or power head with counter rotating agitators where the agitator's contact friction force is adjusted by placing a pivot point between the agitators that allow them to rotate to different heights from a surface. This differential in height results in one agitator being in heavier contact with the surface and thus, creating the greatest propelling force (see FIG. **3**).

f) To provide a vacuum and/or power head with counter rotating agitators where the agitators' contact friction forces are adjusted by moving one of the agitators in the vertical direction within the power head under the control of forces exerted on the handle of the vacuum (see FIG. **4**).

g) To provide a vacuum and/or power head with counter rotating agitators where the differential drive force generated by the agitators may be adjusted by raising and lowering a support wheel. The support wheel position is controlled by the handle of the vacuum (see FIG. **5**).

h) To provide a vacuum and/or power head with counter rotating agitators where the differential drive force generated by the agitators may be adjusted by pivoting the agitator assembly (agitators and drive motor) within the power head portion of a vacuum cleaner (see FIGS. **3**, **6**A–**6**C).

DRAWING FIGURES

FIG. **1** Vacuum cleaner with counter-rotating agitators for self-propelled operation. Self-propelled mode is controlled by pivoting of the entire power head.

FIGS. **1**A–C Vacuum cleaner with counter-rotating agitators shown in stationary, forward driven, and backward driven modes.

FIGS. **2**A–B Agitators and motor drive for power head in FIGS. **1**, **1**A, **1**B and **1**C.

FIG. **3** Power head design with rear mounted pivot for handle portion. Self-propelled mode is controlled by pivoting the agitator assembly within the power head.

FIG. **4** Power head design with handle portion mounted to a pivot arm. Self-propelled mode is controlled by adjusting the height of only one of the agitators with respect to the power head.

FIG. **5** Power head design with handle portion mounted to control the height of a support roller. Self-propelled mode is achieved by adjusting the height of the support roller to change the proportional contact of the agitators with the surface being cleaned.

FIGS. **6**A–C Power head design with handle portion mounted to a pivotable agitator assembly. Self-propelled mode is achieved by pivoting the agitator assembly to change the proportional contact of the agitators with the surface being cleaned.

DETAILED DESCRIPTION OF THE PREFERRED EMBODIMENTS

The use of vacuum cleaners for cleaning floors is well known. Vacuums are made in many different styles and types. A basic vacuum design includes a handle portion (which normally includes a dirt collection bag), and a vacuum power head. The power head generally comprises a rotary agitator, an agitator motor, and a pivoting attachment to the handle portion. This pivoting attachment sometimes includes an air conduit for passing dust from the power head to the collection bag. All the designs show here, show the air conduit built into the handle, however, a separate air conduit may easily be used to connect the collection bag and the power head. This would eliminate the need for the air conduit to pass through the handle pivot joint. The suction motor and suction fan that provide the airflow to transfer dust to the bag can be mounted in the handle portion or in the power head portion depending on the style of vacuum it is, or external to both the handle portion and power head, as in a central vacuum system. The disclosed invention deals with the power head portion of the vacuum and how the handle portion interacts with the power head. The suction fan and motor may be mounted within the power head or be located completely separate from the disclosed invention (such as when used with a central vacuum system where the suction vacuum is usually mounted in the user's garage or with a canister vacuum). Thus, the disclosed invention may be used on power heads with or without suction power built into the power head itself, so that it can be used with stand alone upright vacuums, canister vacuums, and/or central system vacuums (see FIGS. **4**, **5** and **6**).

The counter-rotating agitator designs shown here can be separated into two basic types: A) adjusting the position of both agitators (see FIGS. **1**, **3**, **5** and **6**), and B) adjusting the position of only one agitator (see FIG. **4**). Examples of these two types are shown in this patent, but do not represent a complete list of possible configurations, but some of the many possible ways the friction (traction or drag force) on the agitators can be controlled to provide self-propelled operation. FIGS. **1** through **2**B show a vacuum power head that adjusts the contact friction of the agitators by pivoting the entire power head. FIG. **3** shows the agitators being adjusted by pivoting an agitator assembly within the power head though a linkage system. FIG. **4** shows the contact friction being adjusted by adjusting the position of just one of the agitators. FIG. **5** shows the contact friction being adjusted by raising and lowering a support roller wheel. And FIG. **6** shows a power head where a dual rotary brush agitator assembly (agitators, motor, transmission, belts and/or gears) is pivoted inside the power head housing to adjust the contact friction.

In FIG. **1** we see the disclosed invention designed into an upright vacuum cleaner **30**. Power head **40** comprises a housing **48**, an inner housing **49** (air channel system), a support wheel **50** and two agitator rotors **52** and **54**, each with two or more brush strips **79**. Agitator **52** is mounted in the rear and Agitator **54** in the front of power head **40** (this front/rear positioning is maintain for FIGS. **1**A through **2**B). A fan motor and a suction fan (neither shown) are commonly mounted on the handle portion of the vacuum. However, power head **40** may include a vacuum motor and a suction fan within its housing (see FIGS. **2**A, **2**B, **3**, **4**, and **5**) to provide suction air for cleaning. The vacuum motor and a suction fan are often combined with the agitator drive motor so that only one electric motor is needed to power everything (see FIGS. **2**A and **2**B). For clarity, the drawings in FIG. **1** and FIGS. **1**A through **1**C do not show the agitator motor drive assembly (seen in FIGS. **2**A and **2**B). The vacuum's handle portion is attached to power head **40** by pivot joint **46**, which can rotate along an axis perpendicular to the plane of the drawing sheet. Pivot joint **46** also allows air to flow through it from the agitators and up hose extension **38** (hose wand). Hose extension **38** has an air outlet **36** which leads to a dirt collection bag **34**. Dirt and dust **35** collects in this bag near the bottom. Handle **32** at the top of hose extension **38** provides the user with an easy to use grip.

In FIGS. **1** through **1**C, vacuum **30** has been sectioned near its centerline to provide the shown side view. All the components have been sectioned along this centerline except agitators **52** and **54**. For clarity, motor **60**, suction fan **65**, and transmission **70** have been removed from the drawings. Exterior housing **48** and inner housing **49** are sectioned to expose

agitators **52** and **54** which are positioned as if the entire housing was there. The agitators rotate in opposite directions to provide better cleaning and also to provide both forward and backward self-propelled action. The front agitator **54** rotates clockwise (surface of agitator **54** moving backward where it is in contact with floor surface **160**) and rear agitator **52** rotates counter-clockwise (surface of agitator **52** moving forward where it is in contact with floor surface **160**) in FIGS. **1** through **2**A. In the other Figures the front and rear agitators rotate in the same directions. While the self-propelled vacuum head could easily be made to operate with the agitators rotating in the opposite directions shown, this would be undesirable because dirt would tend to be kicked away from the center of the vacuum, and back out onto the floor. This would happen much less with the agitators rotating as shown in this invention. Inner housing **49** provides the air passageways for cleaning and also provides support for the motor and suction fan (both cut away in these drawings). Inner housing **49** may be designed to provide significant air suction in the areas between housing **49** and the agitators, so that objects sucked-up can move with the motion of brush strips **79**. Support wheels **50** are mounted on each side of the power head at pivot bearing **51** to provide support for the power head and to provide a pivot point for the power head. This pivoting action allows differential pressure to be exerted on agitators **52** and **54** during operation. Only the left wheel **50** is shown in shadow in FIGS. **1**–**1**C, since the right wheel has been cut away with the sectioning of the housing The shown position of wheel **50** is for illustration only. The wheels' actual axis of rotation may be repositioned (mounted further forward or rearward) to provide the desired pivoting operation. The bottom portion of the housing **48** is designed to ride above surface **160** so that it can pivot forward and backward as seen in FIGS. **1**B and **1**C respectfully.

In FIGS. **2**A and **2**B we see the motor assembly for the vacuum cleaner seen in FIGS. **1**–**1**C, (a top view in FIG. **2**A, and a right side view in FIG. **2**B). Housings **48** and **49** have been removed as well as other air conduit structures. The agitators **52** and **54** may be identical in design with mounting bearings **78** and **76**. Brush strips **79** provide a beating action as the agitators rotate, and can comprise bristles and/or friction ridges. Electric motor **60** drives suction fan **65** and transmission **70**. Suction fan **65** pulls air in from around agitators **52** and **54**, and discharges the air through output port **63**. The airflow is directed between the agitators and the suction fan **65** by the housings that have been removed in this drawing. Air from port **63** then flows into pivot joint **46**, up handle **38** and into collection bag **34** (see FIG. **1**). While this design uses rigid joints to transfer suction air, as we will see in later designs, a flexible hose can be used as an interface between the power head, and the handle and/or collection bag. Motor **60** also provides rotary power to transmission **70** to power the agitators. Transmission **70** comprises housing **77**, gears **62** and **66**, and their respective drive shafts **72** and **74**, respectfully. Gear **62** and drive shaft **72** are driven directly by motor **60**. Gear **66** and drive shaft **74** are driven by gear **62** to rotate in the opposite direction of gear **62**. Thus, shafts **72** and **74** rotate in opposite direction when motor **60** is operating. Belt **64** is installed over shaft **72** and agitator **54** and designed to transfer rotary power to agitator **54** in the correct direction when the motor is operating. Belt **68** provides the same function for agitator **52**, conducting rotational force from shaft **74** to agitator **52**. Bearings **76** and **78** provide the mounting points for the agitators within housing **48**. It may be desirable for bearing **76** to be better quality than bearing **78** since substantially more force is placed on bearing **76** because of the tension in belt **64** (belt **68** for agitator **52**).

In FIG. **3** we see an alternative power head design **100**, where the agitators are pivoted internally. Hose wand **102** leads to an upright vacuum design dirt collection bag similar to bag **34**, but may be connect to a canister vacuum or central vacuum hose. If hose wand **102** is connected to an external suction air supply (central, or canister vacuum), then, motor **122** needs to only drive agitators **148** and **150** and can be made smaller than that needed power head **100**. Agitators **148** and **150** can be identical in this design and are mounted next to each other. Motor **122** is large enough to drive a suction fan **120** (behind motor **122** in FIG. **3**) and provide a suction airflow around agitators **148** and **150**. The agitator assembly comprises: two agitators **148** and **150** (though more could be used) each having brush strips **156**, bearings **152**, and gears **144** and **146** respectfully, a support bar **140** on each side, a pivot hinge **136** on each side, an agitator connector with a rocker pin **135**, and a agitator connector **137** on each support bar **140**. Housings **110** and **112** provide covering for power head **100**. Housing **112** is designed to slide along the surface to be cleaned and provide a stable distance between the floor **160** and agitators **148** and **150**. Housing **112** may also include roller wheels (not shown) to help this sliding motion and to also move easier on hard surfaces. Motor **122** is mounted within housings **110** and **112**, and drives a suction fan **120** and agitator **148** through shaft **114** and belt **124**. The housings provide air passageways between the agitators and suction fan to allow dirt removal. The suction fan blows dirty air into output port **116** which is connected to flexible hose **117**. Hose **117** connects to port **119** on pivot joint **104**. Pivot joint **104** is connected to the bottom of hose wand **102** and is constrained by connecting pin **115** which is guided within grooves on housing **110** to be slidable in the direction of line **106**. This arrangement provides a continuous air passageway from the agitators to hose wand **102** and ultimately to a dirt collection bag (not shown). Spring tension may be added to pivot **104** to provide the proper positioning and tension for motion **106**. Pivot joint **104** pivots around connecting pin **115** which interacts with slot **132** on control arm **130**. Pin **115** can slid within slot **132** to rotate arm **130** about pivot bearing **134**. Slot **133** is defined on the forward end of arm **130** and interacts with pin **135**, which is connected to the agitator assembly. Movement of arm **130** thus may adjust the orientation of the agitators. This pivoting action of arm **130** rotates the agitator assembly around pivot bearing **136** on support bars **140** in response to force placed on hose **102** by the user. The entire agitator assembly is attached to both sides of the housing at pivot hinge **136**, which allows the assembly to rotate as shown by the small arrows **142**. Support bars **140** on each end of the agitators, connect the agitators **148** and **150** together by their rotary bearings **152**. Support bars **140** attach directly to the agitator bearings **152** to allow the agitators to rotate between them. Gears **144** and **146** attached to rotary agitators **148** and **150** respectfully and meshing so that power is transmitted from agitator **148** to agitator **150** and so that the agitators rotate in opposite directions. Brush strips **156** on each agitator helps cleaning by agitating surface **160** to loosen dirt. The agitator assembly is designed for substantially stationary operation with pivot hinge **136** positioned substantially in-line with rocker pin **135** and drive motor shaft **114**. This in-line condition is the natural state for the assembly with tension from belt **124** pulling them in-line. This in-line arrangement reduces the amount of force needed to overcome belt tension when rotating the agitator assembly in either direction.

Power head **100** in FIG. **3** can be modified so that pivot joint **104** connects directly to rocker arm **130** at pin **115**. Pin **115** would pivot in a bearing joint which would replace slot **132**,

and guides in housing **110** would be designed to allow pivot joint **104** to move along direction arrows **106**a. This arrangement still allows force from hose wand **102** along direction arrows **106** to rotate pivot bar **130** around pivot bearing **134** and thus pivot the agitator assembly. Note that housing **112** will need to be modified slightly to make room for this new vertical motion of pivot joint **104**.

In FIG. **4** we see an alternative design where one adjustable agitator **52** is used to adjust the self-propelled function for power head **160**. Power head **160** is attached to a pivot joint **164** and suction hose wand (or hose wand) **162** similar to other handle portions seen this patent. This design shows a power head for use with canister vacuums, central vacuum systems and the like without an onboard vacuum fan, however the design can easily add a larger drive motor with a suction fan to provide its own vacuum air supply. Agitator drive motor **190** is shown in phantom lines, and drives rotary agitators **52** and **54** through belts or gears similar to the method shown in FIGS. **2**A through **3**. The same agitators **52** and **54** can be identical and are used here to point out how industry presently uses a number of standard agitator designs that are interchangeable between many different vacuum cleaners. Housing **170** is designed to provide air passageways so that air can flow from the agitators along lines **167**a and **167**b to flexible hose **168** along line **167**c and eventually to suction hose **162** along line **167**d. Flexible hose **168** allows pivot joint **164** to move along line **166** and still provide a clear air passageway from the power head to suction hose **162**. The movement of pivot joint **164** is controlled by a pair of pivot arms **180** (only left side shown in shadow behind pivot joint, right side pivot arm cut away in section). Pivot arm **180** pivotally attaches to joint **164** at pivot bearing **182**. Pivot arm **180** is mounted to the housing at pivot bearing **184**, and connects agitator **52** to it at pivot bearing **186**. Thus, suction hose **162** when moved, causes agitator **52** to raise and lower within housing **170**. Arm **180** may move to alternate positions (see example position **180**a) where agitator pivot position **186**a is lowered toward surface **160** to force agitator **52** onto the surface at alternate position **52**a of agitator **52**. Support roller **172** pivots on bearing **178** and is positioned near the rear agitator **52** so that when agitator **52** is lifted from surface **160** agitator **54** remains in contact with the surface. Pivot bearing **178** is positioned so that forces exerted down suction hose **162** (user pushing forward) are directed in front of bearing **178** so agitator **54** is kept in contact with surface **160** to provide forward propulsion. Agitator **54** may be mounted in a fixed location on the housing or may be spring loaded to provide a more constant downward force on the surface. Arm **180** may also be pre-loaded with a spring (not shown) to compensate for the weight of the suction hose **162** and pivot joint **164** so that little or no force is needed on the handle to hold power head **160** in one position during use. In general, there is not much need for spring loading if pivot **182** is place directly above hinge **184**, when agitator **52** is positioned for stationary operation. In this way, the weight of the suction hose is supported by hinge **184** and produces very little torque on arm **180**. Some spring tension may be added to counteract the force exerted by agitator **52** on arm **180** (equal downward force is needed on agitators **52** and **54** to balance traction forces against surface **160**). Landing surface **173** on housing **170** provides support for the housing when agitator **52** is raised.

In FIG. **5** we see an alternative power head design **200**. This design shows a power head for use with canister vacuums, central vacuum systems and the like without an onboard vacuum fan, however the design can easily add a larger drive motor with a suction fan to provide its own vacuum air supply. Movable support roller wheels **214** on each side of the power head are used to adjust the contact force of agitators **52** and **54** with respect to surface **160**. For this design agitators **52** and **54** and drive motor **190** are attached directly to housing **202**. Roller wheels **210** on each side of the power head (right side cut away) helps support the agitators and also provide a pivot axis for the agitators and housing **202**. Motor **190** may be connected to a suction fan to provide suction within power head **200** if desired. If a suction fan is driven by motor **190**, generally more power will be need than if the motor rotates just the agitators. The agitators are mechanically connected to drive motor **190** similarly to the design in FIGS. **2**A and **2**B. Gears and other power transfer systems may also be used to transmit power from the motor to the agitators. The method of transferring power to the agitators is not important to this invention. In fact, the agitators may have a motor built directly into it so that no power transfer system is needed at all, as is done in some vacuums. A continuous air channel is formed by housing **202**, channel **204**, flexible hose **206**, pivot joint **164** and suction hose **162**, leading from the agitators to the exit on suction hose **162**. Pivot arms **220** (only left arm shown, right arm cut away) attaches pivot joint **164** at pivot pin **183**, to housing **202** at pivot bearing **226**. Arm **220** also attaches to support roller **214** to housing **202**, which is movable in response to movement of suction hose **162** which is attached to arm **220**. Arm **220** provides a leverage advantage to roller **214** so that the rear portion of housing **202** may be raised by pushing suction hose **162** forward (magnitude of movement of roller **214** is exaggerated for clarity).

In FIG. **5**, roller position **214**a shows an alternate position for roller **214** which would raise agitator **52** off surface **160** and simultaneously force agitator **54** against surface **160**. The drawing shows wheel position **214**a below surface **160** for the motion of lever arm **220**, this is to simplify the drawing since showing housing **202** and all the components within it in an alternate raised position would make the drawing messy to read. Spring tension may be added to lever arm **220** to provide the proper tension during operation, and provide little or no force needed on hose **162** to hold the vacuum stationary during operation.

In FIGS. **6**A through **6**C we see an alternative power head design **240**. In this design, housing **242** is designed to glide along floor surface **160**. Surfaces **244**, **246**, and **248** provide a relatively flat sliding surface for the housing. Rollers may also be added on any these bottom surfaces to assist in the movement of the housing along floor surface **160**. Within housing **242** a agitator assembly is pivotally mounted to the housing at pivot pin **258**. The agitator assembly comprises agitators **52** and **54**, support structure **256** on both sides, connecting support **254**, hinge connector **252**, and the powered equipment (motor, fan and transmission not shown in FIG. **6**, but may be similar to that in FIGS. **2**A–B) to rotate the agitators in opposite directions as shown by the arrows on the agitators. Pivot hinge **46** is positioned so that user force coming straight down hose **38** passes in front of pivot hinge **258** (repeating: the projected line of force parallel to hose **38** passes in front of pivot hinge **258**). This positioning causes the agitator assembly to pivot forward (clockwise) when the user pushes forward on suction hose **38** (handle) and pivot backward (counter-clockwise) when the user pulls backward on suction hose **38**. The proper positioning of pivot joints **46** and **258**, thus, allows a pivoting action of the agitator assembly withing housing **242**. This pivoting can generate a differential traction from agitators **52** and **54**. This difference in downward force on the two agitators with respect to surface **160** causes a difference in traction between the two agitators, which provides a net forward or backward force to self-propelled the

power head. While the drawings in FIGS. **6**A–C show one method of linking the forces exerted by suction hose **38** to pivot the agitator assembly there are many ways this can be done. For example, if the connection point of pivot joint **46** is desired to be placed near the rear of power head **240** (near agitator **52**) this may be done with a simple lever arm similar to those seen in FIGS. **3**, **4**, and **5**. The pivoting of the agitator assembly would then be accomplished by leveraging some point on the assembly to pivot it in the proper direction. For example, if one wanted to specifically leverage the assembly near rear agitator **52** then a lever arm similar to arm **130** in FIG. **3**, though much shorter and with the pivot point for the lever arm located between pivot joint **46** and its connection to the assembly. Numerous other ways exist for mechanically providing the actuation of the agitator assembly to produce propulsion.

Operational Description—FIGS. **1** through **6**C

The operation of all the designs disclosed here centers around providing control over the differential traction between two counter-rotating agitators. By providing the proper control over this differential traction one can use it to propel (self-propel) the vacuum or power head in the direction the user pushes. The user's force exerted on the design is amplified by the sensitivity of agitator brushes to the contract pressure exerted on them. Thus, a small user force linked to one of the agitators can generate significant traction on carpets so that the agitator easily propels the vacuum. While all the vacuums/power head examples disclosed here produce their self-propulsion from the counter-rotating agitators, the specifics of how they control the differential traction is different. The control of the agitators can be separated into two basic types: A) those that adjust both counter-rotating agitators (see FIGS. **1**, **3**, **5**, **6**), and B) those that adjust one of the counter rotating agitators (see FIGS. **4**—note that agitator **54** is still slightly effected by forces exerted on hose wand **162**). The adjustment of both agitators has an advantage over the single agitator adjustment because when one agitator is increasing traction force, the other agitator can be decreasing traction force so that a greater net traction force can be generated. In the following section the operation of specific examples will be discussed.

The vacuum in FIGS. **1** through **1**C has the simplest construction of all the designs presented here. Power head **40** operates as a single unit, with its components remaining fixed with respect to each other during operation. Roller wheels **50** is designed to support most of the downward force created by power head **40**. Suction air flowing around agitators **52** and **54** may cause housing **48** to pulled down onto surface **160** with considerable force. Steps can be taken to reduce the vacuum suction under the housing, but some vacuum suction is needed for the power head to clean properly. Thus, wheels **50** should be places relatively near the "center of pressure" on the housing so that agitators **52** and **54** experience approximately even force pressing them onto surface **160** (when the user is not pushing or pulling on handle **32**). In FIG. **1**A, during operation with power head **40** in a stationary position, the vacuum needs very little force on the handle to hold it in place. Agitators **52** and **54** are both striking surface **160** with approximately the same downward force and generating approximately the same traction force away from each other so that they cancel each other out. The traction force on the agitators can be quite large in this stationary operation, but the agitator's counter-rotating design substantially equal and opposite traction forces so that they cancel (see FIG. **1**A).

In FIG. **1**B we see the same vacuum power head **40** with the user pressing lightly forward with force **41**a on handle **32** (see FIG. **1**). This small force **41**a, directed down suction hose **38**, causes housing **48** to experience a forward pivoting force around bearing **51**. Pivot joint **46** is located above wheel **50** so that force **41**a produces a clockwise torque around pivot bearing **51**. At the same time, the contact force of agitator **54** onto surface **160** increases and the contact force on agitator **52** decreases. This creates an imbalance of traction forces on the agitators, and a net forward directed force **41**b is generated which propels the power head forward.

When the user pulls backward on the handle, as seen in FIG. **1**C, the power head pivots backward around bearing **51**. Again the location of pivot joint **46** allows force **43**a to create a counter-clockwise torque around pivot bearing **51**. This torque is used to force agitator **52** against surface **160** to generate traction, while at the same time, agitator **54** is raised, thus reducing its traction. The result is a net backward directed force **43**b, which propels the power head backward.

Many things can be adjusted on power head **40** to provide optimized operation for specific uses. For example, the location and size of support wheel **50** may be modified to work best with the location of pivot joint **46**. Support wheel **50** may also be placed in a different location to compensate for asymmetric suction air force on the housing. And of course, many different methods of linking the user applied force to create differential contact force for the agitators. Some of these methods are shown in FIGS. **3** through **6**. Many other methods also exist, specifically the front and rear agitators can rotate in reversed directions and still operate (with modified control linkage) since it is the opposed rotating agitators that allows it to produce a differential force in either direction (forward and backward). Thus, as long as the two agitators are rotated in opposite directions, applied force from the hose wand can be used to adjust the agitator(s) to generate the properly directed net traction force.

The reader should note that the operation of these types of self-propelled assisted vacuum is not a on/off type of propulsion. Instead, the amount of self-propulsion is directly related to the amount of force the user puts on the vacuum handle. The rotating agitators amplify the user applied force, and through proper geometry of its components, amplifies it to propel the vacuum in the direction of the user applied force. Thus, power head **40** moves with the user, responding slowly if the user moves slowly and quickly if the user moves quickly.

In FIGS. **2**A and **2**B we see the motor drive system within power head **40**. During operation motor **60** turns both agitators **52** and **54**, and suction fan **65**. Suction Fan **65** may be driven directly by motor **60**. Agitators **52** and **54** are driven by power transfer from motor **60** through transmission **70** and drive shafts **74** and **72**, and then by belts **68** and **64** respectfully. Gear **62** is directly powered by the motor, and gear **66** is driven by gear **62** in the opposite direction. This provides power output to shafts **72** and **74** which turn in opposite directions. While cleaning, air is sucked from around agitators **52** and **54** and pulled through suction fan **65**. This dirty air is then discharged through output port **63** for transport to the collection bag. Air from port **63** travels to pivot joint **46**, up through air channel **42** in suction hose **38**, through outlet **36** and into dirt collection bag **34**, where the air is filtered of its dirt and cleaned air passes through the walls of the bag. Of course, other dirt collection containers and separators can be used, such as, bag-less or cyclone type systems.

In FIG. **3** we see an alternative design for power head **100** for a vacuum cleaner. Power head **100** may include a suction fan **120** driven by electric motor **122** in which case no external air suction source is needed. If motor **122** only powers the rotary brush agitators **148** and **150** then an external air suction source will need to be connected to suction hose **102**. How-

ever, the placement of the suction fan does not effect the essence of the disclosed invention, which involves the use of counter-rotating rotary agitators to self-propel the power head, and is only mentioned here for clarity and completeness. For this design, suction fan **120** provides vacuum airflow from the agitator area along airflow path **107**a. Airflow along path **107**a then passes through suction fan **120** and out through channel **116**, flexible hose **117**, and pivot joint **104** along airflow path **107**b. Finally, the airflow continues out through hose wand **102** along airflow path **107**c.

During operation of power head **100**, motor **122** turns shaft **114** which moves belt **124**, which turns rotary agitator **148**. Gear **144** on agitator **148** interacts with gear **146** connected to agitator **150**, to turn agitator **150** at approximately the same rate as agitator **148**. When no force is placed on hose wand **102**, the linkage between pivot peg **115** and the agitators is designed to position the agitators so that their traction forces substantially cancel. When the user puts a small force on wand **102**, pivot joint **104** may move in and out as shown by arrows **106** (or **106**a in modified version). When pivot joint **104** moves, peg **115** interacts with slot **132** and pivots lever arm **130** around pivot bearing **134**. The mechanical advantage of lever arm **130** allows a small force at peg **115** to produce a much larger force at pivot peg **135**. This causes the agitator assembly (agitators **148** and **150**, support **140**, hinge bearings **136**, and pivot peg **135**) to rotate about hinge bearings **136** as shown by arrows **142**. This rotation, causes one agitator to move into greater contact with surface **160** as the other agitator moves into less contact with surface **160**, and thus, provides self-propulsion. For example, in FIG. **3**, pushing hose **102** forward forces peg **115** downward to rotate lever arm counter-clockwise about bearing **134**. This causes slot **133** to lift up on peg **135** raising agitator **148** away from surface **160**, while at the same time lowering agitator **150** into greater contact with surface **160**. This creates a difference in traction force between the two agitators and their traction forces no longer cancel. The greater contact force of agitator **150** causes a greater traction force so that there is a net force to propel power head **100** forward. When the user pulls backward on hose **102**, lever arm **130** rotates in the opposite direction and agitator **148** is lowered and agitator **150** is raised away from surface **160**. Thus, the traction on agitator **148** is greatest and the power head is propelled backward. For the design shown in FIG. **3**, housing section **112** provides a low friction surface that slides easily against surface **160**. Generally, rollers (wheels) would be included on the bottom of power head **100** to reduce sliding friction, such rollers are not shown here to keep the drawing readable, but is a common practice in the art of vacuum head design. The less sliding friction that exists on power head **100** the better the differential traction from agitators **148** and **150** can propel the vacuum (upright vacuum, power head, or power wand).

In FIG. **4** we see another alternative dual-agitator vacuum head where the agitator's traction (friction) with surface **160** may be individually controlled. In this design, agitator **54** is stationary with respect to housing **170**, while agitator **52** is movable. During operation pivot joint **164** and hose **162** can rotate lever arm **180** about its axis bearing **184**. Lever arm **180** is designed so that agitator **52** is raised when hose **162** is pushed forward and lowered when hose **162** is pulled backward. Thus, when the user pushes forward on hose **162**, agitator **52** is lifted away from surface **160** and the force from the user tends to rotate housing **170** forward and press agitator **54** onto surface **160**. The position of roller wheel **172** provides the axis for this rotation. This results in an added traction force on agitator **54** that helps propel power head **160** forward for the user. When hose **162** is pulled backward, lever arm **180** rotates to force agitator **52** into surface **160**. This creates traction for agitator **52** while the backward force on hose **162** tends to lift agitator **54** away from surface **160**. The result is a net traction force propelling power head **160** backward with the user's pulling.

The design in FIG. **4** may be adjusted in many ways to provide optimum operation. For example, by moving wheels **172** and the position of agitators **52** and **54** with respect to each other, better traction control may be achieve. If wheel **172** is moved forward so that its axle **178** is substantially in-line with the direction of applied force down hose wand **162**, then pushing and pulling on the hose wand by the user will have very little effect on the contact force of agitator **54** on surface **160**. Thus, agitator **54** would have a relatively constant traction force, and raising and lowering agitator **52** would be used to adjust the net traction force, either forward or backward respectfully by adjusting the traction force on agitator **52** alone. Arm **180** amplifies the force exerted by the hose wand on agitator **52** so that very little force need be exerted on hose wand **162** to adjust the position of agitator **52**. Also, the lever arm need not control the rear agitator, but may instead control the front agitator **54**. Controlling the front agitator may provide many advantages for some designs. Also additional roller wheels may be added to assist the control over traction of the agitators. For example, another roller wheel pair may be attached to the housing in front of agitator **54**. This provides a second pivot point for the housing which can help with backward propulsion. When hose **162** is pulled backward (lowering agitator **52**) the rear portion of housing **170** is raised. If an additional wheel set is in front of agitator **54** then this rotation will tend to lift agitator **54** away from surface **160** by rotating about this new wheel set. Many other possible configurations are also possible.

In FIG. **5** we see another alternative dual-agitator vacuum head where the agitator's traction (friction) with surface **160** is controlled by a movable roller wheel **214**. Wheel **214** moves in the vertical direction in response to movement of lever arm **220**. Lever arm **220** is controlled by movement in hose **162** and pivot joint **164** through pivot pin **183**. During operation, when the vacuum is held stationary, agitators **52** and **54** just make contact with surface **160** and produce approximately the same traction force so that no net propulsion force exists. Arm **220** amplifies the force exerted by the hose wand on wheel **214** so that very little force need be exerted on hose wand **162** to adjust the agitators' positions. As hose wand **162** is pushed forward, lever arm **220** rotates and forces wheel **214** against surface **160** and lifts-up the rear portion of housing **202**. This tends to rotate power head **200** around support wheel **210**. Since the agitators in this design are attached directly to the housing they pivot with the power head. This results in agitator **54** being pressed into surface **160** and agitator **52** being lifted away from surface **160**. This generates a traction force differential between the two agitators and a net force is created that propels the power head forward in the direction of the user's applied force. When hose wand **162** is pulled backward, wheel **214** is lifted off of surface **160**. This causes the power head to be supported only by wheel **210** and agitators **52** and **54**. Housing **202** can be designed so that greater vacuum pressure force exists rearward of wheel **210** than forward of wheel **210** (though more airflow may be on the forward end). This means that once wheel **214** is lifted from surface **160** the power head tends to rotate counter-clockwise because of the greater downward suction on the rear half of the power head. This rotates the housing backward and forces agitator **52** into surface **160** while at the same time lifting agitator **54** away from surface **160**. This causes the rear portion of housing **202** to lower itself

nearer surface **160**. While pulling backward on lever pin **183** notice that a portion of that force is trying to lift-up on the rear portion of housing **202**. This upward force is easily countered by the large forces that may be generated by vacuum suction under housing **202**. Thus, the area rearward of wheel **210** need only be slightly larger than the area forward of wheel **210** for the suction force to be significantly greater rearward of support wheel **210** than in front of it. This means agitator **52** will be pressed strongly against surface **160** even when hose wand **162** is pulled upward on strongly. Notice that the natural tendency of this design is to lift the housing on the side opposite the desired direction of motion. That is, when moving backward, the front of housing **202** is lifted. This reduces vacuum pressure on that side of the vacuum because of the larger airspace between surface **160** and the housing. Thus, the design in FIG. **5** tends to generate greater suction force downward for housing **202** on the portion that needs it (correct agitator forced against surface **160**). Additional skirting (not shown) may also be added around this design to provide a consistent vacuum seal around housing **202**. This skirting could make the vacuum pressure forces more consistent while power head **200** is pivoted about wheel **210**. Also note that this control arrangement will work with the two agitators much closer together, such as, both near the front as in FIG. **3**. Pivoting of the body will still tend to create a traction difference between the agitators.

In FIG. **6** we see another alternative dual-agitator vacuum head where the agitator's traction (friction) with surface **160** is controlled by a pivotable agitator assembly **250**. For this design, housing **242** is in contact with surface **160** and supports then entire power head **240**. Housing **242** supports the power head on sliding surfaces **244** and **246** which may include roller wheels or other friction reducing structures. Housing **242** also controls the amount of air bled under the housing so that the vacuum pressure is somewhat controlled. This helps maintain a consistent vacuum force downward on the housing. During operation, agitators **52** and **54** rotate in opposite directions and produce approximately equal and opposite traction forces when no force (no force on hose wand **38**) is applied by the user (see FIG. **6**A). When the user presses forward (force **243**a) on hose wand handle **38**, agitator assembly **250** rotates forward as seen in FIG. **6**B. This rotation presses agitator **54** into surface **160** while at the same time lifting agitator **52** away from the surface. The result is a net force **243**b, generated by the agitators against surface **160**, to propel power head **240** forward. Similarly, when the user pulls back (force **253**a) on hose wand handle **38** (see FIG. **6**C), the agitator assembly rotates counter-clockwise. This forces agitator **52** against surface **160** and lifts agitator **54**. The resulting net force **253**b propels the power head backward. Support structures **252**, **254**, and **256** on agitator assembly **250** acts like a lever arm to pivot the agitators into, and away from, surface **160**. This lever arm action may be modified by adjusting the positions of pivot bearing **258** and pivot joint **46**. Additional linkages can also be included to allow pivot joint to be located anywhere on housing **242**. Also, the location of agitators **52** and **54** may be modified. In general, the closer together agitators **52** and **54** are placed to one another the greater the leverage created to generate a differential force against surface **160**. Thus, if both agitators **52** and **54** where placed side by side near the center of housing **242** a very small force on pivot joint **46** would create a large difference in contact forces for the agitators. This in turn would generate a large net traction force to propel the power head.

Ramifications, and Scope

The disclosed self-propelled power head solves several long standing problems for the vacuum cleaner industry, such as, allowing a light-weight self-propelled vacuum to provide better cleaning with two counter rotating agitators, providing exact self-propelled motion control in a light-weight system, and providing assisted self-propelled motion without heavy transmissions, clutches or electronic controls.

Although the above description of the invention contains many specifications, these should not be viewed as limiting the scope of the invention. Instead, the above description should be considered illustrations of some of the presently preferred embodiments of this invention. For example, while all the designs shown in this patent use mechanical linkages to control the differential pressure on the agitators, this need not be the only way it is done. For example, each of the designs in FIGS. **3**, **4**, **5**, and **6**A–C can be controlled by an electric actuator, solenoid, positioning motor, or other similar control device. Instead of mechanical linkages, a sensor in the vacuum's handle may sense the direction the user is pushing and move the agitator assembly (FIGS. **3** and **6**A–C), single agitator (FIG. **4**), control rollers (FIG. **5**), or other means to adjusting the position and forces on the agitators. This electronic type of control can allow more choice as to how the agitators are controlled. For example, the front agitator may be adjusted by an electric actuator. Normally the front agitator is difficult to get to because of the drive system and because the handle portion is usually attached near the back of the power head to allow the handle to lay flat when going under furniture. Finally, many aspects of the designs may be adjusted to fine tune the performance of the system. For example, the agitator drive system may be designed to produce greater torque than standard vacuums for the specific purpose of accelerating the power head (vacuum cleaner) more quickly, and/or to keep the agitators from bogging down on the surface being cleaned. Many other adjustments to the support roller positions and size, and the location of all the power head's components may be moved to different locations depending on the desired needs of the user (i.e. low profile to get under furniture, etc.). Springs and other tensioning devices can be used in many ways to provide balanced traction force on the agitators. For example, in FIG. **3** if motor **122** and fan **120** pivot with agitators **148** and **150** then tensioning springs can be used to help support the weight of motor **122**, fan **120** and hose wand **102**, so that agitator friction forces are nearly balanced when the user applies no force to the handle of hose wand **102**. Finally, the five different ways of controlling rotary agitator traction are shown in FIGS. **1** through **6**. These methods may be mixed and matched or combine with other designs to create new ways for producing the desired control over the vacuum's self-propelled assist feature.

Thus, the scope of this invention should not be limited to the above examples but should be determined from the following claims.

I claim:

[1. A vacuum power head for cleaning, comprising:

a) a housing having a front and rear portion;

b) an agitator assembly with a front rotary agitator and a rear rotary agitator;

c) an electric motor;

d) a power transfer means for transferring rotary power from said electric motor to said front and rear rotary agitators;

e) a suction conduit having an entrance and an output port;

f) a hose wand;

g) a lever arm connected between said hose wand and said agitator assembly for amplifying the force exerted by the hose wand on the agitator assemble;

h) an adjustment means associated with said lever arm and said agitator assembly for generating a net traction force on said front and rear rotary agitators when in contact with a surface and said net traction force responsive to force exerted on said hose wand by a user;

i) wherein, said suction conduit forms a continuous air channel between at least one of the rotary agitators and said output port;

j) wherein, said output port is designed to accept the hose wand, whereby dirt and dust agitated by the rotary agitators can be removed from the power head;

k) wherein, said front and rear rotary agitators rotate in opposite directions when powered by said power transfer means, and

l) wherein, said net traction force is in the direction of the front portion of the housing when the user is pushing the hose wand forward and said net traction force is in the direction of the rear portion of the housing when the user is pulling backward on the hose wand, whereby the vacuum power head provides a self-propelled function.]

[**2**. The vacuum power head in claim **1**, further including;

a suction fan for producing a suction airflow;

a handle;

a dirt collection bag; and

wherein the hose wand defines an air channel between said dirt collection bag and said output port for conducting the suction airflow to said dirt collection bag from said output port;

wherein, said suction fan is connected to said electric motor for providing said suction airflow along said continuous air channel, whereby dirt sucked up by the airflow can travel to said dirt collection bag.]

[**3**. The vacuum power head in claim **1**, wherein;

said adjustment means moves both front and rear rotary agitators with respect to the housing and around an axis between the agitators to provide said self-propelled function.]

[**4**. The vacuum power head in claim **1**, wherein;

said adjustment means comprises an adjustment assembly for pivoting one of the rotary agitator into greater and lesser contact with the surface to provide the differential traction force for propelling the vacuum power head forward and backward.]

[**5**. The vacuum power head in claim **1**, wherein;

said agitator assembly is defined by said front and rear rotary agitator mounted substantially next to each other and pivotal about an axis between them.]

[**6**. The vacuum power head in claim **5**, wherein;

said front and rear rotary agitators are both mounted substantially in the front portion of the vacuum power head.]

[**7**. The vacuum power head in claim **1**, wherein;

said agitator assembly is defined by said electric motor and said front and rear rotary agitator mounted substantially together so they are moved as a unit by said lever arm.]

[**8**. The vacuum power head in claim **1**, wherein;

said lever arm is defined by a pivot arm connected to only one rotary agitator and responsive to said user movement to raise and lower that rotary agitator to provide the differential traction force for said self-propelled function.]

[**9**. The vacuum power head in claim **8**, wherein;

said agitator assembly is defined by said front and rear rotary agitator mounted substantially next to each other and pivotal about an axis between them.]

[**10**. The vacuum power head in claim **1**, wherein;

said lever arm is connected to a support roller for raising and lowering either the front or rear portion of the housing to provide the differential traction force on the front and rear agitators which are mounted to the housing for providing said self-propelled function.]

[**11**. A vacuum cleaner power head for cleaning a surface, comprising:

a) a housing having a front and rear portion;

b) a front rotary agitator and a rear rotary agitator;

c) an electric motor;

d) a power transfer means for transferring rotary power from the electric motor to the front and rear rotary agitators;

e) a suction conduit having an entrance and an output port;

f) a hose wand;

g) a lever arm responsive to the hose wand;

h) an adjustment means associated with the lever arm and rotary agitators for adjusting the contact force of at least one of the rotary agitators with respect to the surface;

i) wherein, the suction conduit forms a continuous air channel between at least one of the rotary agitators and the output port;

j) wherein, the hose wand is pivotally connected with respect to the housing and in communication with the continuous air channel, whereby dirt and dust agitated by the rotary agitators can be removed from the power head through the hose wand;

k) wherein, the front and rear rotary agitators rotate in opposite directions when powered by the power transfer means, and

l) wherein, the adjustment means provides a net traction force in the direction of the front portion of the housing when the user is pushing the hose wand forward and wherein the net traction force is in the direction of the rear portion of the housing when the user is pulling backward on the hose wand, whereby the vacuum cleaner power head provides a self-propelled function.]

[**12**. The vacuum cleaner power head in claim **11**, further including;

a suction fan connected to the electric motor for producing a suction airflow; and

a dirt collection bag connected to the hose wand;

wherein, the suction conduit defines a continuous air channel from at least one of the rotary agitators, through the suction fan, and into the hose wand, and

wherein the hose wand communicates the suction airflow between the output port and the dirt collection bag, whereby dirt sucked up by the suction airflow is carried to the dirt collection bag.]

[**13**. The vacuum cleaner power head in claim **11**, wherein,

said adjustment means moves both front and rear rotary agitators with respect to the housing and around an axis between the agitators to provide said self-propelled function.]

[**14**. The vacuum cleaner power head in claim **11**, wherein,

said front and rear rotary agitators are both mounted substantially in the front portion of the vacuum cleaner power head.]

[**15**. The vacuum cleaner power head in claim **11**, wherein,

the rotary agitators and the housing are fixed in relationship to each other, wherein the adjustment means pivots the housing and the rotary agitator with respect to the surface to adjust the net traction force for propelling the vacuum cleaner power head forward and backward.]

[**16**. The vacuum cleaner power head for cleaning a surface, comprising:

a) a housing having a front and rear portion;

b) a hose wand pivotally mounted to the vacuum cleaner power head;

c) an electric motor;

d) a suction fan mechanically driven by the electric motor;

e) a front rotary agitator and a rear rotary agitator, both rotatably mounted to a fixed position on the housing;

f) a power transfer means for transferring rotary power from the electric motor to the front and rear rotary agitators, wherein the two rotary agitators rotate in opposite directions;

g) a suction conduit designed to accept a hose wand, wherein the suction conduit defines a continuous air channel from at least one of the rotary agitators, through the suction fan, and out of the vacuum cleaner power head through the hose wand, whereby dirt and dust agitated by the rotary agitators can be removed from the vacuum cleaner power head through the hose wand and into a dirt collection means connected to the hose wand, and

h) an adjustment means defined on the vacuum cleaner power head and responsive to force applied to the hose wand by a user for adjusting the relative position of the front and rear rotary agitators with respect to the surface;

i) wherein, the front and rear rotary agitators rotate in opposite directions when powered through the power transfer means, and

j) wherein the adjustment means provides a net traction force in the direction of the front portion of the housing when the user is pushing the hose wand forward and the net traction force is in the direction of the rear portion of the housing when the user is pulling backward on the hose wand, whereby the vacuum cleaner power head provides a self-propelled function.]

[**17**. The vacuum cleaner power head in claim **16**, wherein, the electric motor, suction fan, and front and rear rotary agitators are all mounted at a substantially fixed location within the vacuum cleaner power head, whereby the adjustment of the relative positions of the front and rear portions of the housing, also adjusts the relative positions of the front and rear rotary agitators with respect to the surface.]

[**18**. The vacuum cleaner power head in claim **17**, wherein, the adjustment means comprises by a support wheel comprising a pivot bearing mounted to the vacuum cleaner power head, wherein the vacuum cleaner power head pivots around the pivot bearing relative to the surface for adjusting the relative position of the front and rear rotary agitators with respect to the surface.]

19. A power head for a surface cleaning apparatus, the power head comprising:

a housing;

an agitator assembly having rotary agitators;

an electric motor coupled to the rotary agitators for rotating the rotary agitators; and

an adjustment member associated with the housing and the agitator assembly, the adjustment member configured to change a position of the agitator assembly by pivoting the housing when the housing is pushed by a user to generate a net traction force from the rotary agitators on a surface, wherein the net traction force is in at least one of a first direction when the housing is pushed in the first direction to cause the adjustment member to move and pivot the housing toward the first direction or in an opposite second direction when the housing is pushed in the second direction to cause the adjustment member to move and pivot the housing toward the second direction.

20. The power head of claim 19, further comprising a handle pivotally coupled with the housing, the handle configured to be moved by a user to pivot the housing in the first direction or the second direction, wherein the adjustment member at least one of pivots the housing in the first direction when the user engages the handle to push the housing in the first direction or pivots the housing in the second direction when the user engages the handle to push the housing in the second direction.

21. The power head of claim 19, wherein the adjustment member is configured to raise at least one of the rotary agitators to generate the net traction force when the adjustment member moves on the surface.

22. The power head of claim 19, wherein relative positions of the housing and the rotary agitators remain substantially constant as the adjustment member moves to change a direction of the net traction force.

23. The power head of claim 19, wherein the adjustment member comprises a wheel rotatably mounted in the housing,, the wheel configured to at least partially roll on the surface to raise or lower one or more of the rotary agitators when the net traction force is changed.

24. A surface cleaning apparatus comprising:

a housing;

a handle coupled to the housing;

agitator brushes configured to engage a surface as the housing moves relative to the surface;

a motor operatively coupled with the agitator brushes to rotate the agitator brushes; and

an adjustment member associated with the housing and the agitator brushes, the adjustment member configured to pivot the housing to change a position of at least one of the agitator brushes to generate a net traction force on the surface when the handle is pushed to move the adjustment member on the surface, wherein the net traction force is in at least one of a first direction when the handle is pushed in the first direction or in an opposite second direction when the handle is pushed in the second direction, the handle configured to cause the adjustment member to pivot the housing in at least one of the first direction when the handle is pushed in the first direction or the second direction when the handle is pushed in the second direction.

25. The surface cleaning apparatus of claim 24, wherein the handle is configured to be pushed by a user to move the housing in the first direction or the second direction, and wherein the adjustment member is operatively coupled with the handle such that pushing the handle in the first direction or the second direction moves the adjustment member in the corresponding first direction or second direction and causes the adjustment member to rotate the housing toward the corresponding first direction or second direction.

26. The surface cleaning apparatus of claim 24, wherein the adjustment member raises at least one of the agitator brushes to generate the net traction force when the adjustment member moves on the surface.

27. The surface cleaning apparatus of claim 24, wherein relative positions of the housing and the agitator brushes remain substantially constant as the adjustment member moves to change a direction of the net traction force.

28. The surface cleaning apparatus of claim 24, wherein the adjustment member comprises a wheel rotatably mounted to the housing, the wheel at least partially rolling on the surface to raise or lower one or more of the agitator brushes to change the net traction force.

29. A method comprising:

coupling an agitator assembly with a motor, the agitator assembly including rotary agitators and at least partially disposed in a housing of a surface cleaning apparatus, the motor configured to rotate the rotary agitators; and

coupling an adjustment member with the housing and the agitator assembly, the adjustment member configured to change a position of the agitator assembly by pivoting the housing when the housing is pushed by a user to generate a net traction force from the rotary agitators on a surface,

wherein the net traction force is in at least one of a first direction when the housing is pushed in the first direction to cause the adjustment member to move and pivot the housing toward the first direction or in an opposite second direction when the housing is pushed in the second direction to cause the adjustment member to move and pivot the housing toward the second direction.

30. The method of claim 29, further comprising pivotally coupling a handle with the housing such that the handle is configured to be moved by a user to pivot the housing in the first direction or the second direction, wherein the adjustment member at least one of pivots the housing in the first direction when the user engages the handle to push the housing in the first direction or pivots the housing in the second direction when the user engages the handle to push the housing in the second direction.

31. The method of claim 29, wherein coupling the adjustment member includes connecting the adjustment member with the agitator assembly such that the adjustment member is configured to raise at least one of the rotary agitators to generate the net traction force when the adjustment member moves on the surface.

32. The method of claim 29, wherein coupling the adjustment member includes connecting the adjustment member with the housing and the agitator assembly such that relative positions of the housing and the rotary agitators remain substantially constant as the adjustment member moves to change a direction of the net traction force.

33. The method of claim 29, wherein coupling the adjustment member includes rotatably mounting a wheel in the housing that is configured to at least partially roll on the surface to raise or lower one or more of the rotary agitators when the net traction force is changed.

34. A method comprising:

coupling a handle to a housing of a surface cleaning apparatus;

coupling a motor with agitator brushes that are configured to engage a surface as the housing moves relative to the surface, the motor coupled with the agitator brushes in order to rotate the agitator brushes; and

coupling an adjustment member with the housing and the agitator brushes such that the adjustment member is configured to pivot the housing to change a position of at least one of the agitator brushes to generate a net traction force on the surface when the handle is pushed to move the adjustment member on the surface,

wherein the net traction force is in at least one of a first direction when the handle is pushed in the first direction or in an opposite second direction when the handle is pushed in the second direction, the handle configured to cause the adjustment member to pivot the housing in at least one of the first direction when the handle is pushed in the first direction or the second direction when the handle is pushed in the second direction.

35. The method of claim 34, wherein coupling the handle includes coupling the handle to the housing such that the handle is configured to be pushed by a user to move the housing in the first direction or the second direction, and wherein coupling the adjustment member includes coupling the adjustment member with the handle such that pushing the handle in the first direction or the second direction moves the adjustment member in the corresponding first direction or second direction and causes the adjustment member to rotate the housing toward the corresponding first direction or second direction.

36. The method of claim 34, wherein coupling the adjustment member includes coupling the adjustment member to the agitator brushes such that the adjustment member raises at least one of the agitator brushes to generate the net traction force when the adjustment member moves on the surface.

37. The method of claim 34, wherein coupling the adjustment member includes coupling the adjustment member with the housing and the agitator brushes such that relative positions of the housing and the agitator brushes remain substantially constant as the adjustment member moves to change a direction of the net traction force.

38. The method of claim 34, wherein coupling the adjustment member includes rotatably mounting a wheel to the housing such that the wheel at least partially rolls on the surface to raise or lower one or more of the agitator brushes to change the net traction force.

* * * * *