(12) INTERNATIONAL APPLICATION PUBLISHED UNDER THE PATENT COOPERATION TREATY (PCT)

(19) World Intellectual Property Organization
International Bureau

(43) International Publication Date
7 May 2009 (07.05.2009)

PCT

(10) International Publication Number
WO 2009/058437 A1

(51) International Patent Classification:
B26B 21/04 (2006.01) *B23P 15/28* (2006.01)

(21) International Application Number:
PCT/US2008/069580

(22) International Filing Date: 10 July 2008 (10.07.2008)

(25) Filing Language: English

(26) Publication Language: English

(30) Priority Data:
60/983,261 29 October 2007 (29.10.2007) US

(71) Applicant *(for all designated States except US)*: **EVEREADY BATTERY COMPANY, INC.** [US/US]; 533 Maryville University Drive, St. Louis, Missouri 63141 (US).

(72) Inventors; and
(75) Inventors/Applicants *(for US only)*: **PINCHUK, Walter, T.** [US/US]; 79 Alison Avenue, Naugatuck, Connecticut 06770 (US). **ROCKWELL, Douglas, E.** [US/US]; 407 Matthew Street, Prospect, Connecticut 06712 (US).

(74) Agent: **MICHAUD, Richard**; Michaud-Duffy Group LLP, 306 Industrial Park Road, Suite 206, Middletown, Connecticut 06457 (US).

(81) Designated States *(unless otherwise indicated, for every kind of national protection available)*: AE, AG, AL, AM, AO, AT, AU, AZ, BA, BB, BG, BH, BR, BW, BY, BZ, CA, CH, CN, CO, CR, CU, CZ, DE, DK, DM, DO, DZ, EC, EE, EG, ES, FI, GB, GD, GE, GH, GM, GT, HN, HR, HU, ID, IL, IN, IS, JP, KE, KG, KM, KN, KP, KR, KZ, LA, LC, LK, LR, LS, LT, LU, LY, MA, MD, ME, MG, MK, MN, MW, MX, MY, MZ, NA, NG, NI, NO, NZ, OM, PG, PH, PL, PT, RO, RS, RU, SC, SD, SE, SG, SK, SL, SM, ST, SV, SY, TJ, TM, TN, TR, TT, TZ, UA, UG, US, UZ, VC, VN, ZA, ZM, ZW.

(84) Designated States *(unless otherwise indicated, for every kind of regional protection available)*: ARIPO (BW, GH, GM, KE, LS, MW, MZ, NA, SD, SL, SZ, TZ, UG, ZM, ZW), Eurasian (AM, AZ, BY, KG, KZ, MD, RU, TJ, TM), European (AT, BE, BG, CH, CY, CZ, DE, DK, EE, ES, FI, FR, GB, GR, HR, HU, IE, IS, IT, LT, LU, LV, MC, MT, NL, NO, PL, PT, RO, SE, SI, SK, TR), OAPI (BF, BJ, CF, CG, CI, CM, GA, GN, GQ, GW, ML, MR, NE, SN, TD, TG).

Published:
— *with international search report*

(54) **Title:** RAZOR BLADE AND METHOD OF MANUFACTURE

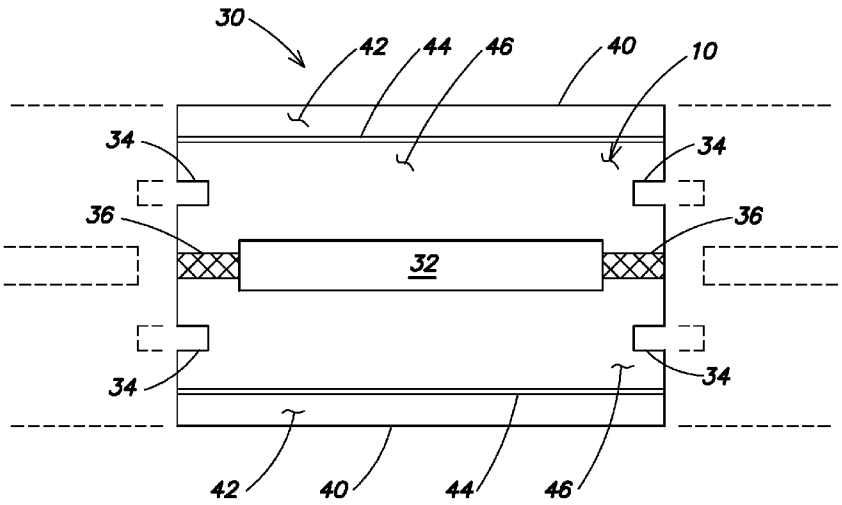

FIG. 2

(57) **Abstract:** An elongated flat strip of stainless steel material for use in manufacturing razor blades is provided with an elongated weakened portion. A cutting edge is subsequently provided along one elongated edge of the strip. The weakened portion is between the cutting edge and an opposed edge. A blade portion is between the cutting edge and the weakened portion and a removable portion is between the weakened portion and the opposed edge. The weakened portion is provided by a) bending and flattening a portion of the strip in a progressive perforation tool to cause localized intergranular cleavage, and b) hardening the strip to oxidize the exposed (cleaved) grain boundaries.

WO 2009/058437 A1

Razor Blade and Method of Manufacture

BACKGROUND OF THE INVENTION

TECHNICAL FIELD

This invention relates generally to manufacturing processes for razor blades, and more specifically to methods of imparting one or more weakened areas to razor blades.

BACKGROUND

Many modern safety razors include a disposable razor cartridge adapted to be selectively connected to a reusable handle by connecting structure therebetween. The cartridge includes a housing having at least one razor blade with a sharpened cutting edge disposed therein. Other modern safety razors include a razor cartridge permanently connected to the handle that can be disposed of as a single unit.

Razor blades are typically made from a continuous strip of stock material that is hardened and sharpened while the strip travels along a processing line. The strip is then divided in blade length sections used in manufacture of individual cartridges.

In some applications, blades are supported on respective bent supports that are mounted in the cartridge housing. To enable the supported blades to move up and down within the housing during shaving and /or to provide efficient rinsing of shaving debris from between adjacent supported blades it is desirous that the blades have a small dimension from the cutting edge to the back edge.

In U.S. Patent number 6,629,475 to Neamtu et al., the disclosure of which is incorporated for reference herein in its entirety, a razor blade having a removable portion is provided to facilitate efficient handling, processing and attachment of the razor blade to its support. The removable portion and razor blade are connected at a weakened portion provided to allow the removable portion to be easily removed after the razor blade has been attached to its support. The ‘475 patent discloses a method of using rolling apparatus to provide the weakened portion. The rolling apparatus creates an offset between the razor blade portion and the removable portion as depicted e.g. in Fig. 4 therein.

In U.S. Patent application publication 2007/0163390, another rolling apparatus is disclosed that reduces the strip thickness of the razor blade and partially or fully flattens an aforementioned offset.

In U.S. Patent application publication 2006/0000526, apparatus is disclosed to provide a weakened portion for a razor blade using thermal energy, preferably by a laser, to provide an elongated groove in one side of the strip.

SUMMARY

The present invention has for its objective to eliminate, or at least substantially alleviate the limitations of the prior art manufacturing processes for razor blades. The invention is directed particularly to a method of manufacturing razor blades having a weakened portion. The method comprises the steps of:

a) providing an elongated flat strip of stainless steel. The strip has a generally rectangular cross section comprising an upper surface; a lower surface and first and second opposed edges each extending along the length of the elongated strip;

b) passing the strip through a progressive perforation tool to cause an elongated portion of the strip adjacent the first edge to be bent to an acute angle relative to a body portion of the strip about a local irregularity portion; and subsequently flattening the bent portion;

c) hardening the strip;

d) sharpening the first edge to provide an elongated cutting edge; and

e) separating the strip into individual razor blades.

The weakened portion is created in the vicinity of the local irregularity. The bending and the flattening operations cause intergranular cleavage at the irregularity and the hardening process causes grain boundary oxidation in the vicinity of the cleaved (exposed) grain boundaries to create a fracture initiation site.

In another aspect the present invention features a razor blade having a weakened portion. The weakened portion comprises fracture initiation sites as previously described. The razor blade has a cutting edge, an opposed second edge. The weakened portion is between the cutting edge and the opposed second edge. A blade portion is between the cutting edge portion and the weakened portion and a removable portion is between the weakened portion and the opposed second edge. The razor blade is attached to a bent support and the removable portion is removed by bending about the weakened portion. One or more razor blades on their respective supports are mounted in a housing to provide a razor cartridge.

Embodiments of the invention have the following advantages. Use of a process to provide a weakened portion permits the use of softer and /or thinner blade materials that

otherwise could not be easily separated by bending alone. Use of the process(es) defined herein provides manufacturing advantages.

The above features and advantages of the present invention will be more fully understood with reference to the following detailed description when taken in conjunction with the accompanying drawings.

BRIEF DESCRIPTION OF THE DRAWINGS

Fig. 1 is a sectioned isometric view of strip material for a razor blade.

Fig. 2 is a plan view of an embodiment of part-processed strip material for a razor blade.

Fig. 3 is a plan view of another embodiment of part-processed strip material for a razor blade.

Fig. 3A is a sectional view along lines 3A-3A of Fig. 3.

Figs. 4A-4D are partial sectional views of strip material for a razor blade in stations of a progressive perforation tool.

Fig. 5 is an enlarged sectional view of a part of Fig. 3A showing a weakened portion of the strip material.

DETAILED DESCRIPTION

Referring to Fig. 1, stainless steel strip material 10 that is subsequently converted into razor blades is provided in elongated form 12. The strip preferably has a generally rectangular cross section having a width 14 and a thickness 16. The strip has upper and lower surfaces 20, 22 respectively and opposed edges 24, 26. The thickness 16 of the strip is preferably about 0,05mm to 0,2mm thick, more preferably 0,075-0,1mm and most preferably about 0,076mm thick. The width of the strip 14 is sufficient to suit conversion processes that can be so-called single edge or double edge processes (as will be described later) and can be between about 2.5mm to about 20mm or more wide to suit the specific application.

The hardness of the stainless steel strip is less than about 550HV and preferably about 280-460HV and the strip has a composition preferably 0.65-0.72% C; 12.7-13.9% Cr; 0.45-0.75% Mn; 0.15-0.5% Si; 0-0.5% Ni; 0-0.02% S; 0-0.025% P; balance substantially Fe. The present invention is not limited to strip of the aforementioned hardness and composition and other stainless steel materials including those disclosed for example in U.S. Patents number 5,275,672 and 5,433,801 both to Althaus et al.; U.S. Patent application publication

2007/0,137,050 to Xu et al. and European Patent application EP 1,739,199 A1 to Millward may be employed.

Referring additionally to Fig. 2, a plan view of a part-converted razor blade of a double edge process 30 is shown. The strip material 10 is perforated in continuous strip form to provide an elongated center slot 32 used to support or locate the blade strip during subsequent processes such as edge forming and edge coating. The strip material can also be perforated to provide location holes 34 that can be used to index the strip or to locate an individual razor blade relative to its respective support during attachment thereto. The strip has a splitting portion 36 adjacent to and extending longitudinally from the center slot where the razor blade can be split to convert the "double edge" razor blade to two blades of "single edge" form. The razor blade in double edge form has cutting edges 40, razor blade portions 42, weakened portions 44 and removable portions 46. Adjacent part converted razor blades in the elongated continuous strip are shown in dotted line.

Referring additionally to Fig. 3, a plan view of a part-converted razor blade of a single edge process 50 is shown. The razor blade is substantially similar to the razor blade of the double edge process described above except the center slot is omitted and the splitting process is unnecessary. The single edge razor blade can be formed from strip of a narrower width than a double edge blade. The razor blade can have perforated location holes 34. The razor blade has a cutting edge 40, a razor blade portion 42, a weakened portion 44 and a removable portion 46.

The process to provide a weakened portion 44 will now be described in more detail. This will be described in relation to a single edge process however the process steps can equally be applied to a double edge process and the present invention is not limited in this regard. Referring now to Figs 4A-4D, partial sectional views of the strip in stations of a progressive perforation tool are shown. By providing these stations in the progressive tool in addition to conventional perforation stations the process of providing a weakened portion to the razor blade is accomplished without additional process steps such as rolling or thermal energy grooving as described in the background section of the present application. Furthermore, after subsequent conversion process(es) the weakened portion has a beneficial grain structure as will be described later in the present application. This beneficial grain structure facilitates removal of the removable portion. At the station depicted in Fig. 4A the strip 10 is depicted introduced into an open progressive perforation tool 60. This station of the tool includes a punch 62 and a die 67. The punch has an elongated protrusion 64, preferably U shaped, more preferably V shaped. The protrusion is up to about 50 microns

high and preferably 33-43 microns high. A preferred V shaped protrusion has an included angle about 90 degrees and a tip radius less than about 15 microns, preferably less than 10 microns and most preferably 5-7 microns. The punch includes an elongated relief face 66 to accommodate a bent portion of the strip as described below. The opposed die has an elongated shallow groove 68, opposite the protrusion 64, so that an elongated portion of the strip material is locally unsupported. Referring now to Fig. 4B, the station of Fig. 4A is depicted shortly after the tool 60 has fully closed and impacted the strip 10 and the tool is depicted slightly open. The V shaped protrusion 64, in conjunction with the opposed grooved die 67 causes a local irregularity portion 70 to be formed in the locally unsupported portion of the strip and further causes a portion of the strip 74 to bend at an acute angle 76 relative to the body 78 of the strip. The elongated protrusion and groove each have a length sufficient to provide an irregularity along substantially the length of a part-converted razor blade. Referring now to Fig. 4C, a station subsequent to the station of Figs. 4A and 4B is shown in its open state. At this station the tool 60 includes a punch 80 with a preferably flat surface 84 and a die 82 with a preferably flat surface 86. Referring now to Fig. 4D, the station of Fig. 4C is depicted in its open state after the tool 60 has fully closed and impacted the strip. The station of Figs. 4C and 4D is provided to flatten the strip so that the bent portion 74 is aligned with the body portion 78. An elongated groove 90, residual from the irregularity, remains on the upper surface 20 of the strip. A small protrusion 92, residual from the irregularity, may be present on the lower surface 22 of the strip, however it is important that this protrusion is sufficiently small, if present, so that it does not interfere with the passage of the strip through guides in subsequent process(es). In order to ensure the strip is preferably completely flattened, if necessary a second flattening station can be provided in the progressive tool that can be identical to the flattening station previously described.

Referring now to Fig. 5, an enlarged sectional view of the strip in the vicinity of groove 90 is shown. It is important the bending process described above caused the strip material to go beyond its yield point in one or both areas 98. This results in intergranular cleavage in these areas. In a subsequent manufacturing process the strip is hardened in a process well known in the art to harden the strip preferably to about 750-850HV. In this hardening process, extensive oxidation of the exposed grain boundaries in areas 98 occurs which provides fracture initiation site(s) between adjacent cleaved and oxidized grain boundaries that provide the aforementioned weakened portion. In more further well known manufacturing process(es) a cutting edge 40 is provided; the strip is separated into individual razor blade lengths and suitable coatings can be applied to the cutting edge. The razor blade

is attached to a bent support by a suitable means such as laser spot welding as disclosed in U.S. Patent number 4,379,219 to Behrens et al. The removable portion is bent relative to the razor blade portion causing a fracture to occur at the weakened portion detaching the removable portion. One or more such razor blades on respective supports are mounted in a housing to provide a razor cartridge as disclosed in the aforementioned '475 Patent.

Use of a process to provide a weakened portion permits the use of softer and /or thinner blade materials that otherwise could not be easily separated by bending alone. Use of the process(es) defined herein provides manufacturing advantages.

Although the invention has been described and illustrated with reference to specific illustrative embodiments thereof, it is not intended that the invention be limited to those illustrative embodiments. Those skilled in the art will recognize that variations and modifications can be made without departing from the true scope of the invention as defined by the claims that follow.

CLAIMS:

What we claim is:

1. A method of manufacturing razor blades, each having a weakened portion, comprising the steps of:

providing an elongated flat strip of stainless steel having a generally rectangular cross section comprising an upper surface; a lower surface and first and second opposed edges each extending along the length of the elongated strip;

passing the strip through a progressive perforation tool to:

1) cause an elongated portion of the strip adjacent the first edge to be bent to an acute angle relative to a body portion of the strip about a local irregularity portion; and

2) flatten the strip to substantially align the portion thus bent with the body portion;

whereby one or both of the bending and the flattening operations causes intergranular cleavage in at least one portion of the irregularity portion;

hardening the strip;

whereby the hardening process causes grain boundary oxidation in the vicinity of the intergranular cleavage;

providing an elongated cutting edge on the first edge; and

separating the strip into individual razor blades;

wherein each razor blade has a cutting edge, an opposed second edge and a weakened portion between the cutting edge and the opposed second edge; a blade portion between the cutting edge portion and the weakened portion; and a removable portion between the weakened portion and the opposed second edge;

wherein the weakened portion comprises a fracture initiation site between adjacent cleaved and oxidized grain boundaries.

2. The method of claim 1, wherein the provided elongated flat strip of stainless steel has a hardness less than about 550HV.

3. The method of claim 2, wherein the provided elongated flat strip of stainless steel has a hardness between 280HV and 460HV.

4. The method of claim 1, wherein the progressive perforation tool includes a punch having an elongated protrusion that impacts the strip to cause an elongated portion of the strip adjacent the first edge to be bent to an acute angle relative to a body portion of the strip about a local irregularity portion.

5. The method of claim 4, wherein the elongated protrusion is V shaped.

6. The method of claim 4, wherein the progressive perforation tool includes a die having an elongated groove disposed opposite the elongated protrusion.

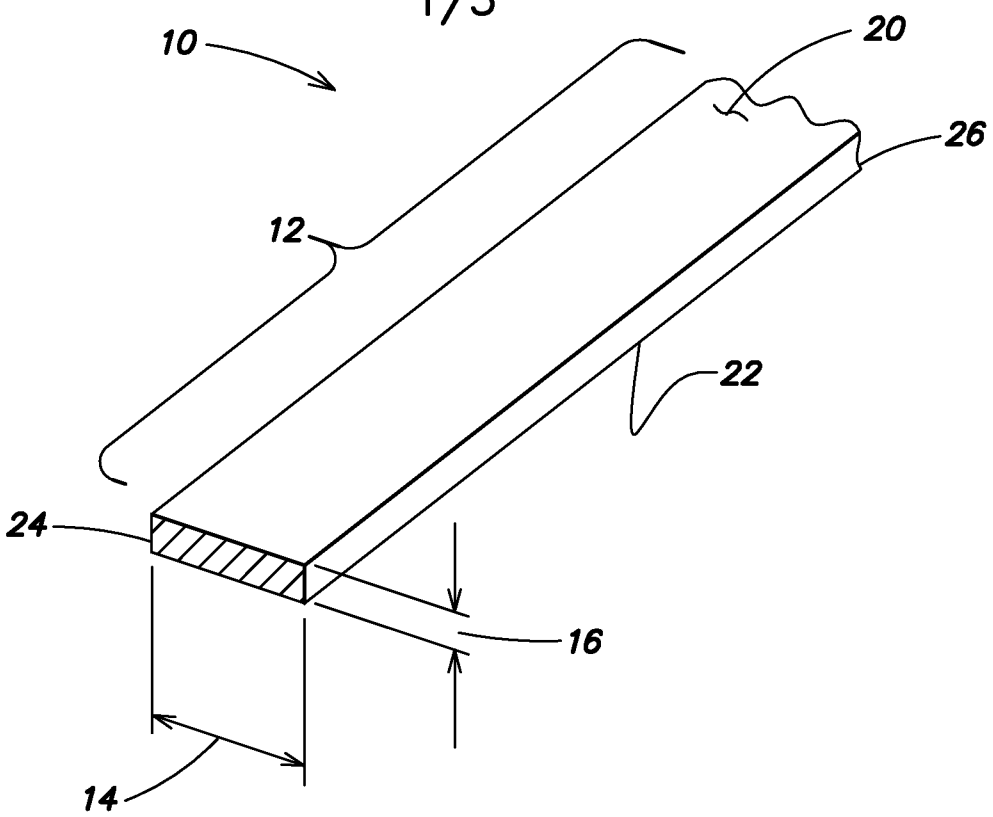
10
20
26
12
22
24
16
14

FIG. 1

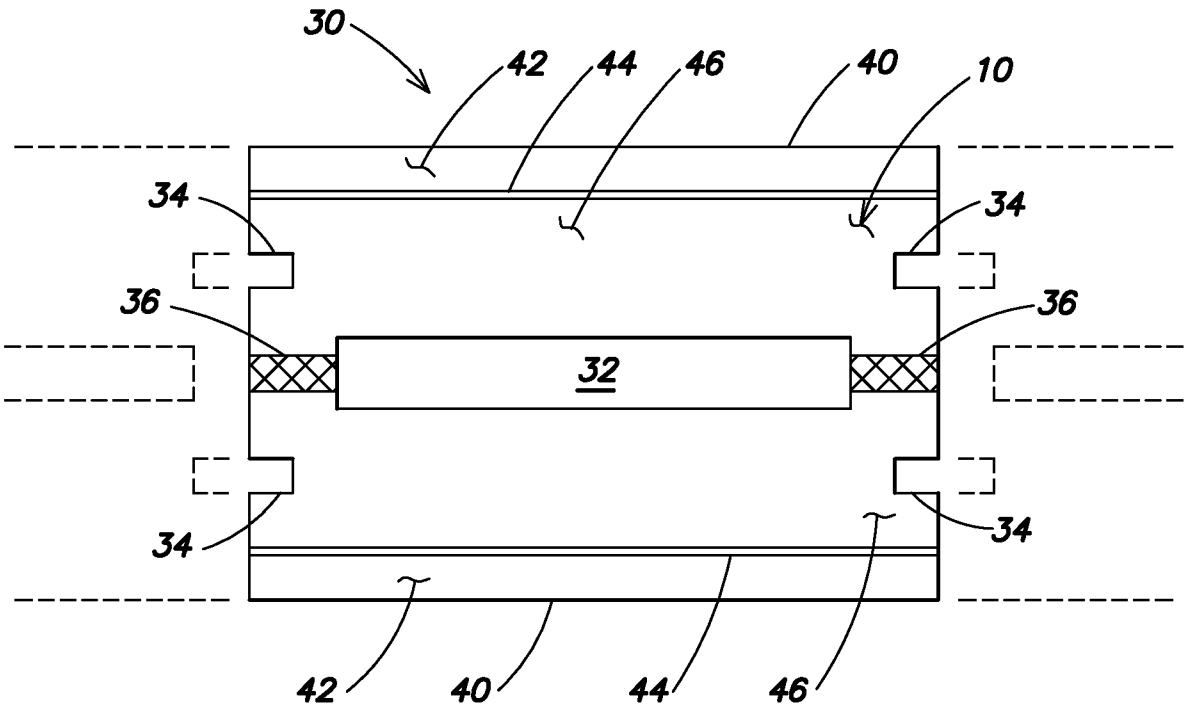
30
42
44
46
40
10
34
34
36
36
32
34
34
42
40
44
46

FIG. 2

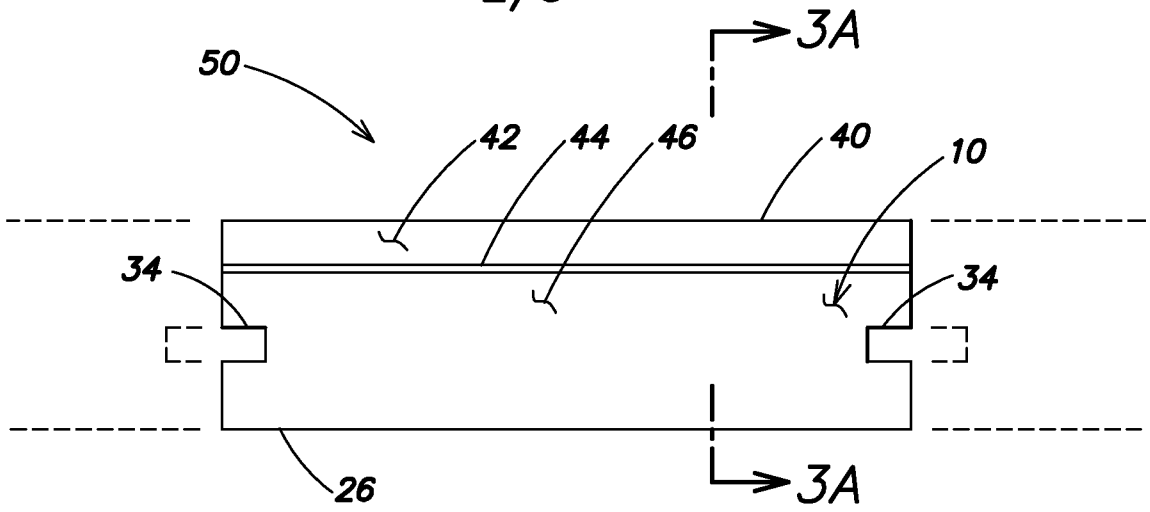

FIG. 3

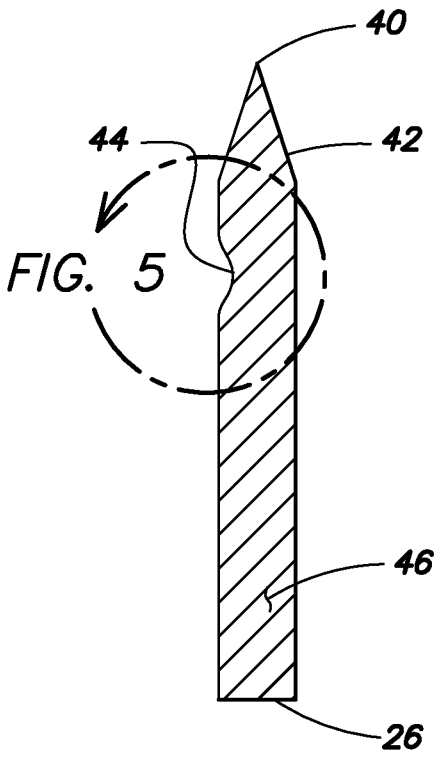

FIG. 5

FIG. 3A

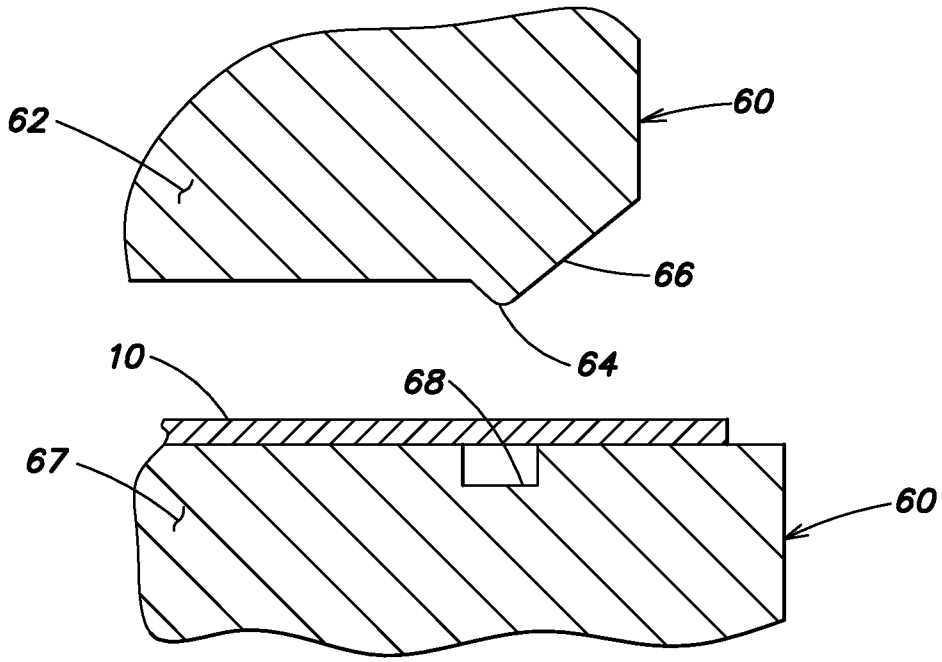

FIG. 4A

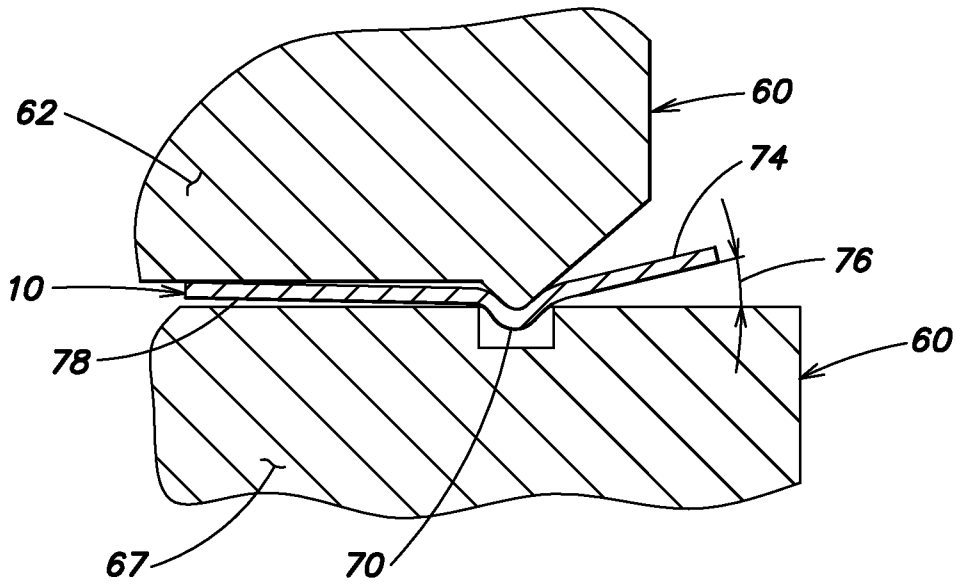

FIG. 4B

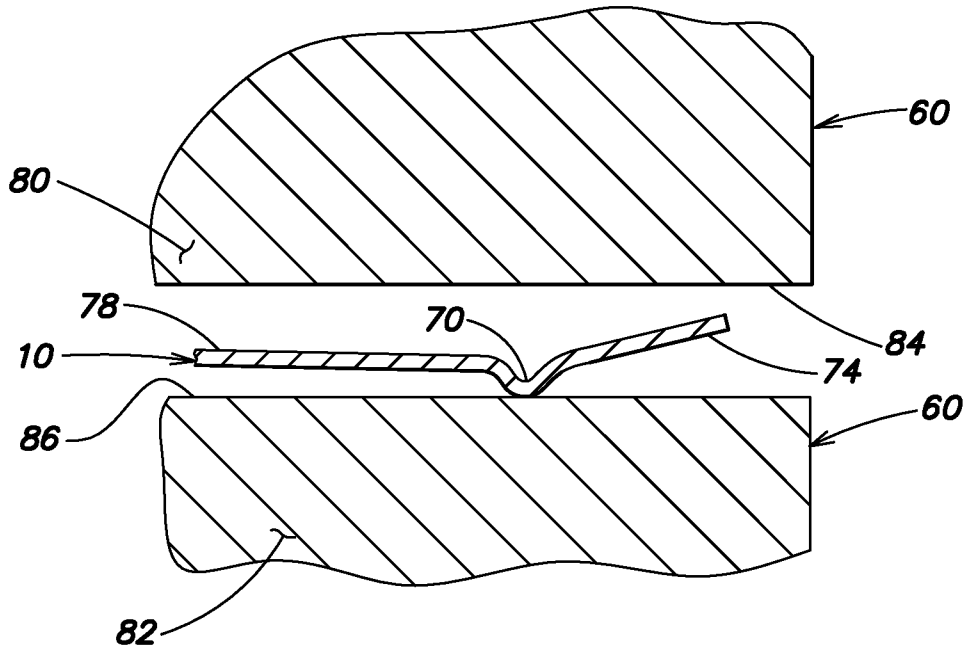

FIG. 4C

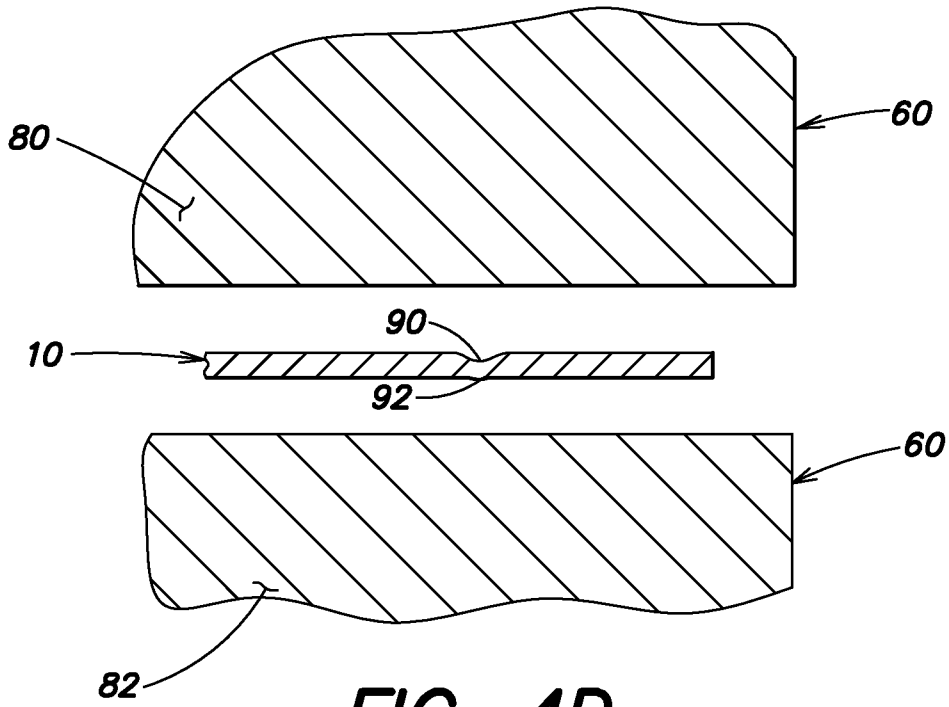

FIG. 4D

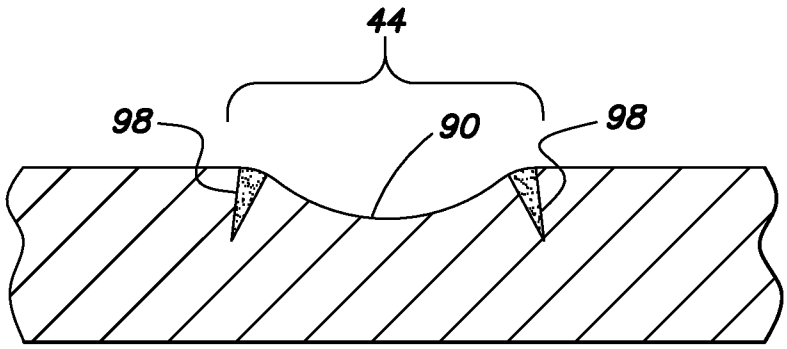

FIG. 5

INTERNATIONAL SEARCH REPORT

International application No.
PCT/US2008/069580

A. CLASSIFICATION OF SUBJECT MATTER

B26B 21/04(2006.01)i, B23P 15/28(2006.01)i

According to International Patent Classification (IPC) or to both national classification and IPC

B. FIELDS SEARCHED

Minimum documentation searched (classification system followed by classification symbols)

IPC 8 : B26B, B21K

Documentation searched other than minimum documentation to the extent that such documents are included in the fields searched

Korean Utility models and applications for Utility models since 1975

Japanese Utility models and applications for Utility models since 1975

Electronic data base consulted during the international search (name of data base and, where practicable, search terms used)

eKIPASS (KIPO internal) & keywords: "blade", "razor", "manufacturing" and "method"

C. DOCUMENTS CONSIDERED TO BE RELEVANT

Category*	Citation of document, with indication, where appropriate, of the relevant passages	Relevant to claim No.
A	US 6,629,475 B1 (NICOLAE NEAMTU et al) 7 October 2003 See column 3, Line 48. - Column 4, Line 42 . and Fig. 4.	1-6
A	US 2007/0089567 A1 (CHENG-JIH LI et al) 26 April 2007 See the abstract and Fig. 5.	1-6
A	US 5,609,075 A (NICOLAE NEAMTU) 11 March 1997 See column 4, Line 9. - Column 8, Line 4 . and Claim 1.	1-6

☐ Further documents are listed in the continuation of Box C.

☒ See patent family annex.

* Special categories of cited documents:

"A" document defining the general state of the art which is not considered to be of particular relevance

"E" earlier application or patent but published on or after the international filing date

"L" document which may throw doubts on priority claim(s) or which is cited to establish the publication date of citation or other special reason (as specified)

"O" document referring to an oral disclosure, use, exhibition or other means

"P" document published prior to the international filing date but later than the priority date claimed

"T" later document published after the international filing date or priority date and not in conflict with the application but cited to understand the principle or theory underlying the invention

"X" document of particular relevance; the claimed invention cannot be considered novel or cannot be considered to involve an inventive step when the document is taken alone

"Y" document of particular relevance; the claimed invention cannot be considered to involve an inventive step when the document is combined with one or more other such documents,such combination being obvious to a person skilled in the art

"&" document member of the same patent family

Date of the actual completion of the international search	Date of mailing of the international search report
26 NOVEMBER 2008 (26.11.2008)	**26 NOVEMBER 2008 (26.11.2008)**

Name and mailing address of the ISA/KR

Korean Intellectual Property Office
Government Complex-Daejeon, 139 Seonsa-ro, Seo-gu, Daejeon 302-701, Republic of Korea

Facsimile No. 82-42-472-7140

Authorized officer

HAN, JAE SEOB

Telephone No. 82-42-481-5439

INTERNATIONAL SEARCH REPORT

Information on patent family members

International application No.

PCT/US2008/069580

Patent document cited in search report	Publication date	Patent family member(s)	Publication date
US 6629475 B1	07.10.2003	AT 338594 T	15.09.2006
		AU 2001-280524 A8	30.01.2002
		BR 0112555 A	22.07.2003
		CA 2415565 A1	24.01.2002
		CN 1289226 C	13.12.2006
		CN 1443100 A	17.09.2003
		CN 1765567 A	03.05.2006
		DE 60122895 T2	05.04.2007
		EP 1301297 A2	16.04.2003
		EP 1301297 B1	06.09.2006
		EP 1690611 A2	16.08.2006
		EP 1690611 A3	23.08.2006
		ES 2272519 T3	01.05.2007
		JP 2004-510462 T	08.04.2004
		KR 10-2003-0087612	14.11.2003
		PA 03000455 A	06.06.2003
		RU 2005137515 A	27.02.2007
		RU 2278780 C2	27.06.2006
		RU 2302333 C2	10.07.2007
		TW 544389 B	01.08.2003
		TW 544389 A	01.08.2003
		WO 02-05984 A2	24.01.2002
US 2007-089567 A1	26.04.2007	CA 2626874 A1	03.05.2007
		EP 1940569 A2	09.07.2008
		KR 10-2008-0056741	23.06.2008
		WO 2007-049217 A2	03.05.2007
US 5609075 A	11.03.1997	AT 219399 T	15.07.2002
		AU 1995-21256 B2	03.10.1995
		AU 2125695 A	03.10.1995
		AU 701377 B2	28.01.1999
		BR 9507061 A	02.09.1997
		CA 2185118 A1	21.09.1995
		CN 1143922 A	26.02.1997
		DE 69527138 D1	25.07.2002
		DE 69527138 T2	02.01.2003
		EP 0750535 B1	19.06.2002
		ES 2174940 T3	16.11.2002
		IN 191134 A1	27.09.2003
		JP 09-510401	21.10.1997
		KR 10-1997-0701602	12.04.1997
		US 5458025 A	17.10.1995
		WO 95-24983 A1	21.09.1995