(12) UK Patent Application (19) GB (11) 2 248 202 (13) A

(43) Date of A publication 01.04.1992

(21) Application No 9114722.3

(22) Date of filing 08.07.1991

(30) Priority data
(31) 4030375 (32) 26.09.1990 (33) DE

(51) INT CL[5]
B24B 19/12

(52) UK CL (Edition K)
B3D DFCC D202
U1S S2037

(56) Documents cited
None

(58) Field of search
UK CL (Edition K) B3D DFCC DFCX
INT CL[5] B24B

(71) Applicant
Ernst Thielenhaus KG

(Incorporated in the Federal Republic of Germany)

Schwesterstrasse 50, D-5600 Wuppertal 2, Federal Republic of Germany

(72) Inventor
Martin Wolters

(74) Agent and/or Address for Service
Hulse & Co
Cavendish Buildings, West Street, Sheffield, S1 1ZZ, United Kingdom

(54) **Process and apparatus for finish grinding**

(57) A process for the finish grinding of the eccentric cam faces on the cams 2 in a camshaft 1, more particularly a vehicle engine camshaft, has the camshaft 1 driven at a constant rotary speed about its axis, and optionally also reciprocated in its axial direction. The finish grinding is effected with the aid of at least one finishing grindstone 5, which is urged under a prescribed contact pressure against the cam face. Within each revolution of the cam 2 the contact pressure is reduced by a certain decrement on reaching the peak of the cam 2. The decrement is so selected that the material removal rate becomes approximately constant over the entire cam periphery. Also described is an attachment for a finish grinding machine for carrying out the process.

Fig.1

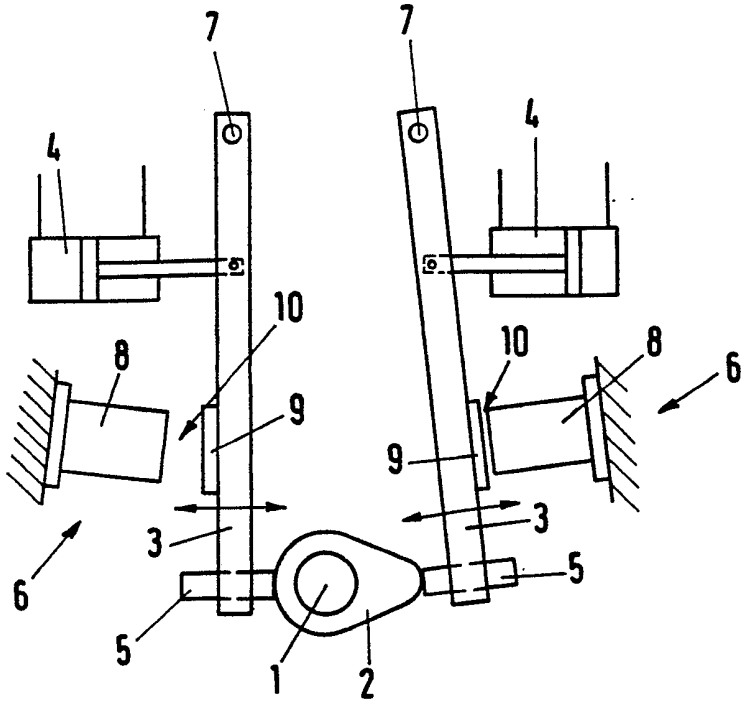

GB 2 248 202 A

Fig.1

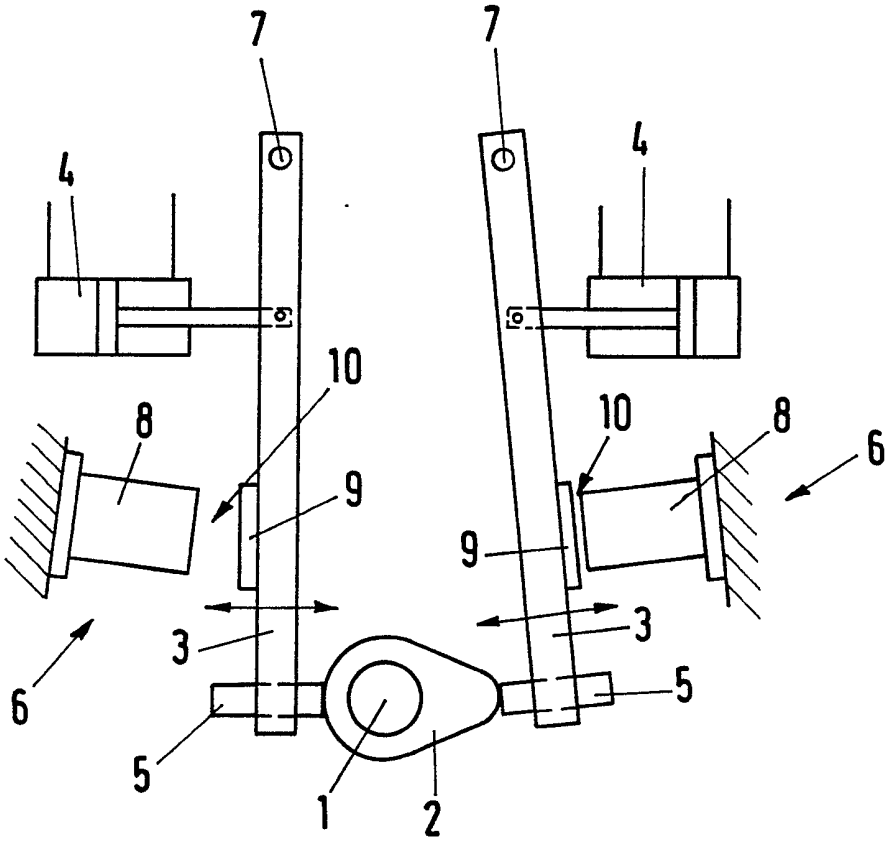

Fig.2

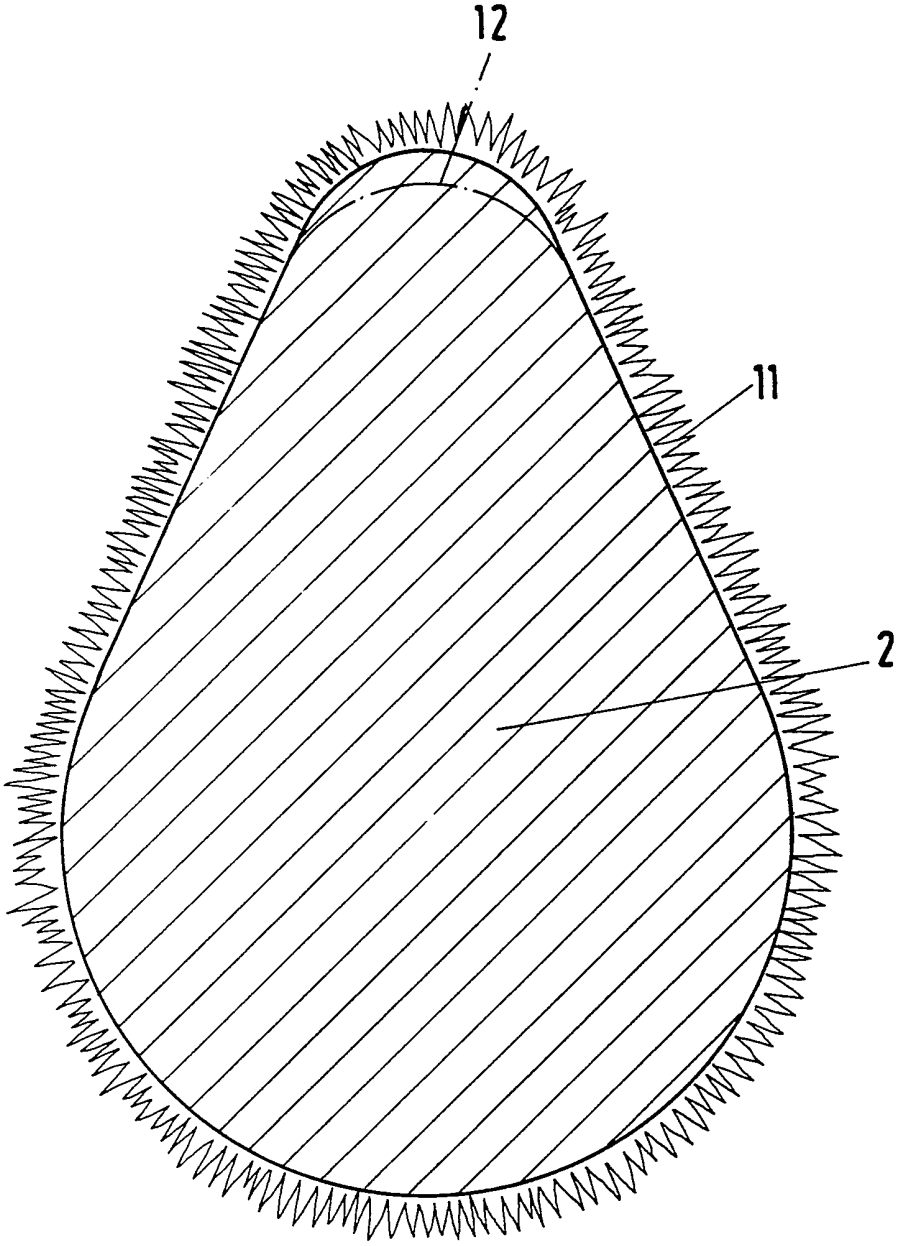

PROCESS AND APPARATUS FOR FINISH GRINDING

This invention relates to a process for the finish grinding of the eccentric cam faces on the cams in a camshaft, more particularly a vehicle engine camshaft, whereby the camshaft is driven at a constant rotary speed about its axis, and optionally also reciprocated in its axial direction, the finish grinding being effected with the aid of at least one finishing grindstone, which is urged under a prescribed contact pressure against the cam face. The invention further relates to an attachment to be mounted on a finish grinding machine for carrying out the said process. It is self-evident that the toolholder is advanced and retracted in conformity with the eccentricity of the cam face.

Within the prior art from which the invention arises, the prescribed contact pressure is held constant over the entire cam face. There is no contact pressure regulation as a function of the angular positions of the cam as the camshaft is rotated. Nevertheless, the prescribed contact pressure varies as a result of inertia forces set up by the reciprocatory motion of the toolholder. The effects are particularly pronounced in the sector within which the grindstone acts on the peak of the cam. The local material removal rate in this sector is also seriously excessive. In more detail, the features of the prior art can be described as follows:

When finish grinding the cam faces on the cams in a

camshaft, the grindstone is urged against the cam face undergoing grinding by mechanical or pneumatic means, at a prescribed contact pressure. The contact pressure is adjustable over a certain range as a means of regulating the grinding behaviour of the grindstone. There is no control over the contact pressure during each revolution. As the camshaft rotates during the grinding process, the dynamic effects cause the contact pressure to rise and fall. The contact pressure is further influenced during the grinding of cam faces by the effects of the variations in contact angle and radius of curvature. Experience demonstrates that the material removal rates under such grinding conditions are non-uniform. More particularly, much higher material removal rates are attained around the peak of the cam than on the base circle. The ratio between the removal rates at the peak of the cam and on the base circle is between 3 and 4 to 1, depending on the previous production stages, the cam geometry, the configuration of the finishing grindstone, the grinding speed and other variables. It is not infrequently found that because of these effects the form of the cam is less accurate after finish grinding than before.

One object of the invention is to provide a process for the finish grinding of the eccentric faces of the cams in a camshaft, more particularly a vehicle engine camshaft, whereby it is ensured that the material removal rate is approximately but adequately constant over the entire cam periphery. A further object of the invention is to provide a finish grinding machine attachment specifically adapted to

carrying out the process of the invention.

According to a first aspect of the present invention, there is provided a process for the finish grinding of the eccentric cam faces on the cams in a camshaft, more particularly a vehicle engine camshaft, whereby the camshaft is driven at a constant rotary speed about its axis, and optionally also reciprocated in its axial direction, the finish grinding being effected with the aid of at least one finishing grindstone, which is urged under a prescribed contact pressure against the cam face, and within each revolution of the cam the contact pressure is reduced by a certain decrement on reaching the peak of the cam, the decrement being so selected that the material removal rate becomes approximately constant over the entire cam periphery.

The invention arises from the surprising fact that the excessive material removal around the peak of the cam can be substantially completely avoided, if the contact pressure is sufficiently but not excessively reduced on approaching the cam peak. The precise magnitude of the decrement depends on the cam and grindstone geometries, the rotary speed and possibly other parameters, but can always be found without difficulty by trial and error. The same applies to the area in which the decrement is applied, and/or the reduction starts and ends. The surprising feature of the process of the invention is that it reduces or eliminates contour errors not only around the cam peak but also in other parts of the cam face.

The process of the invention must be controlled in

such a manner that the decrement is applied at the correct point in the cam peak area. The action may well start before the grindstone has actually reached the peak area. With the aid of modern electronic devices, control can easily be effected as a function of the angle of rotation adopted by the cam in question as the camshaft is rotated. It is self-evident that a controller of adequate capability is required, for example a computer-based system. However, in one preferred embodiment of the invention the contact pressure is adjusted autonomously with each revolution of the camshaft, by means characterised in that the contact pressure is adjusted by the cam face as a function of the eccentricity thereof. The contact pressure in this case can be adjusted mechanically, hydraulically or even pneumatically. In one preferred embodiment of the invention, it is adjusted magnetically.

According to a second aspect of the invention, there is provided a finish grinding machine attachment for carrying out the process as described, having at least one toolholder, an actuation and application device for the toolholder, and a finishing grindstone, in which the grindstone can be urged under a prescribed contact pressure against the cam face of a cam requiring grinding on a rotating camshaft, with the aid of the actuation and application device.

This aspect of the invention teaches that a contact pressure reducer is additionally attached to the toolholder, to be controlled by the cam itself during the grinding process. In an embodiment having a toolholder of the pivoted

lever type, the actuation and application device is attached on one side towards the pivot, and the contact pressure reducer on the other side, towards the grindstone. In a preferred embodiment of the invention, the contact pressure reducer consists of a magnet arrangement, the magnetic force of which acts through an adjustable intermediate air gap on the toolholder as it reciprocates in conformity with the eccentricity of the cam face. However, an alternative contact pressure reducer can consist of a spring arrangement having an adjustable spring characteristic, which acts on the toolholder as it reciprocates in conformity with the eccentricity of the cam face. The spring response can be damped. According to another proposal of the invention, the contact pressure reducer consists of a hydraulic pressure unit, which acts in the manner of the process of the invention on the toolholder as it reciprocates in conformity with the eccentricity of the cam face, for example by delivering a pressure pulse in the manner required to produce the prescribed decrement.

The invention will now be described in greater detail, by way of example, with reference to the accompanying drawings in which:-

Figure 1 is a schematic view of an attachment of the invention,

and

Figure 2 is a cross-sectional view, on a greatly enlarged scale, through a cam ground in accordance with the teaching of the invention.

The attachment shown in Figure 1 is mounted on a finish grinding machine. The camshaft 1 extends orthogonally below and above the plane of the drawing. It carries a plurality of cams 2 and rotates about its axis. It can additionally reciprocate in its axial direction. At least one toolholder 3 is provided for each cam 2, so that the toolholders 3 are aligned alongside the camshaft 1 undergoing grinding. In general, two toolholders 3 are provided for each cam 2, so as to avoid deformations of the camshaft under the contact pressure. The attachment also incorporates an actuation and application device 4 for the toolholder 3 and a finishing grindstone 5. These components are provided in pairs in the embodiment shown. The grindstone 5 can be urged under a prescribed contact pressure against the cam face of the cam 2 requiring grinding on the rotating camshaft 1, by means of the actuation and application device 4. A contact pressure reducer 6 is additionally attached to each toolholder 3. In the embodiment shown, it can be controlled by the cam 2 itself during the grinding process. The drawing shows the embodiment of an attachment of the invention having a toolholder 3 of the pivoted lever type, to which are attached the actuation and application device 4 on one side towards the pivot 7 and the contact pressure reducer 6 on the other side towards the grindstone 5. The contact pressure reducer 6 consists of a magnet arrangement 8,9. This magnet arrangement 8,9 acts through an adjustable intermediate air gap 10 on the toolholder 3 as it reciprocates in comformity with the eccentricity of the cam face. This is made clear in Figure 1

by the double arrows and the comparative situations of the toolholders 3 on the left and right respectively. The air gap 10 is adjustable, since the magnet 8 is secured to a magnet-holder which can itself be adjusted on the directions of the double arrows, thereby varying the width of the air gap 10. A ferromagnetic plate 9 on each of the toolholders 3 ineracts with the associated magnet 8.

During the grinding process, the camshaft 1 is driven at a constant rotary speed about its axis, and as already noted, can optionally also be reciprocated in its axial direction. The finish grinding process is carried out with the aid of at least one finishing grindstone 5, which is urged against the cam face under a prescribed contact pressure generated by the actuation and application device 4. Within each revolution of the cam 2 the contact pressure is reduced by a certain decrement on reaching the peak of the cam. This decrement can be varied by adjusting the magnet arrangement 8,9 and varying the breadth of the air gap 10. It is so selected that the material removal rate becomes approximately constant over the entire cam periphery.

The situation is further clarified by referring to Figure 2, which shows the periphery of a cam 2. An irregular zigzag line 11 indicates a surface roughness of 6 microns. The finish grinding process is intended to eliminate this surface roughness, without however seriously distorting the contour of the cam 2. By adopting the teachings of the invention, the contour indicated by the thickened line is preserved. Using the known prior art, the material removal

rate around the peak of the cam would be seriously excessive, producing the contour indicated by the broken line 12 and disadvantageously removing the material indicated by light cross-hatching.

CLAIMS

1. A process for the finish grinding of the eccentric cam faces on the cams in a camshaft, more particularly a vehicle engine camshaft, whereby the camshaft is driven at a constant rotary speed about its axis, and optionally also reciprocated in its axial direction, the finish grinding being effected with the aid of at least one finishing grindstone, which is urged under a prescribed contact pressure against the cam face, and within each revolution of the cam the contact pressure is reduced by a certain decrement on reaching the peak of the cam, the decrement being so selected that the material removal rate becomes approximately constant over the entire cam periphery.

2. A process as in Claim 1 wherein the contact pressure is adjusted by the cam face as a function of the eccentricity thereof.

3. A process as in Claim 1 or Claim 2, wherein the contact pressure is adjusted mechanically.

4. A process as in Claim 1 or Claim 2, wherein the contact pressure is adjusted hydraulically or mechanically.

5. A process as in Claim 1 or Claim 2, wherein the contact pressure is adjusted magnetically.

6. A process for the finish grinding of the eccentric cam faces on the cams in a camshaft substantially as hereinbefore described with reference to the accompanying drawings.

7. A finish grinding machine attachment for

carrying out the process as in Claim 1 or Claim 2, comprising

at least one toolholder,

an actuation and application device for the toolholder,

and

a finishing grindstone,

in which the grindstone can be urged under a prescribed contact pressure against the cam face of a cam requiring grinding on a rotating camshaft, with the aid of the actuation and application device, and a contact pressure reducer is additionally attached to the toolholder, to be controlled by the cam itself during the grinding process.

8. An attachment as in Claim 7, wherein, in an embodiment having a toolholder of the pivoted lever type, the actuation and application device is attached on one side towards the pivot, and the contact pressure reducer on the other side, towards the gindstone.

9. An attachment as in Claim 7 or Claim 8, wherein the contact pressure reducer consists of a magnet arrangement, the magnetic force of which acts through an adjustable intermediate air gap on the toolholder as it reciprocates in conformity with the eccentricity of the cam face.

10. An attachment as in Claim 7 or Claim 8, wherein the contact pressure reducer consists of a spring arrangement having an adjustable spring characteristic, which acts on the toolholder as it reciprocates in conformity with the eccentricity of the cam face.

11. An attachment as in Claim 7 or Claim 8, wherein

the contact pressure reducer consists of a hydraulic pressure unit, which acts on the toolholder as it reciprocates in conformity with the eccentricity of the cam face.

12. A finish grinding machine attachment for carrying out the process of any one of Claims 1 to 6, substantially as hereinbefore described with reference to the accompanying drawings.

atents Act 1977
Examiner's report to the Comptroller under Section 17 (The Search Report)

Application number 9114722.3

Relevant Technical fields

(i) UK Cl (Edition K) B3D (DFCC, DFCX)

(ii) Int Cl (Edition 5) B24B

Search Examiner

T W RICHENS

Databases (see over)

(i) UK Patent Office

(ii)

Date of Search

8.8.91

Documents considered relevant following a search in respect of claims 1-12

Category (see over)	Identity of document and relevant passages	Relevant to claim(s)
	NONE	

SF2(p)

2DEABG

Category	Identity of document and relevant passages	Relevant to claim(s)

Categories of documents

X: Document indicating lack of novelty or of inventive step.

Y: Document indicating lack of inventive step if combined with one or more other documents of the same category.

A: Document indicating technological background and/or state of the art.

P: Document published on or after the declared priority date but before the filing date of the present application.

E: Patent document published on or after, but with priority date earlier than, the filing date of the present application.

&: Member of the same patent family, corresponding document.

Databases: The UK Patent Office database comprises classified collections of GB, EP, WO and US patent specifications as outlined periodically in the Official Journal (Patents). The on-line databases considered for search are also listed periodically in the Official Journal (Patents).

Published 1992 at The Patent Office, Concept House, Cardiff Road, Newport, Gwent NP9 1RH. Further copies may be obtained from Sales Branch, Unit 6, Nine Mile Point, Cwmfelinfach, Cross Keys, Newport, NP1 7HZ. Printed by Multiplex techniques ltd, St Mary Cray, Kent.