March 14, 1961 F. H. KARG 2,975,389

POTENTIOMETER

Filed Jan. 19, 1960

FIG. 1.

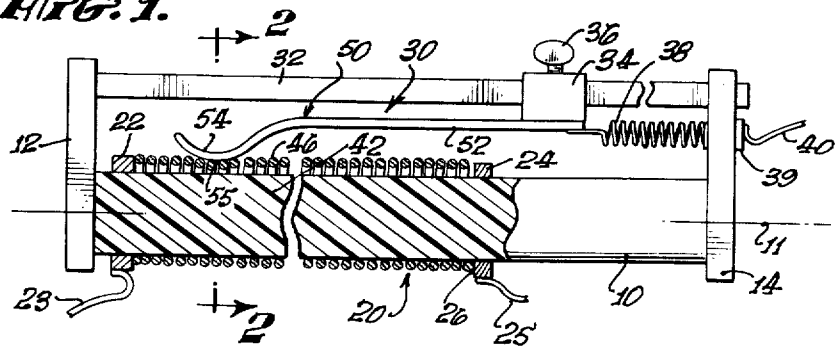

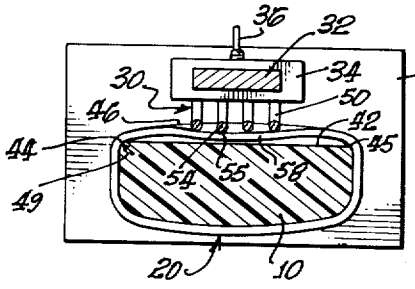

FIG. 2.

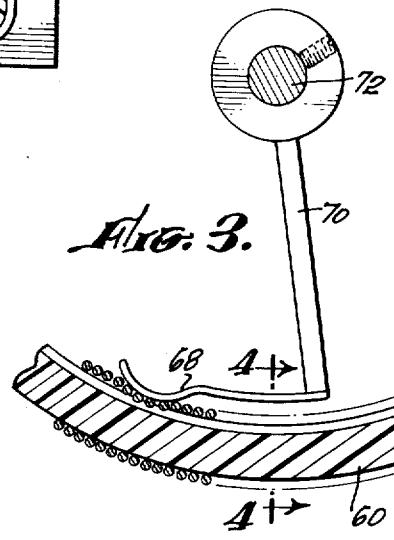

FIG. 3.

FIG. 4.

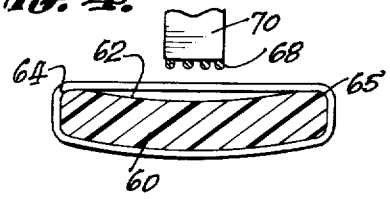

FRED H. KARG,
INVENTOR.

BY

Barlow & Lewis

United States Patent Office 2,975,389 Patented Mar. 14, 1961

2,975,389

POTENTIOMETER

Fred H. Karg, Burbank, Calif., assignor to Giannini Controls Corporation, Pasadena, Calif., a corporation of New York

Filed Jan. 19, 1960, Ser. No. 3,368

2 Claims. (Cl. 338—176)

This invention has to do generally with electrical potentiometers, and relates more particularly to wire wound precision potentiometers such as are typically employed to develop an electrical signal representing the position of a movable member.

A serious problem in previously available potentiometers for such purposes has been the tendency of the moving contact or brush to cause wear of the winding, leading to inaccuracy and unreliable operation. That problem is especially troublesome when the size and mass of a potentiometer must be held to an absolute minimum without sacrifice of accuracy, as is generally true in the aircraft and missile field, for example.

It has been generally recognized that the rate of wear of a potentiometer winding tends to vary directly with the brush pressure, so that it is highly advantageous to reduce the brush pressure to the minimum that is practicable. A further advantage in employing light brush pressure is that the friction, both at the brush and within the mechanism by which the brush is driven, is thereby reduced, so that less power is required to operate the potentiometer.

However, with potentiometers of previously available type, the brush pressure cannot ordinarily be reduced as much as would be desirable without causing serious difficulties. In particular, the output signal from the brush tends to become irregular and unreliable, due to such factors as varying contact resistance and actual bouncing of the brush as it moves over the individual turns of the winding.

I have discovered that the useful life of a potentiometer can be increased and the required driving power appreciably reduced by arranging the turns of the winding so that they are individually and resiliently deflected in responce to brush engagement. That novel structure and action has the result that the brush is yieldingly supported by each engaged winding turn. Thus, as the brush progresses from one turn to another it does not encounter any effectively rigid irregularities in the winding surface, as in conventional structures, but tends to float on a spring suspension. The sharp jolts previously encountered by the brush in passing from one turn to another are completely avoided, eliminating the primary cause of bouncing of the brush.

The smooth floating type of brush movement that is provided by the invention permits the brush pressure and also the brush mass to be greatly lightened without leading to irregularities of contact. That lighter contact directly causes a corresponding reduction in required power for driving the potentiometer. Moreover, the rate of wear of the resistive winding and of the contact surface of the brush is reduced, not only as a direct result of the lower contact mass and pressure, but also because the brush is no longer subject to sharp jolts from the rigidly supported winding turns of previous structures.

In order to take full advantage of the invention, as described above, I have found that it is desirable to utilize a plurality of individually mounted brush elements,

which are electrically connected in parallel and engage the resistive winding at laterally spaced points. An engaged turn of the winding is ordinarily engaged simultaneously by all of the brush elements. However, if the contact of one of the elements should for any reason be imperfect, a continuously effective signal will nevertheless be developed from the other elements. Whereas it has previously been proposed to employ a plurality of brush elements in connection with a conventional potentiometer winding, the manner of action of a multiple brush is quite distinct when combined with my novel form of winding structure, leading to greatly increased utility and effectiveness. In particular, I have found that the degree of deflection of a winding turn in response to brush engagement is typically different at the respective positions of the several brush elements. In spite of that difference in deflection, the various brush elements, being effectively independently mounted, are able to accommodate to the varying level of the winding and provide effectively continuous engagement along an appreciable length of the winding turn. No such continuous engagement would be possible with a single brush of corresponding width because of the varying deflection of the winding.

A full understanding of the invention, and of its further objects and advantages, will be had from the following description of certain illustrative manners in which it can be carried out. The particulars of that description, as of the accompanying drawings which form a part of it, are intended only as illustration of the invention, and not as a limitation upon its scope, which is defined in the appended claims.

In the drawings:

Fig. 1 is a longitudinal section, representing an illustrative linear potentiometer in accordance with the invention;

Fig. 2 is a transverse section on line 2—2 of Fig. 1;

Fig. 3 is a fragmentary transverse section of an illustrative rotary potentiometer in accordance with the invention; and

Fig. 4 is a section on line 4—4 of Fig. 3.

In the illustrative embodiment shown in Figs. 1 and 2, an elongated winding support or card is represented at **10** with axis **11**, mounted on the two end frames **12** and **14**. Support **10** is typically formed of insulative material, as shown, but may comprise a metal core coated with a layer of dielectric material. A winding **20** is helically wound on support **10** between two terminal clamps indicated at **22** and **24**, to which respective terminal leads **23** and **25** may be connected in the usual manner. The opposite ends of winding **20** are electrically and mechanically connected to clamps **22** and **24** as by soldering, indicated at **26**.

Brush means, represented generally at **30**, are mounted in any suitable manner that provides movement longitudinally of winding **10**. As illustratively shown, a brush carrying guide rod **32** is mounted on end frames **12** and **14**, parallel to winding axis **11**. A brush carrier **34** is mounted on rod **32** for longitudinal sliding movement, rotation of the carrier about the rod axis being prevented in any suitable manner, as by forming the rod of rectangular section, for example, as illustrated. Suitable means of any desired type are provided for driving the longitudinal movement of the brush carrier **34**, such means being represented schematically in the drawings as the handle **36**. An output connection from the brush means may be made via a light and highly flexible wire, as indicated at **38**, which is connected to an output terminal **39**, mounted in insulated relation on end frame **14**.

In accordance with one aspect of the present invention, winding support **10** has a substantially flat surface **42**, which extends parallel to axis **11** and is laterally bounded by the relatively sharp edge portions **44** and **45**, as shown

best in Fig. 2. Other surfaces of support **10** may similarly be essentially flat, and may meet at definite edges, if desired; but are illustratively shown as convexly curved, with well rounded edge areas. The resistive winding **20** comprises wire that is somewhat resilient, and is wound with a predetermined and accurately controlled tension that is insufficient to bend the wire sharply over edge portions **44** and **45**. The wire thus remains curved at those points with a radius of curvature, indicated schematically at **49** in Fig. 2, which is appreciably larger than the curvature, if any, of the edge portion of the support. The portion of each winding turn intermediate those edge portions therefore is normally convexly bowed, as shown at **46**, and is spaced from surface **42** of the winding support. The winding is preferably firmly anchored to support **10**, as by a suitable adhesive, at those portions of each turn that are in contact with the support. However, the portion **46** of each turn intermediate edge portions **44** and **45** is left entirely free and unsupported.

The wire is wound on support **10** with a pitch that is slightly greater than the diameter of the wire itself, so that adjacent turns of the winding are spaced from each other by a small but definite interval. That interval and the wire diameter are exaggerated in the drawings for clarity of illustration. The actual wire diameter for precision potentiometers in accordance with the invention is typically in the range from a fraction of a mil to several mils; and the clearance between adjacent turns is typically from about one tenth to about one half of the wire diameter, but may reach as much as three times the latter value in the case of functional windings. The described construction thus provides a resilient array of parallel wires that normally lie substantially in a common surface and that are spaced from each other and from the adjacent surface of the support. Each wire of the array is individually deflectable in a transverse plane from its normal position. The fact that each wire is typically slightly bowed outwardly from the support surface greatly enhances the resilience of the assembly.

Electrical contact with the described winding may be made by means of a conventional brush structure of any desired type that is longitudinally movable in translation with brush carrier **34**. In accordance with a further aspect of the invention, however, additional improvements in operation of the described resilient winding have been found to be obtainable with a brush assembly that comprises a plurality of independently yieldable contact fingers. The particular finger structure represented in Figs. 1 and 2 has been found to be particularly effective, and is illustrative. Four individual contact fingers **50** are illustratively shown, collectively making up the brush means **30**, but a larger or smaller number of fingers may be used. Each finger **50** typically consists of a unitary piece of wire having a substantially straight arm portion **52** at one end of which is a curved contact portion **54**. The other end of arm portion **52** is mounted on brush carrier **34** in any desired manner. That mounting may include resilient means of any desired type, which supplement the inherent resilience of the brush member itself. As illustrated, the end of the brush arm is fixedly mounted on carrier **34**, as by solder, for example. Contact portion **54** is convexly curved toward winding **20** in a longitudinal plane, forming a convexly curved contact surface **55**.

Each brush element **50** is so shaped with respect to its detailed mounting on carrier **34** that brush contact surface **55** lightly contacts the upper surface of the winding, as seen in the figures. That contact causes the engaged turns of the winding to deflect slightly downward from their normal position. Two or three adjacent winding turns are typically engaged simultaneously, and are deflected to differing degrees, depending upon the point of the curved contact surface **55** by which they are engaged. Thus, as the brush passes over any particular turn of the winding, the latter is gently and gradually depressed, and then allowed to return to its normal position, represented at **46**. A typical fully deflected position of an engaged winding turn is represented at **58** in Fig. 2. It will be noted that the wire is only slightly bowed away from its normal position, and preferably does not reach support surface **42**. That deflection is due to the cumulative action of the several brush fingers, shown illustratively as four in number. The amplitude of the deflection is not uniform along the length of the wire, but naturally tends to be greatest at the center of the unsupported portion. Hence, the level of the respective brush fingers is not strictly uniform, but conforms to the deflected form of the wire, as shown clearly in Fig. 2.

The described arrangement and action have the great advantage that, if one turn of the winding should be imperfectly aligned with its neighbors, and project upward, for example, above the general level of the array, the brush fingers do not receive any abrupt shock as they encounter that irregularity. Instead, the wire is gently deflected downwardly into alignment with its neighbors, scarcely disturbing the rectilinear brush movement. Due to the very slight mass of each wire of the winding, the energy expended in deflecting it is very small and produces correspondingly small surface stresses both in the brush and in the winding.

A further important advantage of the invention is the fact that the contact pressure between the individual fingers of the brush assembly and winding may be extremely small. As an illustrative example, the brush fingers may typically be from ⅛ inch to ⅜ inch long, and be formed of wire only about 4 mils in diameter. Such a brush finger has extremely low effective mass, and may readily be arranged to exert an extremely low contact force upon the winding. Because of the resilience and floating action of the winding array, that very light contact pressure is still sufficient to maintain reliable and effective electrical contact. When the winding is rigidly supported in the conventional manner, on the other hand, the brush elements must be more firmly pressed against the winding to maintain contact as they move over irregularities in the winding surface. That requires a heavier brush arm, increasing the effective mass of the brush and again requiring increased force to produce sufficiently high frequency response to irregularities in the winding surface. The relatively high mass and contact force of such previously available structures result in relatively rapid surface wear.

Figs. 3 and 4 illustrate somewhat schematically how the invention may be embodied in a rotary potentiometer having an annular or toroidal winding. That winding may be wound directly on a toroidal support by winding machines of known type. Alternatively, the winding support may be initially flat, somewhat simplifying the winding operation. The support and winding may then be bent into a circular curve and mounted in conventional manner. The invention may be employed in a rotary potentiometer in which the brush engages any desired surface of the winding, that surface being illustratively shown as the inner face of the winding. In the structure illustrated, the winding support **60** is generally annular, and has an inner surface **62** that is slightly concave in axial section. That concave surface is effectively bounded by the edge portions **64** and **65**, which may be quite rounded, as shown, or may, if preferred, form essentially sharp corners like the edge portions **44** and **45** of the previous embodiment. The described form of surface **62** may be produced in any convenient maner, such as by molding suitable dielectric material of known type. It will be understood that the curved support face represented at **62** may be replaced if preferred, by a channel of any desired section, which may be milled or otherwise formed in the support surface.

When a winding is applied to a support having a concave, or otherwise relieved, surface of the type illustrated,

the individual turns of the winding tend to form chords of that curve, having an intermediate portion **66** that is spaced from the concave support surface **62**. That method of construction can, of course, be employed for rectilinear as well as rotary potentiometers. In the case of a rotary potentiometer, the winding may be considered to be elongated in the circumferential direction, and that direction corresponds to the longitudinal direction of a linear potentiometer.

When an initially flat card is bent to circular form, either before or after winding, the inner surface of the card tends to become slightly convex in the axial plane. Such curvature, which is opposite to that illustrated at **62** in Figs. 3 and 4, can be accommodated by employing resistance wire of suitable stiffness, so that the natural bow of the wire exceeds the curvature of the form surface. Alternatively, such convex curvature of the form surface can readily be avoided, if desired, by suitable forming of the card on a mandrel, or by forming it initially with a concave face.

The brush formation represented in Figs. 3 and 4 is essentially similar to that of the preceding embodiment, but the individual brush fingers **68** are mounted on a rotary arm **70**, rather than on a carrier that is movable in translation. Arm **70** is typically fixedly mounted on a shaft **27**, which may be mounted and driven in conventional manner.

The action of the embodiment just described is generally similar to that of Figs. 1 and 2. Since the intermediate portions of the winding turns are, or may be, substantially straight, in contrast to the bowed form of the previous embodiment, a given brush pressure typically produces somewhat less deflection of the winding array. The floating action is still present, however. In the present embodiment a slight departure from uniform wire tension during winding tends to produce less deviation from correct alignment of the unsupported portions of the winding. It will be understood, however, that by providing relatively sharp edge portions **64** and **65** the intermediate support surface **62** may be made substantially flat, as in Figs. 1 and 2, or even slightly convex in section, so long as the convex curvature of the support surface is less than that of the individual winding turns.

The present embodiments illustrate the invention and will enable those skilled in the art to incorporate the invention effectively in a wide variety of potentiometers, utilizing known construction techniques of many different types.

I claim:

1. An electrical potentiometer, comprising the combination of an elongated support having two mutually spaced longitudinal edge portions, a resistive winding carried by the support, the individual turns of the winding engaging said edge portions of the support and being spaced from the support surface between said edge portions, adjacent turns of the winding being independently deflectable toward that surface, brush means movable longitudinally of the support and comprising a plurality of brush elements having respective contact surfaces that are spaced laterally of the winding between said edge portions, the brush elements being mounted for independent resilient movement of their contact surfaces toward the winding, engagement of the brush contact surfaces deflecting each engaged winding turn toward said support surface, and the resilient movement of the individual brush elements maintaining their respective contact during that winding deflection.

2. An electrical potentiometer, comprising the combination of an elongated support having two mutually spaced longitudinal edge portions, a resistive winding carried by the support, the individual turns of the winding engaging said edge portions of the support and being spaced from the support surface between said edge portions, adjacent turns of the winding being independently deflectable toward that surface, brush means movable longitudinally of the support and comprising a plurality of brush elements having respective contact surfaces that are spaced laterally of the winding between said edge portions, the brush elements being mounted for independent resilient movement of their contact surfaces toward the winding, brush engagement causing deflection of the winding turns by amounts that differ at the respective brush elements, the resilient movement of the individual brush elements compensating that difference in winding deflection and maintaining effective contact of each element.

References Cited in the file of this patent

UNITED STATES PATENTS

592,463	Anthony	Oct. 26, 1897
1,364,967	Victor	Jan. 11, 1921