(No Model.)

2 Sheets—Sheet 1.

W. F. & J. BARNES.

Metal Turning Lathe.

No. 232,436. Patented Sept. 21, 1880.

Fig. 3.

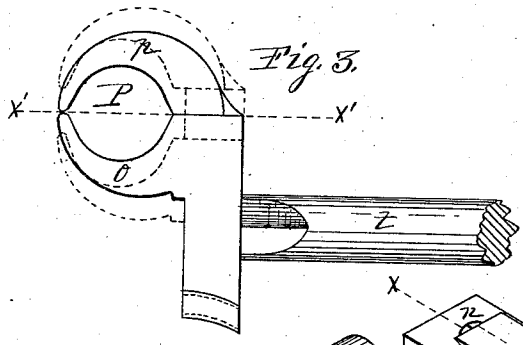

Fig. 1.

Fig. 4.

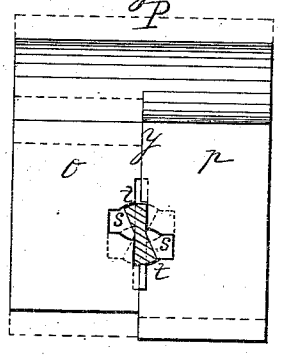

Fig. 2.

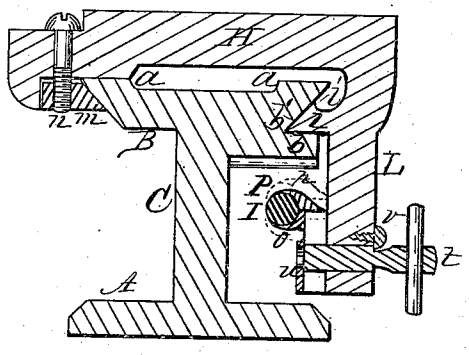

Witnesses.
M E Haight
A.D. Behel

Inventors.
William F. Barnes.
John Barnes.
Per Jacob Behel.
Atty.

N. PETERS, PHOTO-LITHOGRAPHER, WASHINGTON, D. C.

(No Model.) 2 Sheets—Sheet 2.

W. F. & J. BARNES.

Metal Turning Lathe.

No. 232,436. **Patented Sept. 21, 1880.**

Fig. 5.

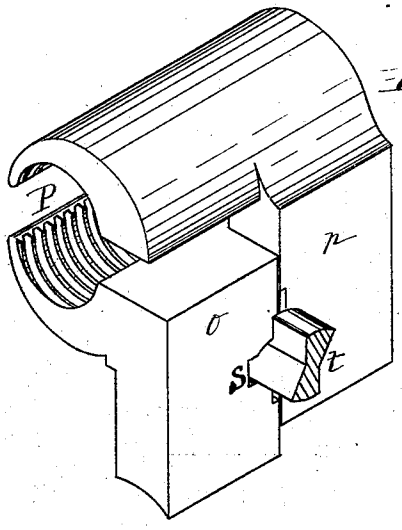

Fig. 6.

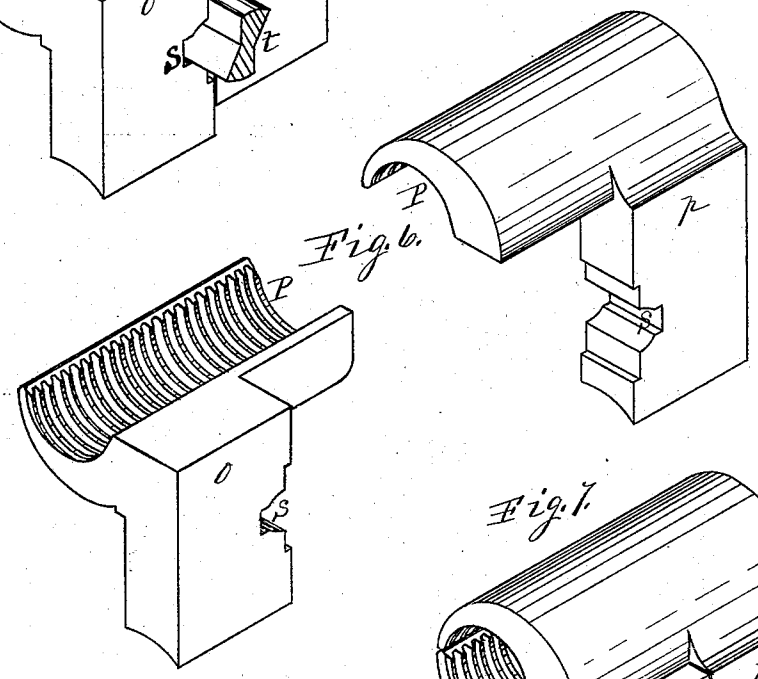

Fig. 7.

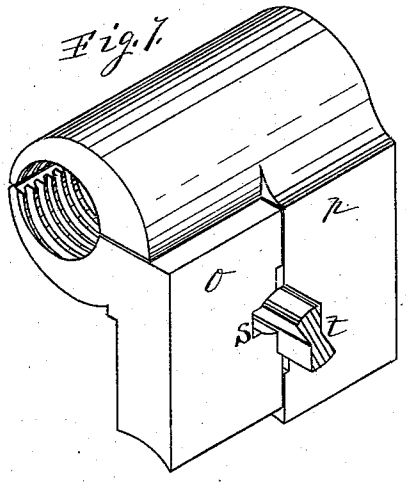

Witnesses.
W. E. Haight
A. O. Behel

Inventors.
William F. Barnes,
by John Barnes.
Per Jacob Behel
Atty.

N. PETERS, PHOTO-LITHOGRAPHER, WASHINGTON, D. C.

UNITED STATES PATENT OFFICE.

WILLIAM F. BARNES AND JOHN BARNES, OF ROCKFORD, ILLINOIS.

METAL-TURNING LATHE.

SPECIFICATION forming part of Letters Patent No. 232,436, dated September 21, 1880.

Application filed March 13, 1880. (No model.)

To all whom it may concern:

Be it known that we, WILLIAM F. BARNES and JOHN BARNES, both of the city of Rockford, county of Winnebago, and State of Illinois, have invented a new and useful Metal-Turning Lathe, of which the following is a specification.

Our invention relates to that class of lathes known as "self-acting machine or engine" lathes; and the object of our invention is to provide means for fixing the movable head-stock in position on the shears when adjusted, to provide an independent ledge on which to support the saddle of the tool-holder, and to provide a ready means for operating the screw-box of the lead-screw.

These and other improvements, all of which will be hereinafter more fully described, constitute the subject-matter of this specification.

In the accompanying drawings, Figure 1 is an isometrical representation of a lathe-bed provided with such parts of a complete lathe as are necessary to clearly represent our improvements. Fig. 2 is a transverse vertical section on dotted line *x x*. Fig. 3 is an end view of the screw-box. Fig. 4 is a vertical outside face view of the same. Fig. 5 is a view, in perspective, of the screw-box in its open position. Fig. 6 are views, in perspective, of the two parts of the screw-box; and Fig. 7 is a perspective view of the screw-box in its closed position.

The bed of our improved lathe, in this instance, is composed mainly of a plate, A, and an upper plate, B, joined by a vertical center web, C, and suitable bracket ends D, producing a bed, in cross-section, of I-form. The upper surface of this bed is recessed in such a manner that its upper ledges, at *a*, rise above the main plate and are planed with edges beveled under and fitted to receive the fast and movable head-stocks. This bed is also fitted with an additional ledge, *b*, projecting from its front side immediately under the upper ledge. The horizontal upper surface of said ledge *b* is planed, and, in connection with the under beveling surface of the front upper ledge, produces an angle-groove, *b'*, which receives an arm of a slide-rest saddle, and, in connection with the rear upper ledge, forms the shears on which the saddle-plate of the slide-rest is supported to move lengthwise. The outward-projecting edge of this lower ledge recedes from the outward-projecting edge of the ledge immediately above it, and is thereby protected from chips, filings, and dirt dropping from the lathe, and insures clean shears on which the saddle moves to prevent wearing thereof and insure accuracy in the movements of the saddle and of the work produced by the lathe. The under side of this lower ledge is fitted with gear-teeth, producing a toothed rack to engage the teeth of a pinion suitably mounted in the front vertical portion of the saddle in substantially the same manner and for the same purpose as like devices are employed in some forms of lathes now found in the trade.

The fast head-stock E in its main outline resembles like parts of lathes now found in the trade; and it consists of the ends *c* and sides *d*, formed in one piece. The end portions are provided with depending hooking-arms *e*, which are fitted to embrace the beveled edges of the shears firmly to hold the head-stock in place on the bed.

The movable head-stock F consists of a single piece, of suitable form, having its outer arms, *f*, of hooking form, fitted to embrace the outer beveled edges of the shears in the same manner as the fast head-stock. This head-stock is provided with a central vertical slot, (represented at *h*,) to render the parts elastic to permit the head to be freely moved lengthwise on the shears, and also to permit the parts to be clamped to the shears to fix the head-stock in place thereon. A suitable screw-bolt, *i*, is passed transversely through this head-block immediately above the shears, and is fitted with a thumb-nut, *k*, or other convenient form of nut, by which to readily clamp the parts of the stock to fix it in place when adjusted.

At H is represented the saddle-plate of the slide-rest, which is provided with the beveled-edged arm *l*, fitted to enter the angle *b'* formed between the upper ledge, *a*, and under ledge, *b*, and to rest on the under ledge; and its upper surface, on its inner edge, is fitted with an upward-rising portion, *l'*, to prevent chips, filings, and dirt falling on the arm *l* from entering between the arm and the surface of the angle-groove.

The over-reaching arm of the saddle-plate

rests on the ledge on the rear upper edge of the bed, and its rearward-projecting end, on its lower face, is fitted with an angle-block, *m*, to engage the under beveled face of the rear ledge, and is held in place in an adjustable manner by means of a clamping-screw, *n*, by means of which the saddle-plate may be adjusted to move snugly on the ledges.

The upper face of the saddle-plate is fitted with the beveled-edge guideway O, to receive a slide-rest.

I represents a leading-screw supported in suitable bearings under the toothed rack, which is to be connected to the moving parts of the lathe by suitable gear-wheels in the usual manner.

L represents the vertical depending front plate of the saddle-plate, which extends over the leading-screw.

At P is represented a screw-box composed of two parts, *o* and *p*, divided horizontally through the screw-threaded portion of the box on the dotted line *x'* on the plane of the lengthwise center of the leading-screw, and vertically through its depending portion on the vertical line *y*, at right angles to the axis of the screw, in such a manner that the parts will be free to move in opposite directions to open the box, as represented in the figures, to disconnect it from the leading-screw. Each of the depending portions of this box is fitted with a semi-key-hole, as represented at S, and is adapted to receive the key *t*, by means of which the box may be opened and closed to connect or disconnect it with the leading-screw to operate the saddle. When the box is closed the key will be in the position shown in Fig. 7, and when the box is open the key will be in the position shown by Fig. 5.

The box is operated by turning the key to the left hand nearly half-round to open the box, and to the right nearly half-round to close it, and when either opened or closed the parts will be locked in position by means of the engagement of the key with the curved portions of the key-hole on opposite sides of the respective parts of the screw-box. This screw-box is placed on the inside of the depending front plate of the saddle in position to engage the leading-screw, and having its depending portions placed in a suitable guide-loop, *u*, fixed in position thereto, in such a manner as to slide freely up and down therein.

t represents the key employed to operate the box, and its operating portions, in cross-section, are of hour-glass form, as represented in solid lines. (Shown in section at *t*, Fig. 4.) This key is supported in a suitable bearing in the depending front plate of the saddle in such a manner as to be freely turned in its bearings. A screw, *v*, is inserted in the plate in such a manner that its head portion shall overlap the shoulder in the neck of the key and serve to prevent its displacement.

From the foregoing it will readily be seen that with our improvements we are enabled to produce a reliable, and in many respects a superior, lathe at a much less cost than good lathes of the usual construction have heretofore been produced.

We claim as our invention—

1. The combination, with a lathe-bed provided with upper ledges, *a a*, and side ledge, *b*, having a flat upper face, and beveled portion *b'*, extending from ledge *a* to ledge *b*, said ledge *b* being formed on the outer side of the lathe-bed, of a slide-rest and saddle provided with an arm fitted to engage in the angular groove formed between the upper and lower ledges, *a b*, on the side of the lathe-bed, substantially as set forth.

2. The combination, with a lathe-bed provided with upper ledges, *a a*, and side ledge, *b*, having a flat upper face, and beveled portion *b'*, extending from ledge *a* to ledge *b*, of a slide-rest and saddle provided with an arm fitted to engage in the angular groove formed between the upper and lower ledges, *a b*, and constructed with an upwardly-extended portion, *i*, substantially as set forth.

3. The herein-described screw-box, formed of two parts, *o p*, having their vertical arms provided at their adjacent edges with like semi-key-holes S S, in combination with the key *t*, for moving the two parts of the box in opposite directions to engage or disengage the leading-screw, substantially as set forth.

WILLIAM F. BARNES.
JOHN BARNES.

Witnesses:
A. O. BEHEL,
JACOB BEHEL.