Feb. 2, 1965 P. S. MARTIN ETAL 3,168,088

THERMOSTATICALLY CONTROLLED HEATING APPARATUS

Filed Feb. 28, 1962 2 Sheets-Sheet 1

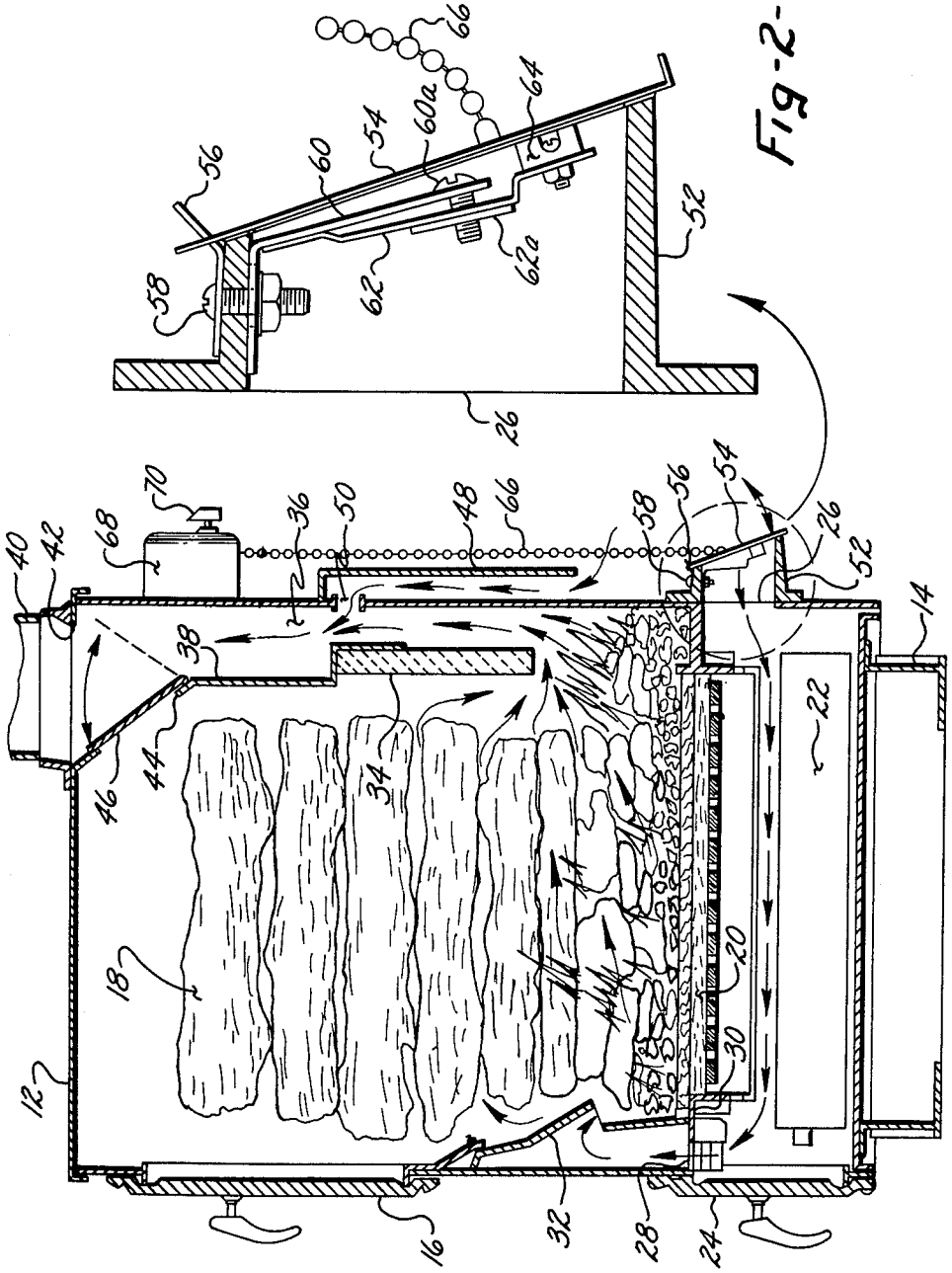

Fig-2-

Fig-1-

INVENTOR.
PERRY S. MARTIN
DONALD H. GORDON

BY
Mason Kolehmainen
Rathburn + Wyss
Atty's.

Feb. 2, 1965 P. S. MARTIN ETAL 3,168,088

THERMOSTATICALLY CONTROLLED HEATING APPARATUS

Filed Feb. 28, 1962 2 Sheets-Sheet 2

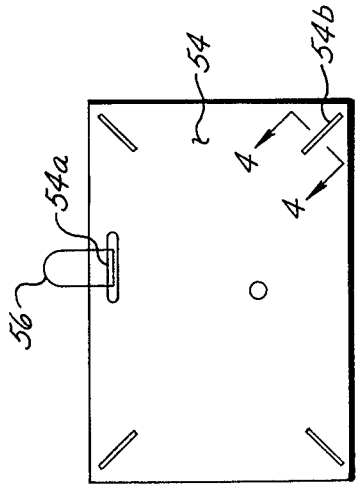

Fig-3-

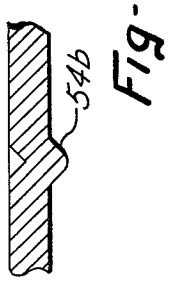

Fig-4-

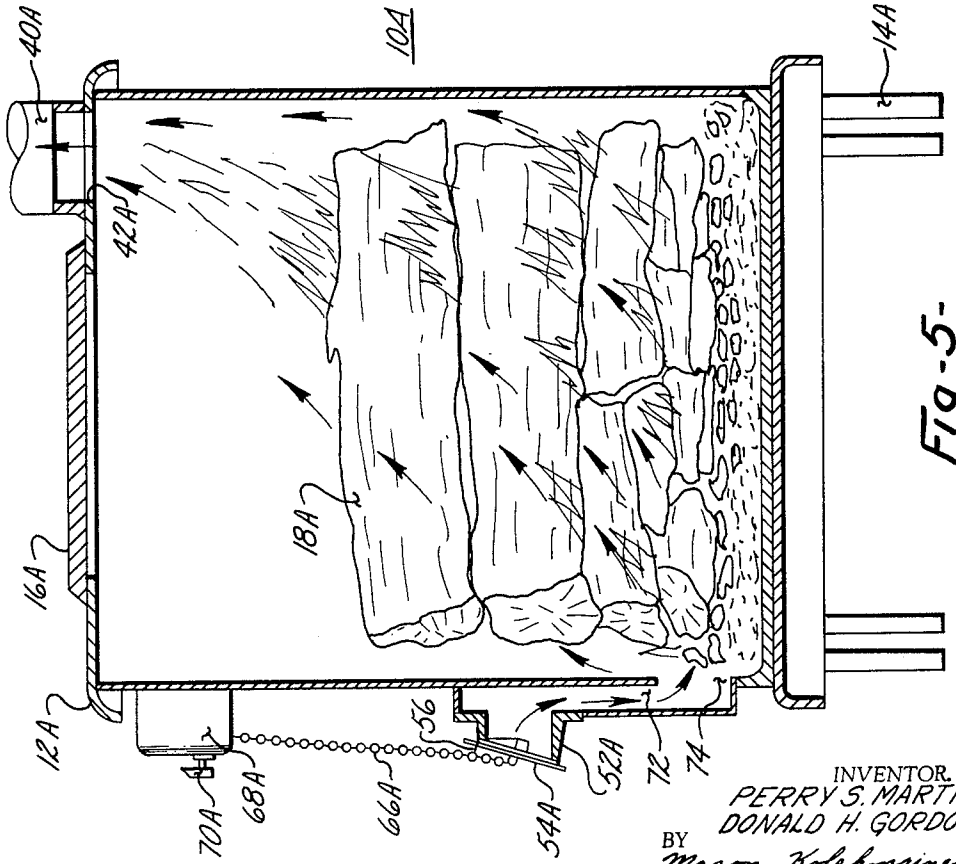

Fig-5-

INVENTOR.
PERRY S. MARTIN
DONALD H. GORDON
BY
Mason, Kolehmainen
Rathburn & Wyss
Atty's:

United States Patent Office 3,168,088 Patented Feb. 2, 1965

3,168,088

THERMOSTATICALLY CONTROLLED HEATING APPARATUS

Perry S. Martin, Harrisonburg, and Donald H. Gordon, Waynesboro, Va., assignors to Virginia Metalcrafters, Inc., Waynesboro, Va., a corporation of Virginia

Filed Feb. 28, 1962, Ser. No. 176,321
7 Claims. (Cl. 126—77)

This invention relates to a new and improved heating stove and draft control device and more particularly to a heating stove of the type adapted for combusting solid fuels such as wood, coal, coke and the like in which the amount of draft air available for combusting the fuel can be regulated to control the heat output of the stove.

Stoves of the type in which a large load of fuel such as wood, coal, coke and the like is placed in the combustion chamber to be burned over a long period of time are subject to the problem that once the load of fuel is placed in the combustion chamber, control of the burning rate is difficult. This problem is not present to any extent in stoves utilizing gaseous fuels, liquid fuels, or solid fuels where the fuel is being continuously supplied to the combustion chamber by a flow valve, feeder or stoker since the rate of burning and consequent heat output can be constantly varied by changing the flow rate of the fuel to the combustion chamber.

It has been customary to control the air flow to the combustion chamber by a damper or the like and thus control the heat output of the stoves. The dampers are usually connected to a thermostat mechanism which opens the damper when high heat output is required and then allows the damper to partially close and reduce the air flow when low heat output is required.

This type of damper action has several undesirable characteristics. When the thermostat is set low or the heat output requirements are low, the air supply to the combustion chamber is reduced resulting in the fuel in the combustion chamber being held at charring temperature with a deficiency of air for obtaining complete combustion. When a fuel such as wood is being burned this results in the tarry materials and creosote being distilled out but not burned. The tarry materials and creosote then collect on the internal surfaces of the stove and in the flue further tending to choke off the air flow through the stove.

The heavy deposits of creosote and tar also add considerable weight to the flue pipes, in some cases tending to make them fail structurally and leak, and are in general creative of dirty, sticky and messy conditions around the stove installation.

Therefore, it is an object of the present invention to provide a new and improved heating apparatus for burning large loads of fuel such as wood, coal, coke and the like which greatly reduces the amount of tar and creosote deposits within the apparatus and flue when the apparatus is being operated at relatively low heat outputs.

It is another object of the present invention to provide a new and imroved damper device for controlling the air flow to the combustion chamber of a heating apparatus of the type adapted for burning large loads of fuel such as wood, coke, coal and the like which is thermostatically controlled over a range of relatively high heat outputs and which at relatively low heat requirements provides for more complete combustion resulting in tar and creosote deposits in the apparatus and flue being materially reduced.

Another object of the present invention is to provide a new and improved heating apparatus of the type adapted for burning a single load of solid fuel such as wood, coal, coke and the like over a considerable period of time wherein the burning rate of the fuel can be controlled and yet tar and creosote in the apparatus deposited during low heat outputs are kept at a minimum with a resulting high efficiency of combustion.

The foregoing and other objects of the present invention are accomplished by providing a new and improved heating apparatus having a combustion chamber for burning a load of fuel such as wood, coke, coal and the like. Air for combustion is introduced into the combustion chamber through an air inlet opening which is controlled by a damper and the products of combustion leave the magazine through an outlet opening which is adapted for connection to an exhaust flue.

An adjustable setting thermostat is placed near the outlet opening in such a manner that the thermostatic element is responsive to the temperature of the products of combustion. Connecting means are employed between the thermostat and the damper so that when the thermostat is set at relatively high settings or a large heat output is required the damper will be in a substantially open position allowing a large air flow for combustion. Thus, when the stove is operating in the high heat ranges the damper action is proportional in that the air flow to the combustion chamber is thermostatically controlled by the damper in proportion to the heat output required.

Magnet means are adjustably positioned adjacent the damper so as to effect a magnetic pull on the damper sufficient to cause the damper to snap shut when it reaches a predetermined partially closed position. Thus, when the thermostat setting is low or only a small heat output is required, the damper will snap shut as it approaches the predetermined partially closed position, and the magnetic means will hold the damper in the closed position until the connecting means actuated by the thermostat exerts sufficient force on the damper to overcome the magnetic force on the damper. The damper is provided with a plurality of bosses extending from its inner face which abut the adjacent periphery of the inlet opening when the damper is in a closed position and prevent the damper from sealing tightly against the inlet opening. This construction allows a very small amount of air to flow into the inlet opening around the abutting periphery of the damper thus preventing the damper from sticking in the closed position because of tar or creosote deposits which might otherwise be deposited on adjacent portions of the inlet opening and damper causing sticking of the damper in the closed position. Thus when the stove is operating in the low heat ranges the damper action is no longer proportional in that it is either closed or open a significant amount.

For a better understanding of the present invention, reference may be had to the following detailed description and the accompanying drawings in which:

FIG. 1 is a sectional elevational view of a heating apparatus characterized by the features of the present invention;

FIG. 2 is an enlarged detailed sectional view of the air inlet and damper apparatus of the heater of FIG. 1;

FIG. 3 is an enlarged front elevational view of the damper of FIG. 2;

FIG. 4 is a sectional view taken along line 4—4 of FIG. 3;

FIG. 5 is a sectional elevational view of another embodiment of a heating apparatus characterized by the features of the present invention.

Referring now to the drawings, there is illustrated in FIG. 1 a heating stove 10 of the type adapted for burning large loads of solid fuels such as wood, coal, coke and the like. The stove 10 is comprised of generally rectangular body 12 which is supported from the floor by a suit-

able base **14** to prevent the floor from being overheated or burned when the stove is in operation. The rectangular body **12** serves as the magazine and primary combustion chamber of the stove for holding and burning the fuel placed therein.

A large door **16** is provided in the upper portion of the front side of the stove in order that a load of wood logs **18** or other fuel can be easily placed in the stove for burning. A grate assembly **20** is within the body **12** of the stove a distance above the bottom surface thereof in order to support the logs **18** and to allow ashes to drop into a removable ash pan **22** which is placed in the bottom of the stove. An access door **24** is provided in the lower portion of the front side of the stove in order that the ash pan **22** can be removed and emptied from time to time as ashes collect.

A primary air inlet **26** is provided in the lower portion of the back of the stove body **12** to allow primary combustion air to enter the stove at a level below the grate assembly **20**. Air entering the inlet **26** travels under the grate assembly **20** toward the front of the stove where it then moves upwardly through openings **28** provided adjacent the front of the stove in a supporting member **30** which extends around the interior periphery of the stove body **12** and supports the grate assembly **20**. The air is then directed downwardly toward the grate assembly **20** and the lower level of the logs **18** by a baffle plate **32** fastened to the inner front surface of the stove body **12**.

A combustion flue baffle **34** comprised of a refractory material is provided within the stove body **12** toward the rear thereof in order to direct the combustion products to a secondary combustion chamber **36**, formed in the rear portion of the stove body **12** by a baffle plate **38**. An exhaust flue or chimney **40** is connected to the interior of the stove body **12** through an outlet opening **42** in the top surface of the stove near the rear. The baffle plate **38** serves to define a portion of the inner wall of the combustion chamber **36** and also supports the combustion flue baffle **34**. The upper portion of the baffle plate **38** is inclined upwardly and forwardly in relation to the back wall of the stove enlarging the upper portion of the secondary combustion chamber **36** in order to accommodate the outlet opening **42** in the top surface of the stove. A direct draft opening **44** is defined in the inclined portion of the baffle plate **38** in order that the main portion of the stove body **12** can be placed in direct communication with the opening **42** in the top of the body of the stove. A damper **46** is pivotally mounted on the inclined portion of the baffle plate **38** in order to alternately open and close the opening **44** as desired.

Secondary air is supplied to the secondary combustion chamber **36** through a preheat duct **48** attached to the rear surface of the stove body **12**. The lower end of the duct **48** is open to the outside air and openings **50** defined in the rear wall of the stove body adjacent the upper end of the duct **48** are provided in order that secondary air may be introduced into the secondary combustion chamber **36**.

The primary air inlet **26** is provided with a rearwardly extending primary air inlet duct **52** which is shown in enlarged detail in FIG. 2. The duct **52** is secured to the rear wall of the stove body **12** and its outer end is terminated in a plane inclined upwardly and forwardly with respect to the rear wall of the stove. A primary air damper **54** which controls the primary air flow to the stove is pivotally attached to the upper edge of the primary air duct **52** by means of a tongue **56** which is bolted to the duct **52** and extends into a slot **54***a*, FIG. 3, defined in the damper **54**. A bolt **58** which secures the tongue **56** to the upper surface of the duct **52** also secures a rigid strap **60** which is bent downward in substantially parallel alignment with the damper **54** in the closed position as is shown in FIG. 2. Another spring strap **62** carries a magnet **64** bolted to its lower end. The strap **62** is secured at its upper end to the strap **60** by means such as spot welding and acts as a spring relative thereto tending normally to extend inwardly away from the bottom end of the strap **60**.

Adjusting means such as a bolt **60***a* is positioned at the lower end of the strap **60** and extends inwardly to threadedly engage a thickened portion **62***a* of the strap **62**. Thus, if the bolt **60***a* is tightened, the lower end of the strap **62** carrying the magnet **64** will move outwardly toward the damper **54** and conversely if the bolt **60***a* is loosened, the magnet **64** will move inwardly away from the damper **54**. By adjusting the bolt **60***a* the amount of magnetic force exerted on the damper **54** by the magnet **64** can be increased or decreased as is desired to effect the snap action of the damper between its closed position and a preselected open position.

In order to prevent the damper **54** from sticking in the closed position if tar and creosote deposits accumulate on the abutting surfaces of the damper and the end of the duct **52**, a plurality of inwardly protruding bosses **54***b* are provided on the inner surface of the damper **54**. These bosses **54***b* prevent the inner flat face of the damper **54** from tightly sealing against the abutting end surface of the duct **52** when the damper is closed and allow a small flow of air to continually flow between these abutting surfaces thus preventing tar or creosote from being deposited thereon which might cause the damper to stick while in the closed position.

As shown in FIG. 2, a flexible chain **66** is attached to the damper **54** adjacent its lower end in order that an upward pull on the chain will cause the damper to pivot counterclockwise about the tongue and slot connection and allow more inlet air to flow into the duct **52**. The upper end of the chain **66** is connected to a thermostatic unit **68** which is placed in a convenient location such as on the external wall of the secondary combustion chamber **36**. It is understood that a separate wall thermostat can also be used. The thermostatic unit **68** may be responsive to the temperature in the secondary combustion chamber **36**, or to the ambient temperature, or to both of these temperatures. The thermostat **68** is provided with a heat sensing element which expands and contracts in response to the temperature in the chamber and exerts a pull on the chain **66** inversely proportional to the temperature of the products of combustion thus controlling the inlet air flow through the duct **52** into the stove. The thermostatic unit **68** may be set by a knob **70** to maintain a level of temperature that is desired.

When the stove is operated, the thermostatic unit **68** is set by the knob **70** to the desired setting. The fuel door **16** is opened and a load of logs **18** or other similar fuel is placed in the stove and the fire is started. Since the temperature in the secondary combustion chamber **36** is low at this time, the thermostatic unit **68** exerts an upward pull on the chain **66** keeping the damper **54** open to allow a large primary air flow through the duct **52** for combustion of the fuel. The primary air travels under the grate assembly **20** and upward through the openings **28** near the front of the stove and is then directed downward by the baffle **32** against the lower portion of the fuel pile providing the necessary oxygen for combustion of the fuel.

As the temperature of the logs **18** is increased during combustion the volatile matter in them is distilled out and is directed with the air and other combustion products toward the back of the stove and upward into the secondary combustion chamber **36**. The combustion flue baffle **34** being of a refractory material becomes hot and serves as an aid to start combustion of the volatile matter which is distilled out of the logs as it moves upwardly to the secondary combustion chamber **36**. In order to achieve a more complete combustion of the volatile matter entering the secondary combustion chamber **36**, secondary combustion air enters through the lower open end of the preheat duct **48** and is preheated by contact

with the rear surface of the stove as it travels upward before it enters the secondary combustion chamber 36 through the opening 50. In this manner pre-heated secondary air is provided to support combustion of the volatile matter which is distilled out of the fuel. Complete combustion of this volatile matter in the secondary combustion chamber 36 achieves a greater efficiency from the combustion of the fuel as well as preventing unburned tars and creosote from being deposited in the stove or traveling up the flue 40 and being condensed therein causing deposits which tend to reduce the air flow through the stove.

As the temperature rises in the secondary combustion chamber 36 the thermostatic unit 68 exerts a smaller upward pull on the chain 66 allowing the damper 54 to rotate clockwise reducing the primary air flow to the stove and consequently reducing the rate of combustion in the stove. This causes the temperature in the secondary combustion chamber 36 to drop and consequently the thermostatic unit 68 responds by exerting a greater pull on the chain 66 opening the damper 54 and increasing the rate of combustion in the stove, thus controlling the heat output from the stove at the desired level as set on the thermostat 68. When it is necessary to add more fuel to the stove, the fuel door 16 is opened and more logs added. The opening of the door 16 during loading effects the draft through the stove and, in order that the secondary combustion chamber 36 does not cool down too much when this occurs and a large amount of outside air is entering the stove through the door 16, the damper 46 is provided. When the door 16 is opened, the damper 46 will swing counterclockwise about its lower hinge to the position shown in dotted lines on FIG. 1 allowing much of the outside air entering through the door 16 to pass directly up the stack 40. The secondary combustion chamber 36 therefore maintains combustion temperature better than would occur if a large flow of outside air from the door 16 passed through the chamber 36. Also the direct draft chamber 46 by opening when the door 16 is opened prevents smoke and products of combustion from going out through the door 16 into the surrounding atmosphere and causing discomfort during fuel loading operations.

When the thermostatic unit 68 is set at a low setting or the required heat output of the stove is low such as is required for heating in the late spring or early fall seasons, the damper 54 has an equilibrium position which is nearer to the closed position and thus the supply of primary air for combustion is reduced resulting in a lower heat output from the stove. In this condition of low heat output, the fuel in a stove without the features of the present invention would be held at charring temperatures which are sufficient to distill out the volatile matter in the fuel but there is not enough air available to completely burn this volatile matter resulting in the tars and creosote in the volatile matter being deposited in the stove and flue. This condition results in the need for frequently cleaning out the stove and removal and cleaning of the flue when the stove is being operated in low heat output condition.

In order to reduce these difficulties of low heat operation, the stove of the present invention is provided with the magnet 64 which causes the damper 54 to snap closed at a certain predetermined low level. When the damper 54 snaps closed the air flow through the duct 52 is cut off except for the small amount flowing into the duct around the bosses 54*b* between the abutting surfaces of the damper 54 and end of the duct 52. This small amount of air flow is sufficient to keep the fire from going out but not sufficient to raise the fuel to the temperatures where the volatile matter will be distilled out causing the disagreeable deposits of tar and creosote. Thus the stove 10 operates at low as well as high thermostat settings with great efficiency and minimum tar and creosote deposits.

When the temperatures in the secondary combustion chamber 36 reaches a low enough temperature, the pull on the chain 66 exerted by the thermostat 68 is sufficient to overcome the force of the magnet 64 on the damper 54 and it snaps open a significant distance allowing a large flow of primary air to the stove to support complete combustion of the fuel and the volatile matters distilled out of the fuel. The use of the snap action damper allows the stove to be operated at low thermostat settings without high tar and creosote deposits because the fuel is burned for a period of time with an ample amount of air, resulting in a high rate of combustion and complete combustion of volatile matter and then the air is almost completely shut off reducing the burning rate to an extent that the fuel in the stove is held at temperatures below the temperature at which great amounts of volatile matter would be distilled out. In order that the position of the damper at which the damper will snap closed can be readily adjusted in order to maintain the temperature of the logs below the temperature at which large amounts of tar and creosote will be distilled out without being burned, the adjusting bolt 60*a* is positioned in the inlet air duct 52. By tightening or loosening the bolt 60*a*, the position of the magnet 64 can be changed and consequently its magnetic force upon the damper 54 can be adjusted to effect a desired snap action closing at the proper time.

It has been found in testing the improved stove of the present invention that it can be operated at low heat settings with reductions in creosote and tar deposits in the connecting exhaust flue of as much as eighty percent (80%) by weight over the deposits of an ordinary wood burning stove operated at the same conditions. Also, tests have indicated that the new improved stove provides much higher fuel economies than ordinary stoves of the same general class operated in similar conditions.

It has been found that by incorporating the snap action damper of the present invention on an ordinary wood burning stove of the type depicted in FIG. 5 that improved fuel economy and a reduction in tar and creosote deposits can be obtained.

In FIG. 5, there is shown a heating stove 10A having a generally rectangular body 12A which serves as a fuel magazine and combustion chamber and which is supported from the floor by legs 14A. A fuel door 16A is positioned on the top surface of the body 12A of the stove in order that a load of logs 18A or other fuel may be deposited in the stove. A flue pipe 40A is connected to the interior of the stove at the rear of the top surface of the stove body 12A in order to carry out the products of combustion and flue gases.

Air for combustion enters through an air inlet duct 52A and moves downwardly in a preheat chamber 72 entering the stove through the opening 74 positioned near the bottom of the front wall of the stove body 12A. The air flow into the stove is controlled by a snap action damper 54A which is similar in construction and operation to the damper depicted in FIGS. 3 and 4. A thermostatic unit 68A is positioned near the top of the front wall of the stove body 12A and is linked to the damper 54A by the flexible chain 66A. The thermostatic unit 68A is provided with a setting knob 70A which can be adjusted to obtain the desired heat output level of the stove.

The operation of the stove 10A is very similar to the stove 10 previously described. Combustion air flows through the inlet duct 52A and is controlled by the action of the damper 54A. The air then passes downward in the preheat chamber 69 where it is preheated by contact with the front wall of the stove body 12A before entering the combustion chamber through the opening 74. The products of combustion from the stove 10A rise upwardly heating the body 12A and leaving through an opening 42A in the top which is connected to the flue 40A.

The thermostat 68A controls the snap action damper 54A in a manner similar to that previously described

thus controlling the combustion of fuel in the stove 10A in accordance with the principle previously described and thereby obtaining relatively high fuel economy and relatively low tar and creosote deposits.

While the present invention has been described and illustrated in some detail it is to be understood that changes will occur to one skilled in the art which do not depart from the true scope and spirit of the invention. Therefore, it is intended by the appended claims to cover any and all such modifications as are within the scope and spirit of the present invention.

What is claimed as new and desired to be secured by United States Letters Patent is:

1. Heating apparatus comprising a combustion chamber, inlet means in communication with said chamber for introducing air therein, a damper operatively associated with said inlet means and movable to open and close said inlet means, temperature responsive means for moving said damper in response to the temperature in said chamber, and means operatively associated with said damper for causing said damper to snap to a closed position when said damper reaches a predetermined position.

2. Heating apparatus comprising a combustion chamber, inlet means in communication with said chamber for introducing air therein, a damper operatively associated with said inlet means and movable to open and close said inlet means, temperature responsive means including an adjustable thermostatic control for moving said damper in response to the temperature in said chamber, and magnetic means operatively associated with said damper for causing said damper to snap to a closed position whenever said damper reaches a predetermined position.

3. Heating apparatus comprising a primary combustion chamber, a grate assembly in said primary chamber dividing said primary chamber into an upper and a lower portion, inlet means in communication with said lower portion for introducing air therein, damper means operatively associated with said inlet means and movable between a closed position and an open position for controlling an air flow through said inlet means, duct means communicating between said lower and upper portions for directing said air flow over said grate assembly, a secondary combustion chamber in communication with said upper portion and having a wall common therewith, temperature sensitive means for moving said damper in response to temperature, secondary inlet means in communication with said secondary chamber for preheating and introducing an air flow therein, exit means in communication with said secondary chamber, and magnetic means operatively associated with said inlet means for causing said damper means to snap to said closed position when said damper means reaches a predetermined position.

4. Heating apparatus comprising a primary combustion chamber, a grate assembly in said primary chamber dividing said primary chamber into an upper and a lower portion, inlet means in communication with said lower portion for introducing air therein, damper means operatively associated with said inlet means and movable between a closed position and an open position for controlling an air flow through said inlet means, spacing means interposed between said inlet means and said damper means for providing a small flow of air through said inlet means when said damper means is in a closed position, duct means communicating between said lower and upper portions for directing said air flow over said grate assembly, a secondary combustion chamber in communication with said upper portion and having a wall common therewith, temperature sensitive means for moving said damper in response to temperature, secondary inlet means in communication with said secondary chamber for preheating and introducing an air flow therein, exit means in communication with said secondary chamber, and magnetic means operatively associated with said inlet means for causing said damper means to snap to said closed position when said damper means reaches a predetermined position and for holding said damper means in a closed position until said temperature sensitive means causes said damper means to snap to an open position.

5. Heating apparatus comprising a combustion chamber means for receiving a relatively large charge of solid fuel, inlet means in communication with said chamber means for introducing air therein, a damper operatively associated with said inlet means and movable to open and close said inlet means, temperature responsive means including an adjustable thermostatic control for moving said damper in response to the temperature in said chamber, and snap-acting means operatively associated with said damper for snapping said damper between closed and partially open positions at low heat output requirements in response to said temperature responsive means.

6. Heating apparatus as defined in claim 5 above wherein said air inlet and said damper are positioned with surfaces which face one another in close proximity when said damper is in said closed position, and wherein spacing means are provided on one of said surfaces for poviding a small space between said surfaces when said damper is in a closed position.

7. Heating apparatus as set forth in claim 5 above wherein said snap-acting means includes magnetic means operatively associated with said damper for causing said damper to snap between said positions.

References Cited in the file of this patent

UNITED STATES PATENTS

2,454,044	Eggert	Nov. 16, 1948
2,564,713	Miles	Aug. 21, 1951
2,570,558	Johnson	Oct. 9, 1951
2,607,335	Harding	Aug. 19, 1952
2,781,039	Kaiser et al.	Feb. 12, 1957
2,836,365	Swenson et al.	May 27, 1958