J. DORO.

COMBINED DOOR CHECK AND CLOSER.

APPLICATION FILED JUNE 20, 1914.

1,134,111. Patented Apr. 6, 1915.

Fig. 1.

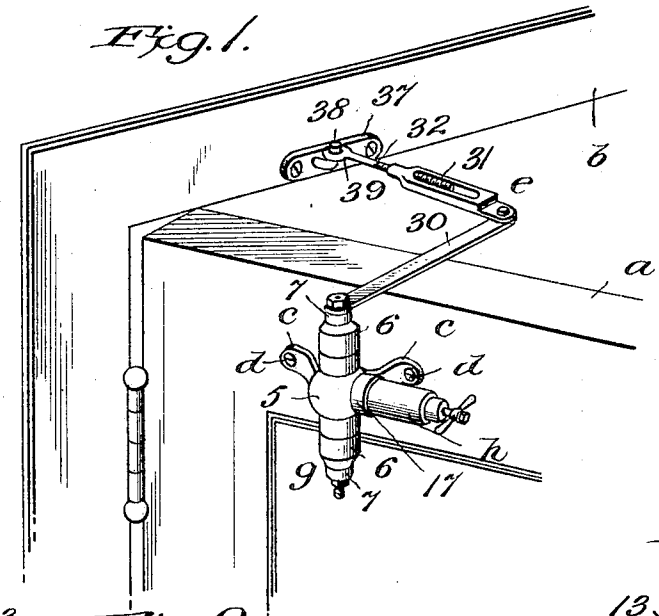

Fig. 2.

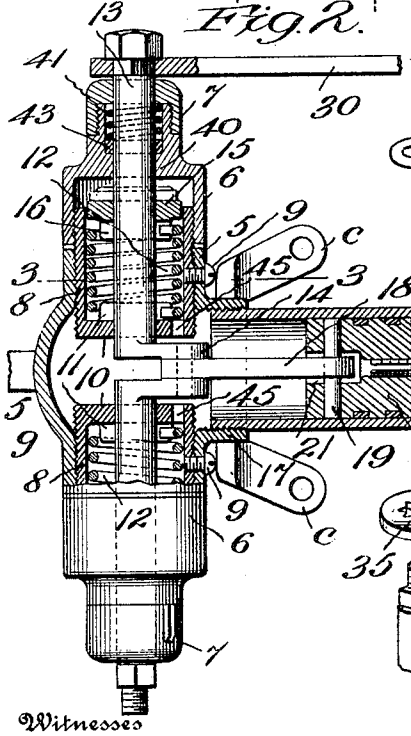

Fig. 3.

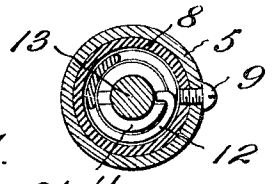

Fig. 4.

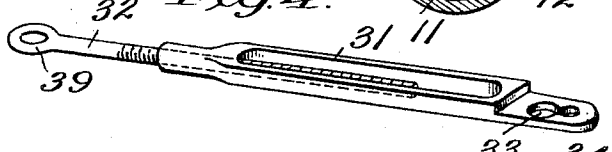

Fig. 5.

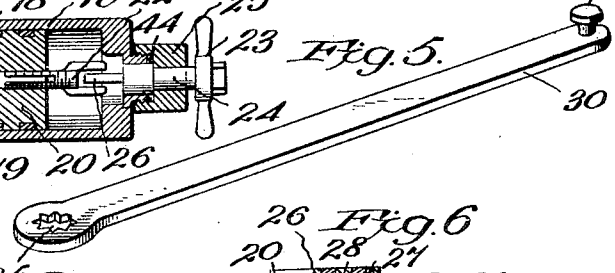

Fig. 6.

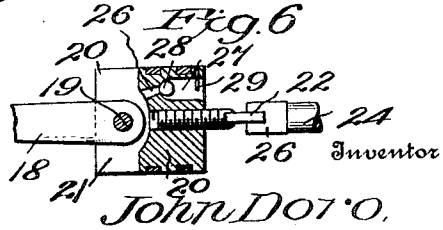

Witnesses

C. James Crowin

H. E. Laughlin

Inventor

John Doro.

By Geo. A. Byrne.

Attorney

UNITED STATES PATENT OFFICE.

JOHN DORO, OF NEW YORK, N. Y.

COMBINED DOOR CHECK AND CLOSER.

1,134,111. Specification of Letters Patent. Patented Apr. 6, 1915.

Application filed June 20, 1914. Serial No. 846,355.

To all whom it may concern:

Be it known that I, JOHN DORO, a subject of the King of Italy, residing at New York city, in the county of New York and State of New York, have invented certain new and useful Improvements in Combined Door Checks and Closers, of which the following is a specification.

The general object of the invention is to simplify the construction of combined door checks and closers, and to improve these devices in point of rendering them double ended, whereby they may be applied to either right hand or left hand doors. And to these ends the invention resides in forming a part of the casing in sections and coupling these together by bushings which function as holders for the closing springs and extending the crank shaft of the retarding or check mechanism through the opposite ends of the casing.

Other objects will appear and be better understood from that embodiment of my invention of which the following is a specification, reference being had to the accompanying drawings forming part hereof, in which:—

Figure 1 is a perspective of my invention in use. Fig. 2 is a detail of the casing showing the same partly in vertical section and in side elevation. Fig. 3 is a detail horizontal cross section of the barrel approximately on the line 3—3 of Fig. 2. Fig. 4 is a detail perspective of one section of the link connection. Fig. 5 is a view similar to Fig. 4 of another section of the link connection also showing a fragment of one end of the crank shaft. Fig. 6 is a detail partly in section and elevation of the retarding mechanism looking down and at right angles to Fig. 2.

In the drawings *a* indicates the door and *b* the door frame. The combined check and closer is arranged adjacent to the upper end of the door and near the inner side thereof and is provided with attaching feet *c* which are pierced to receive suitable fastening means, such as screws *d*, which secure the check and closer in the position shown. Connection between the said check and closer and the frame *b* is effected by means of a link connection indicated generally by *e* and which will be more particularly described later.

That part of the combined check and closer which is attached to the door *a* comprises a casing. This casing includes a barrel or reservoir portion *g* and a cylinder portion *h*. The barrel portion *g* consists of an intermediate portion 5, end portions 6—6, caps 7—7 and bushings 8—8. The parts 6—6 are disposed at the ends of the part 5 and are interiorly screw threaded, and the bushings 8 which are externally screw threaded, couple the parts 5 and 6—6 as shown. Screws or their equivalents 9—9 pass through openings in the part 5 and bushings 8—8 and operate to prevent turning movement of the bushings in the part 5. The remote ends of the bushings are opened while the opposed ends are provided with heads 10—10 and these closed ends 10 are provided with bosses 11—11 to which are attached one end of compression springs 12—12. The compression of the springs 12—12 is effected directly by a crank shaft 13 which is disposed centrally of the barrel *g* and with its ends projecting beyond the ends of the said barrel. The crank 14 of this shaft is disposed centrally thereof and is arranged between the adjacent heads 10—10 of the bushings 8—8, and it will be noted that this portion of the barrel is somewhat enlarged and spherical in contour, whereby to accommodate the crank 14 and admit of the turning thereof. Nuts or their equivalents are mounted on the crank shaft 13 and are suitably fastened thereto against turning movement independently of the crank shaft. These nuts are bossed on their inner ends, such bosses being adapted to harbor the outer terminals of the springs 12. One of such nuts is shown in Fig. 2 and indicated by 15, the boss thereof being indicated by 16.

The cylinder *h* is arranged at right angles to the barrel *g* and its open inner end portion is screwed into a collar 17 on the enlarged spherical portion of the section 5. A connecting rod 18 connects the crank 14 with a wrist pin 19 which is carried by a piston 20 arranged in the cylinder *h* and which extends transversely of a longitudinal bore 21 in the said piston. One end of the bore 20 is contracted and interiorly screw threaded to accommodate a controller herein shown in the form of a recessed screw 22 which is adjusted by a handle 23 attached to one end

of a stem 24 which is rotatably mounted in a bonnet 25 at the outer end of the cylinder *h* and which is provided at its inner end with a tongue 26 that interlocks with the bight of the screw 22.

In Fig. 6, 26 indicates a duct communicating at one end with the bore 21 and 27 indicates an enlargement of the said duct in which is arranged a ball valve 28 that operates to prevent fluid from passing in one direction through the duct and 29 indicates a keeper herein shown in the form of a pin which functions as a retainer for the ball valve 28.

The link connection *e* through which the check and closer is connected to the frame *b*, is made up of a link 30 and the link sections 31 and 32. The link 30 and the link section 31 are detachably connected together, a preferred form of detachable connection between these parts being shown in Figs. 4 and 5, where one of the parts is provided with a key-hole slot 33 which accommodates a headed stud 34 carried by the other part. With this structure the connecting and the disconnecting of the parts may be effected in a simple and expeditious manner. The outer end of the link 30 is provided with a star-shaped opening 35 of such size as will accommodate one of the non-cylindrical bosses 36 at either end of the crank shaft 13. The link section 32 is suitably adapted for connection to an attaching plate 37 on the frame *b*. A preferred construction for effecting connection between the attaching plate and the link section 32 is had by forming one of the parts with a hook 38 and the other with an eye 39 to receive the hook. With this simple structure the parts may be readily connected and disconnected whenever desired. The link section 31 is somewhat flattened and has a screw threaded bore into which is screwed the threaded portion of the link section 32.

Now by virtue of the structure of the link connection *e* it is obvious that the combined check and closer may be expeditiously rendered inoperative as such, and as is very often desired, simply by detaching the link section 32 from the attaching plate 37, and by virtue of the structure of the crank shaft 13 a simple reversal of the casing *g* from the position shown in Fig. 1, will adapt the device to operate on a door hinged so as to swing in a direction opposed to that shown in the drawings. It will be further noted that the connection between the link 30 and the crank shaft 13 is such as will admit of compensating for any loss of elasticity in the springs. In the event of observing insufficient energy in the springs to effect the closing of the door, the link 30 may be detached from the crank shaft and readjusted onto a different part of the boss 36, so as to effect the required tensioning of the springs to close the door. And finally the structure of the link sections 31 and 32 admits of varying the length of the link connection *e* so that the attaching plate may, within certain limits, be arranged at any required distance from one side of the door frame.

It will be noted that the outer parts of the sections 6—6 are contracted around the crank shaft 13 as indicated at 40 in Fig. 2. This structure provides a bearing for the crank shaft and operates to maintain the same centered. The outer ends of the sections 6—6 are chambered and the caps 7 which cover these outer portions, compress springs 41, one of which is shown in Fig. 2 and the springs hold packing 43 snugly around the crank shaft so as to prevent leakage. The bonnet 25 also tightens packing 44 around the stem 24 and prevents leakage at this point.

When the device is applied to a door the chamber portion *g* and the cylinder *h* are filled with liquid. Now it will be noted that the heads 10—10 of the bushings are pierced as indicated at 45 so as to admit of the liquid entering the bushings. Now with the screw 22 adjusted so that communication is established between the opposite ends of the cylinder through the recess in the said screw and the bore 21, it will be manifest that when the door is swung from closed to open position the turning of the crank shaft by the link connection *e* will operate to tension the springs 12—12 and to draw the piston toward the chamber *g*. Now the liquid displaced by the piston *h* will flow through the duct 26 and around the ball valve 28 into the outer end portion of the cylinder *h*. Now when the door is released and moving to closed position under the action of the springs 12—12 the resistance offered by the liquid to the outward moving of the piston, will effect the closing of the valve 28 so that the liquid in the said outer end of the cylinder may pass to the inner end thereof only through the recess in the screw and the bore 21. This will have the effect of retarding the action of the springs 12—12 and the preventing of the slamming or abrupt closing of the door and the amount of such retarding effect may be varied by the length of the recess between the inner end thereof and the adjacent end of the piston and obviously this adjustment may be effected by the turning of the stem 24.

What is claimed as new is:

1. In a combined door check and closer, the combination of a casing adapted for connection to a door and including a chamber portion, the said chamber portion being made up of an intermediate and end sections, and bushings arranged for connecting the said intermediate to the end sections and secured against turning movement in the said intermediate section, door closing

mechanism associated with the casing, and means for connecting the mechanism to the door frame.

2. In a combined door check and closer, the combination of a casing adapted for connection to a door and including a chamber portion, the said chamber portion being made up of an intermediate and end sections, and bushings arranged for connecting the said intermediate to the end sections and secured against turning movement in the said intermediate section, door closing mechanism associated with the casing and including springs connected at one end to the bushings, and means for connecting the mechanism to the door frame.

In testimony whereof I have signed my name to this specification in the presence of two subscribing witnesses this 1st day of June, 1914.

JOHN DORO.

Witnesses:
A. M. LINDENSTRUTH,
C. JAMES CRONIN.

Copies of this patent may be obtained for five cents each, by addressing the "Commissioner of Patents, Washington, D. C."