Dec. 6, 1938. J. G. BERGDOLL 2,139,297

REFRIGERATION

Filed March 6, 1937 2 Sheets-Sheet 1

Fig. 1

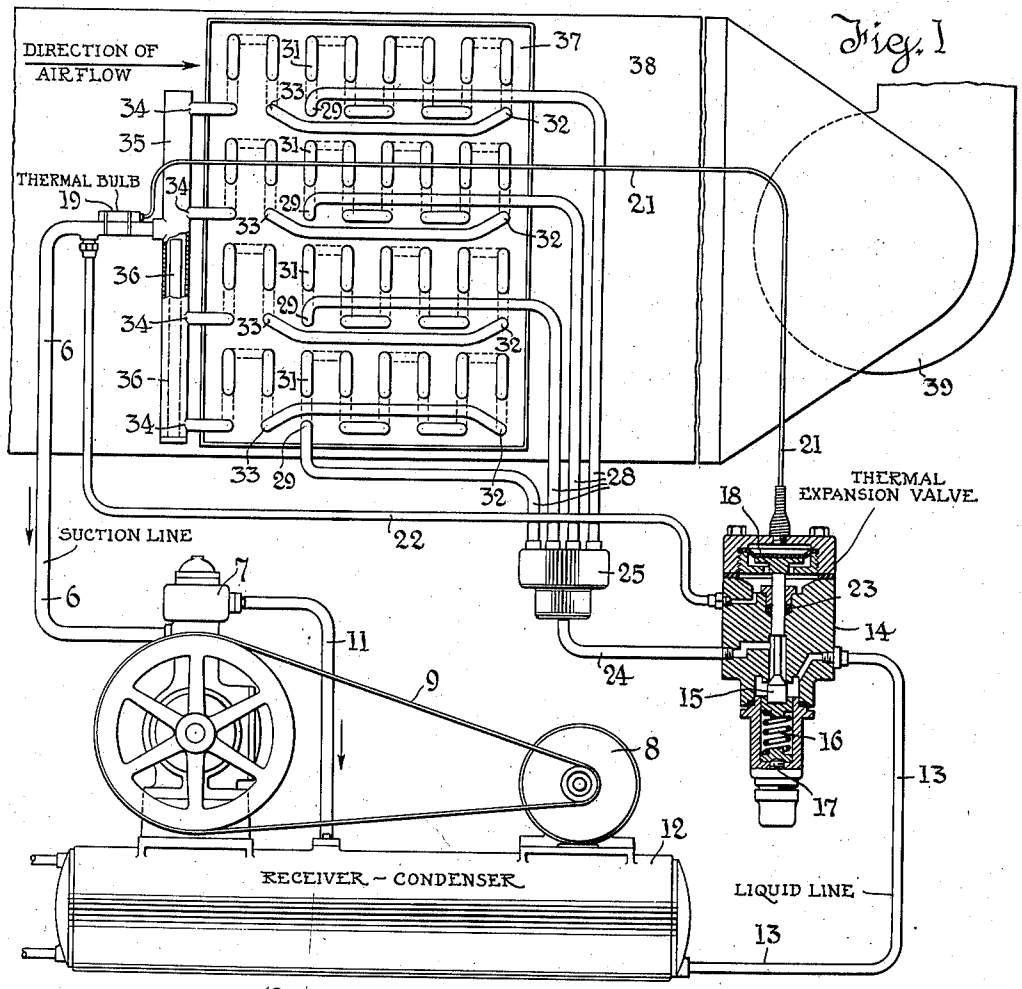

Fig. 6

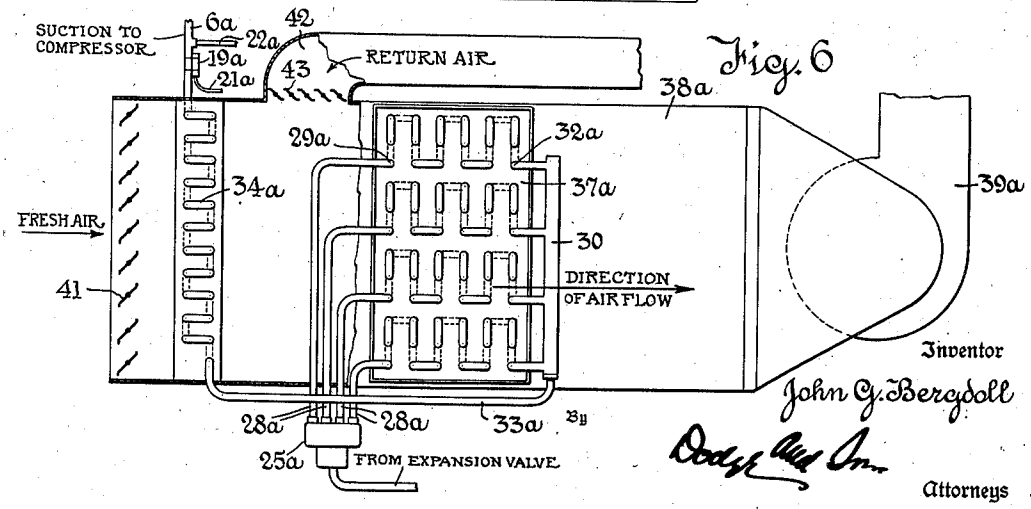

Inventor

John G. Bergdoll

By Dodge and Dodge

Attorneys

Dec. 6, 1938. J. G. BERGDOLL 2,139,297

REFRIGERATION

Filed March 6, 1937 2 Sheets-Sheet 2

Fig. 2

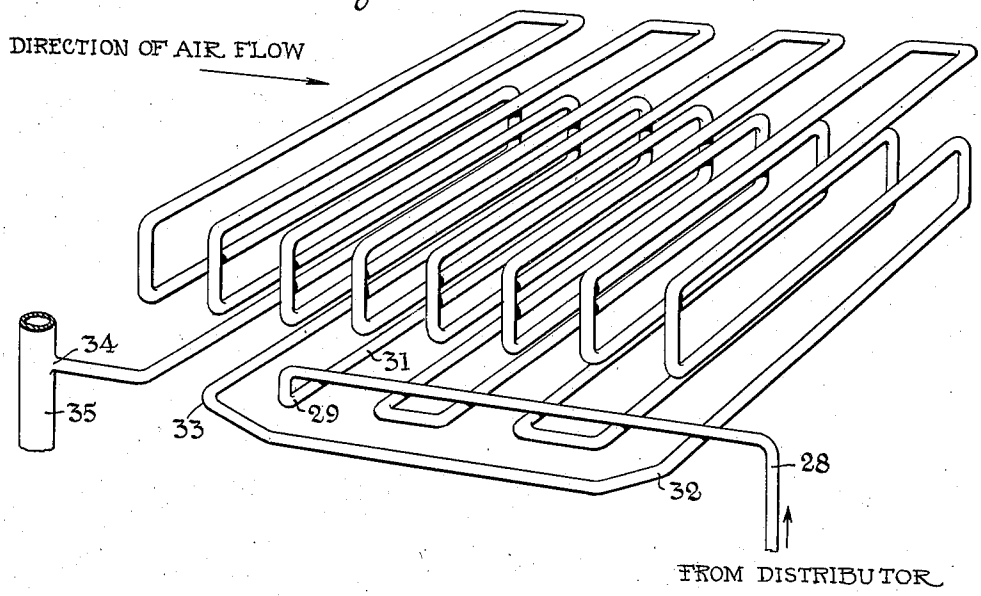

Fig. 5

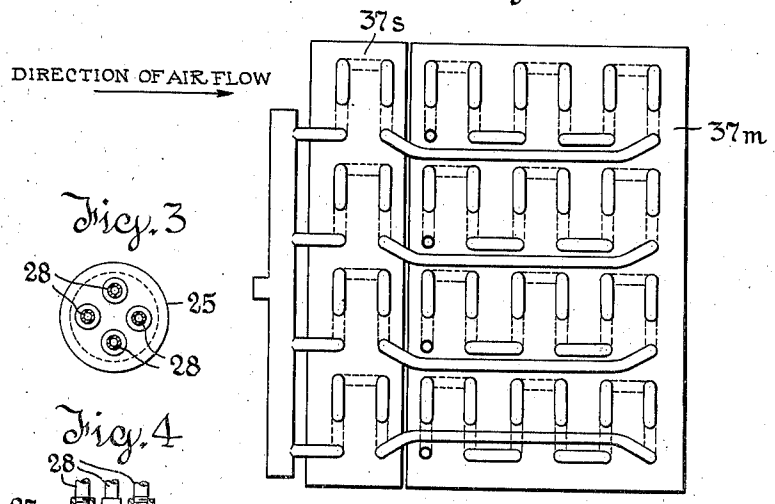

Fig. 3

Fig. 4

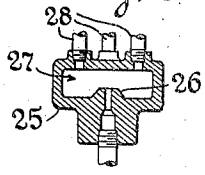

Inventor

John G. Bergdoll

By Dodge and Sons

Attorneys

Patented Dec. 6, 1938

2,139,297

UNITED STATES PATENT OFFICE

2,139,297

REFRIGERATION

John G. Bergdoll, York, Pa., assignor to York Ice Machinery Corporation, York, Pa., a corporation of Delaware

Application March 6, 1937, Serial No. 129,475

13 Claims. (Cl. 62—8)

This invention relates to refrigeration and particularly to the cooling of a flowing stream of fluid by a refrigerative evaporator fed by a thermally controlled expansion valve. The invention will be described as applied to the cooling of a stream of air, without however implying the exclusion of other gases or even liquids.

The fact that an evaporator converts the sensible heat abstracted from the air into latent heat, leads to special effects which must be appreciated if the invention is to be understood.

Consider two streams of liquid, one hot the other cold, exchanging sensible heat through a surface exchanger. As is well known, concurrent flow permits both liquids to approach a mean temperature, whereas counterflow permits each liquid to approach the entrance temperature of the other. Obviously counterflow gives a more nearly uniform temperature difference and consequently the most effective interchange where only sensible heat is exchanged.

Now consider an evaporator cooler cooling a stream of air. The temperature of the refrigerant in the evaporator is a function of the pressure. In an evaporator the pressure is never uniform, for flow resistance in even a well designed evaporator of the finned tube type causes a pressure drop varying from 2 to 6 lbs. per square inch from inlet to outlet, depending on operating conditions. The temperature of successive points in the evaporator must fall correspondingly. Accessions of heat evaporate liquid, but so long as liquid is present do not increase temperature. The pressure alone controls evaporator temperature.

Because evaporator temperature falls in the direction of refrigerant flow, concurrent flow (with respect to the air stream) gives results in an evaporator somewhat analogous to those secured by counterflow in the case of simple exchange of sensible heat. Since liquid refrigerant enters the warmer end of the evaporator, evaporation and flash generation of gas are intense. Consequently rapid flow of refrigerant through the evaporator is secured and greatly intensifies heat transfer.

The above considerations imply that an evaporator fed by a thermally controlled expansion valve and cooling a stream of air should be arranged for concurrent flow and so arranged would carry a refrigerative load near the theoretical limit of the coil. Such results have not been attained in practice and the discovery of the reason is the basis of the present invention.

With concurrent flow, refrigerant leaves the cold end of the coil at a point where the air is also cool and can supply little heat to establish the superheat demanded by the thermostatic expansion valve. Hence an abnormally large portion of the evaporator is used to supply superheat and is, in consequence, relatively ineffective to refrigerate. If a more effective superheater can be arranged the coil can be more nearly flooded and theoretical performance can be more nearly approached.

According to the invention I divide the evaporator into two sections, a small superheater section with which the air first exchanges heat and by which the air is somewhat cooled, and a larger main refrigerating section with which the air next exchanges heat and by which the major temperature reduction is effected.

Refrigerant from the expansion valve enters the main refrigerative section and flows therethrough in concurrent flow relation with the air. Refrigerant discharging from the main section is then passed through the superheater section, preferably, but not necessarily in counterflow relation to the air. Since the superheater section receives heat from the warmest (entering) air, it is highly effective and need form only a small fraction of the entire evaporator.

Such an arrangement gives more steady operation, better thermal control, and larger cooling capacity than can be had by either concurrent flow alone or counter flow alone. The main section can be operated nearly flooded, the refrigerant flow is rapid and in consequence the total evaporator surface may be made smaller in comparison with similar evaporators heretofore required for comparable loads. The economies effected in space and cost of apparatus are substantial.

In modern comfort coolers using refrigerants such as F_{12} or Freon (trade names) it has been found desirable to use a plurality of evaporator units connected in parallel and fed by a single thermal expansion valve through a turbulent mixer or distributer head which serves to deliver uniform mixtures of liquid and vapor to the various units. The invention will be described as so embodied, without implying the necessary use of multiple units.

In the drawings:

Fig. 1 is a diagram, partly in elevation and partly in section showing a typical refrigerating circuit. The direction of air flow is indicated by an arrow and related legend. The duct is broken away to show the evaporator structure.

Fig. 2 is a perspective view of the tube forming

the two sections of one unit of the evaporator in Fig. 1. The fins are omitted so that the path of refrigerant can be traced.

Fig. 3 is a plan view of the distributer head.

Fig. 4 is an axial section therethrough.

Fig. 5 illustrates a modification in which the fins on the main and superheater sections are distinct to minimize heat transfer between the two sections.

Fig. 6 illustrates a further modification.

Referring to Fig. 1, the suction line is indicated at **6** and leads to the compressor **7**. The compressor is driven by motor **8** through a belt **9** and discharges through high pressure line **11** into a combined condenser and receiver **12**. The condenser chosen for illustration is water cooled but this is immaterial. From receiver **12** liquid line **13** leads to the expansion valve, whose body appears at **14**.

The valve proper **15** is loaded in a closing direction by spring **16** whose stress is adjustable by turning screw **17**. The valve is shifted to regulate superheat in the suction line by diaphragm **18** subject to the opposing effects of suction temperature and suction pressure. The motor diaphragm **18** is urged in a valve opening direction by vapor pressure developed in thermostatic bulb **19** by rising temperature and communicated to the space above the diaphragm by pipe **21**. The lower face of the diaphragm is subject to suction pressure communicated by pipe **22**. Bulb **19** is on the suction line and pipe **22** is connected adjacent the bulb, so that diaphragm **18** responds to the pressure-temperature relation at substantially a single point. A packing gland **23** protects the lower face of the diaphragm from the pressure on the discharge side of valve **15**. Adjustment of spring **16** determines the degree of superheat maintained, conveniently **10°** F. Other conventional expansion valves with superheat control or giving approximate superheat control may be substituted.

For example, where a constant speed compressor is used, so that the pressure drop from the expansion valve to the suction line is constant, connection **22** and packing **23** can be omitted. The expansion valve then responds to outlet pressure corrected for a constant drop through the evaporator by appropriate adjustment of spring **16**.

From body **14** expansion line **24** leads to the distributer head whose body is indicated at **25**. Pipe **24** leads to nozzle **26** (see Figs. 3 and 4) which discharges in the center of toric turbulence chamber **27**, producing therein violent rotary turbulence. Four symmetrically arranged tubular branches **28** lead uniform mixtures of liquid and vapor from chamber **27** to four evaporator units.

The major pressure reduction occurs at valve **15** but the tubes **28** or their entrance orifices or both may be arranged to provide such throttling as may be advisable to balance the delivery to the four evaporator units. There is also some pressure drop through the evaporator.

While I show four units any suitable number may be used. The circuit so far described is largely conventional and no novelty is here claimed for it. Equivalents may be substituted.

The invention here claimed resides in the evaporator, particularly the connections of and flow path through each unit with reference to the path of air in contact with the unit. The units are essentially identical and a description of one will suffice.

The units extend horizontally one above the other. Each tube **28** connects at **29** with the evaporator tube **31**. This zig-zags upward in a vertical plane for three passes, offsets to the right, then zig-zags downward for three passes, again offsets to the right and so on through six tiers of passes to **32**. Stated directions refer to Figs. 1 and 2 and the number of passes is subject to variation. The tube **31** from **29** to **32** forms the main evaporator. From **32** the refrigerant is led back to **33** which is the entrance to the superheating unit. This is formed as a continuation of tube **31**, and zig-zags upward three passes, offsets to the left, zig-zags downward three passes and enters suction manifold **35** at **34**. Suction line **6** leads from manifold **35** at about mid-height and the filler piece **36** is placed in the lower half of the manifold to accelerate flow there and inhibit the accumulation of liquid. Such accumulation, if permitted to occur would retard flow through the lower units, and would produce a false temperature condition at the thermal bulb as compared with the actual gas temperature leaving the coil circuits

In Fig. 1 all four units including both sections of each unit are provided with a series of parallel plate fins, the first one of which appears at **37**. These may be of any known type and either flat or corrugated. The entering air may be fresh air, recirculated air or a mixture of the two. The air flow is directed in contact with the evaporator by a duct **38** and is induced by a fan **39** or other suitable means.

In Fig. 5, which shows a modification, two distinct sets of fins are used **37***s* on the superheater section and **37***m* on the main evaporator section. This thermal segregation of the sections somewhat improves performance, but the improvement is not great enough to justify the extra cost in all cases.

In Fig. 5, as in Fig. 1, there is a distinct superheater section for each main section, but this need not be so, for all the main sections may deliver to a single superheater. Fig. 6 shows this arrangement as well as other optional features.

In Fig. 6 distributer head **25***a* is fed by an expansion valve (not shown) identical with the expansion valve **14** of Fig. 1. Thermal bulb **19***a* and pressure connection **22***a* control this valve exactly as the similarly numbered parts in Fig. 1 control expansion valve **14**. Branches **28***a* lead from head **25***a* to four main units the entrance connection being at **29***a* and the exit connection at **32***a* which leads to manifold **30**. Manifold **30** is connected by pipe **33***a* to a single finned superheater coil **34***a* from which the suction line **6***a* leads. Fins **37***a*, duct **38***a* and fan **39***a* correspond to parts **37**, **38** and **39** of Fig. 1.

In Fig. 6 fresh air entering through adjustable louvers **41** alone contacts superheater coil **34***a*. This is the warmest air available. After warming coil **34***a*, this air and recirculated air fed back from the conditioned space through return air duct **42** and adjustable louvers **43**, flow together over the main coils in concurrent flow relation with the refrigerant.

In any case illustrated the air flow is such that the air first passes in heat exchanging relation with the superheater section (or sections) and then in heat exchanging relation with the main evaporator section (or sections) this last in concurrent flow relation with the refrigerant. Such direction as to Figs. 1, 5 and 6 is from left to right as indicated by the arrows and legends on these figures.

Some idea of the advantage of the described arrangement can be had by considering a typical case. Entering air at 80° F. cooled to 60° F. at discharge with a suction pressure of 36 lbs. corresponding to 40° F., can be assumed as typical. With simple concurrent flow, there would be a temperature difference of only 20° to impart a 10° superheat. By the present arrangement there is a 40° temperature difference to impart the superheat, yet substantially the entire advantage of concurrent flow is retained. As a consequence the evaporator may be more heavily loaded and operates more steadily and efficiently.

What is claimed is,—

1. The method of cooling a stream of fluid by flow in heat exchanging relation with an evaporator which comprises passing the fluid in heat exchanging relation with a refrigerant superheating section and then in heat exchanging relation with a main refrigerant evaporating section of an evaporator while supplying volatile liquid refrigerant under pressure to the said main section, directing the refrigerant therethrough in concurrent flow relation relatively to the fluid stream and thence directing it through said superheating section; withdrawing superheated refrigerant vapor from said superheating section at a pressure lower than the pressure at which said liquid refrigerant is supplied; and varying the rate of such supply of liquid refrigerant in relation to the differential between a force proportional to evaporator pressure and a force proportional to the temperature of said withdrawn refrigerant.

2. The method of cooling a stream of fluid by flow in heat exchanging relation with an evaporator which comprises passing the fluid in heat exchanging relation with a refrigerant superheating section and then in heat exchanging relation with a main refrigerant evaporating section of an evaporator while supplying volatile liquid refrigerant under pressure to the said main section, directing the refrigerant therethrough in concurrent flow relation relatively to the fluid stream and thence directing it through said superheating section in counterflow relation relatively to said fluid stream; withdrawing superheated refrigerant vapor from said superheating section at a pressure lower than the pressure at which said liquid refrigerant is supplied; and varying the rate of such supply of liquid refrigerant in relation to the differential between a force proportional to evaporator pressure and a force proportional to the temperature of said withdrawn refrigerant.

3. The method of cooling a stream of fluid by flow in heat exchanging relation with an evaporator which comprises passing the fluid in heat exchanging relation with a refrigerant superheating section and then in heat exchanging relation with a main refrigerant evaporating section of an evaporator while supplying volatile liquid refrigerant under pressure to the said main section, directing the refrigerant therethrough in concurrent flow relation relatively to the fluid steam and thence directing it through said superheating section; withdrawing superheated refrigerant vapor from said superheating section at a pressure lower than the pressure at which said liquid refrigerant is supplied; and varying the rate of supply of liquid refrigerant in relation to the degree of superheat of the withdrawn refrigerant, to maintain said superheat substantially constant.

4. The method of cooling a stream of fluid by flow in heat exchanging relation with an evaporator which comprises passing the fluid in heat exchanging relation with a refrigerant superheating section and then in heat exchanging relation with a main refrigerant evaporating section of an evaporator while supplying volatile liquid refrigerant under pressure to the said main section, directing the refrigerant therethrough in concurrent flow relation relatively to the fluid stream and thence directing it through said superheating section in counterflow relation relatively to said fluid stream; withdrawing superheated refrigerant vapor from said superheating section at a pressure lower than the pressure at which said liquid refrigerant is supplied; and varying the rate of supply of liquid refrigerant in relation to the degree of superheat of the withdrawn refrigerant, to maintain said superheat substantially constant.

5. The method of cooling a fluid by evaporation of a volatile refrigerant in an evaporative surface cooler, which comprises circulating the fluid in heat exchanging contact with such cooler, performing the major portion of the cooling of the fluid by evaporation of liquid refrigerant to a substantially saturated vapor condition in a major portion of said cooler with respect to which portion the flow of fluid and refrigerant are concurrent, imparting superheat to the saturated vapor so produced in a minor portion of said cooler with which fluid substantially unaffected by exchange of heat with said major portion exchanges heat, and varying the rate of supply of liquid refrigerant to said evaporator surface cooler in relation to the differential between a force proportional to evaporator pressure and a force proportional to the temperature of said withdrawn refrigerant.

6. The method of cooling a fluid by evaporation of a volatile refrigerant in an evaporative surface cooler, which comprises circulating the fluid in heat exchanging contact with such cooler, performing the major portion of the cooling of the fluid by evaporation of liquid refrigerant to a substantially saturated vapor condition in a major portion of said cooler with respect to which portion the flow of fluid and refrigerant are concurrent, imparting superheat to the saturated vapor so produced in a minor portion of said cooler with which fluid substantially unaffected by exchange of heat with said major portion exchanges heat, and varying the supply of volatile refrigerant to said surface cooler in relation to the degree of superheat of refrigerant leaving said minor portion to maintain said superheat substantially constant.

7. The method of cooling a fluid by evaporation of a volatile refrigerant in an evaporative surface cooler, which comprises circulating the fluid in heat exchanging contact with such cooler, performing the major portion of the cooling of the fluid by evaporation of volatile refrigerant to a substantially saturated vapor condition, in a plurality of parallel-flow streams in a major portion of said cooler with respect to which portion the flow of fluid and of the parallel-flow refrigerant streams are concurrent, imparting superheat to the saturated vapor so produced in a minor portion of said cooler with which fluid substantially unaffected by the major portion of said cooler exchanges heat, and varying the supply of volatile refrigerant to said surface cooler in relation to the degree of superheat of refrigerant leaving said minor portion.

8. The method of cooling a fluid by evapora-

tion of a volatile refrigerant in an evaporative surface cooler, which comprises circulating the fluid in heat exchanging contact with such cooler, performing the major portion of the cooling of the fluid by evaporation of volatile refrigerant to a substantially saturated vapor condition in a plurality of parallel-flow streams in a major portion of said cooler with respect to which portion the flow of fluid and of the parallel-flow refrigerant streams are concurrent, imparting superheat to the saturated vapor so produced by heat exchange with the warmest available fluid approaching said surface cooler, and varying the supply of volatile refrigerant to said surface cooler in relation to the degree of superheat of refrigerant leaving said minor portion.

9. The combination of an evaporator comprising a minor superheating portion and a major cooling portion; means for circulating a fluid first over said superheating portion and then over said main cooling portion; means for supplying volatile refrigerant to said main cooling portion and causing it to flow therethrough in concurrent flow relation with said fluid, then to flow through said superheating portion; and a thermostatic expansion valve controlling said supply of refrigerant, said thermostatic valve being arranged to be controlled at least in part by the temperature of refrigerant leaving said superheating portion.

10. The combination of an evaporator comprising a minor superheating portion and a major cooling portion; means for circulating a fluid first over said superheating portion and then over said main cooling portion; means for supplying volatile refrigerant to said main cooling portion and causing it to flow therethrough in concurrent flow relation with said fluid, then to flow through said superheating portion in counterflow relation with said fluid; and a thermostatic expansion valve controlling said supply of refrigerant, said thermostatic valve being arranged to be controlled at least in part by the temperature of refrigerant leaving said superheating portion.

11. The combination defined in claim 9, in which the main section comprises a plurality of units through which the refrigerant flows in parallel and the superheater section comprises a corresponding plurality of units through which refrigerant evaporated in the main unit flows in parallel.

12. The combination defined in claim 9, in which the main evaporator comprises a plurality of units through which the refrigerant flows in parallel and the superheater is a single unit to which all the units of the main section deliver refrigerant.

13. The combination of an evaporator comprising a minor superheating portion and a major cooling portion; means for circulating a fluid to be cooled in heat exchanging relation with said evaporator; means for supplying volatile refrigerant to said main cooling portion and causing it to flow therethrough and then through said superheating portion; means controlling the supply of refrigerant to said evaporator; means responsive to the condition of refrigerant leaving said superheating portion and serving to control said supply controlling means; and means controlling the flow of fluid to be cooled and serving to direct the warmest available fluid into heat exchanging relation with said superheating portion and to cause the fluid to flow in concurrent flow relation with the volatile refrigerant in said main cooling portion.

JOHN G. BERGDOLL.