(12) UK Patent Application (19) GB (11) 2 118 751 A

(21) Application No **8310728**
(22) Date of filing **20 Apr 1983**
(30) Priority data
(31) **3214362**
(32) **20 Apr 1982**
(33) **Fed. Rep. of Germany (DE)**
(43) Application published
2 Nov 1983
(51) **INT CL³**
B41J 5/08
(52) Domestic classification
G4H 13D 14A 14B 14D KU
U1S 2202 2247 G4H
(56) Documents cited
GB A 2076572
GB A 2066990
GB A 2066534
GB A 2062916
GB A 2033633
GB 1597874
GB 1561654
GB 1451817
GB 1385416
(58) Field of search
G4H
(71) Applicant
Olympia Werke AG,
(FR—Germany),
2940 Wilhelmshaven,
Postfach 960,
Federal Republic of Germany
(72) Inventors
Horst Brendes,
Rudolf Strecker
(74) Agent and/or address for service
J. F. Williams & Co.,
34 Tavistock Street,
London,
WC2E 7PB

(54) **Circuit arrangement in typewriters or similar machines with a large stock of characters**

(57) In a typewriter or like machine with a large stock of characters, the typewriter or like machine having an input keyboard (1), an input register (2) providing an output of code words representing characters from the character stock and an indicating device (8) for representing at least one character, a circuit arrangement is provided in which some of the code words are ambiguous and represent more than one character, means are provided for representing the associated characters on the indicating device (8) and selection means (17, 18) are provided enabling selection from the associated characters for further processing.

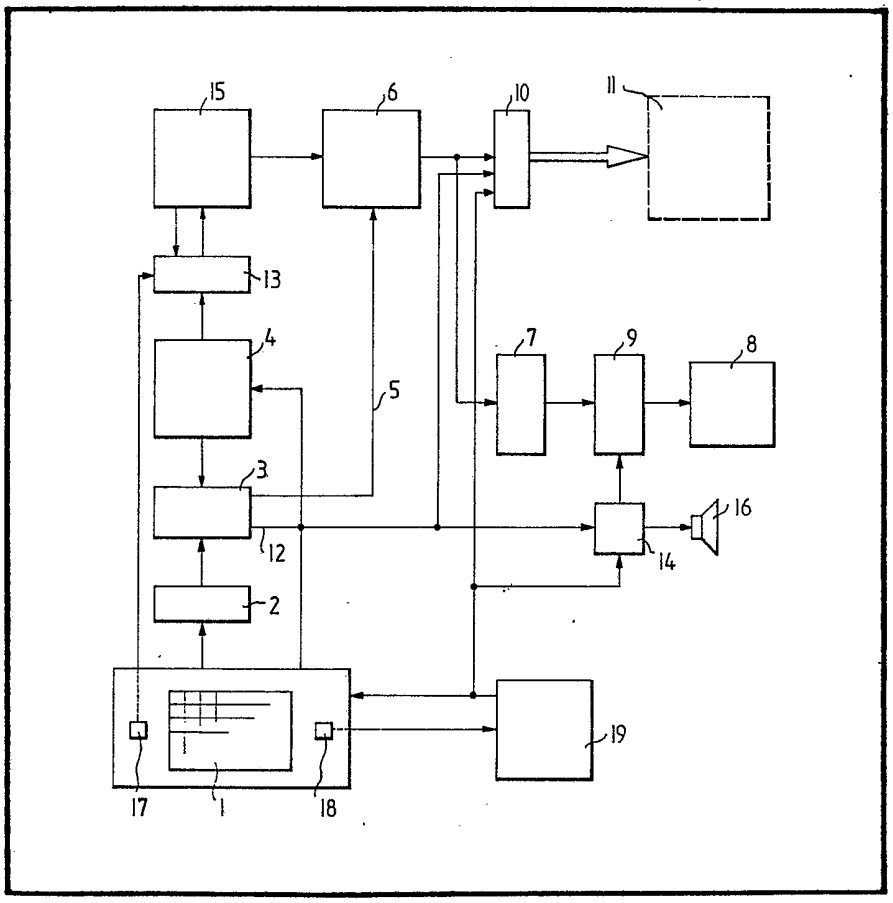

GB 2 118 751 A

2113751

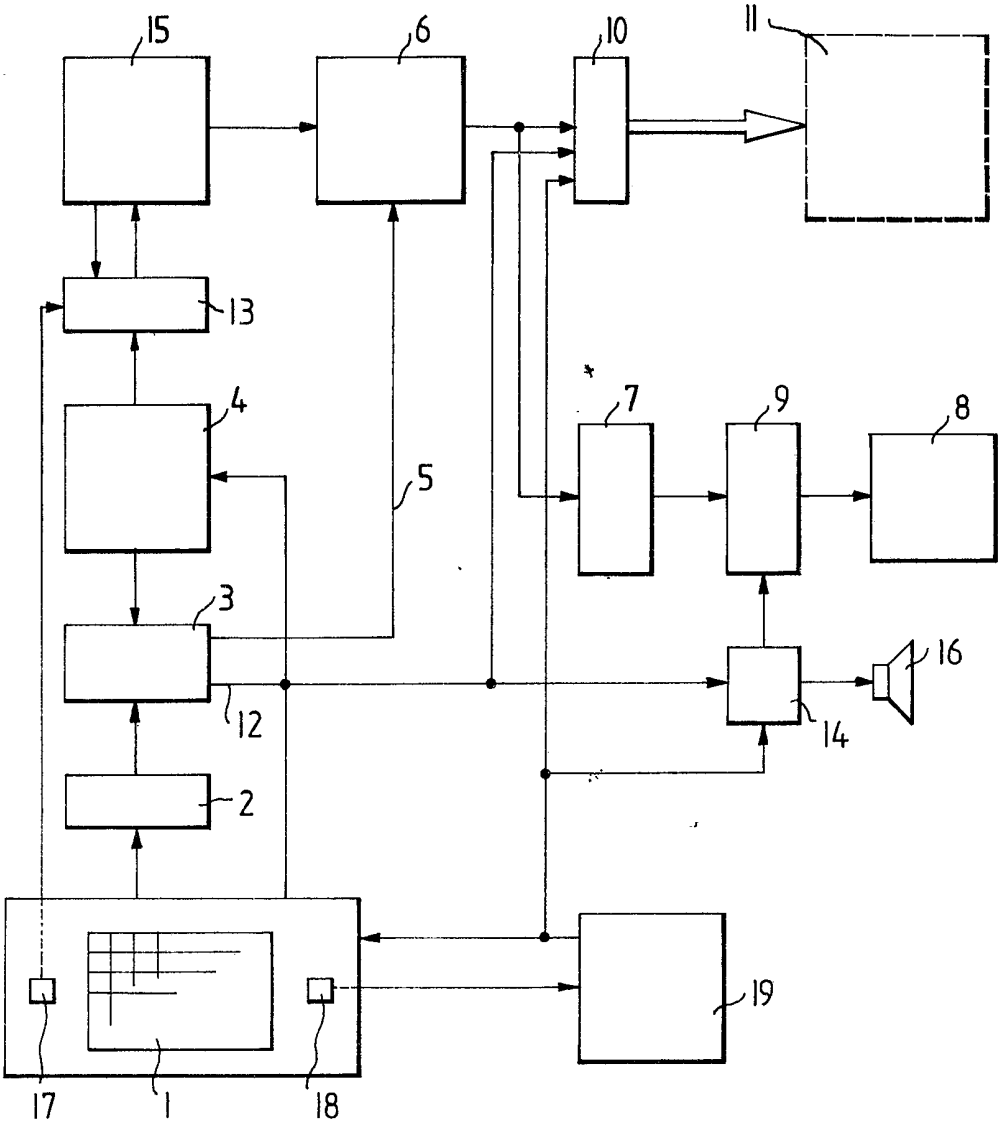

SPECIFICATION

Circuit arrangement in typewriters or machines with a large stock of characters

The invention relates to a circuit arrangement for a typewriter or like machines with a large stock of characters, the typewriter or like machine having an input keyboard, an input register providing an output of code words representing characters from the character stock and an indicating device for representing at least one character.

Ideographic typewriters are known with which, by actuation of a plurality of keys at a time of their keyboard in accordance with a coding system, individual characters can be selected from a large stock of characters in a character store and supplied to a printing mechanism or a projection screen for output. As a result of the principle of the input with a plurality of keys at a time, it is possible to feed in characters, the number of which is far above the number of keys in the keyboard. Nevertheless, such an input code very soon becomes complex and difficult to learn, if too great a number of characters have to be included in it or the allocation to the individual characters is to remain easily understandable.

The invention seeks to provide a machine of the kind referred to at the beginning so that a large stock of characters can be processed despite the use of a small keyboard and of an input code which is easily understood and learnt.

According to the invention, there is provided a circuit arrangement for a typewriter or like machines with a large stock of characters, the typewriter or like machine having an input keyboard, an input register providing an output of code words representing characters from the character stock and an indicating device for representing at least one character wherein some of the code words are ambiguous and represent more than one character in the character stock, means are provided for representing the associated characters on the indicating device and selection means are provided enabling selection from the associated characters for further processing.

Preferably the selection means comprises a selection input means and/or a confirmation input means for control of the feeding of selected characters to a further processing unit.

The invention enables an input code which can easily be learnt with logical correlation of the input to the characters can be used without ambiguities in the input resulting therefrom. This means that a restriction in the stock of characters necessary or the provision of a complicated keyboard, which is difficult to operate, are not required.

But even in machines where the input is effected by actuation of only one key at a time, it may be advisable to allocate at least some of the keys to a plurality of characters and to render a simple operation possible by use of a construction according to the invention.

The invention will now be described in greater detail, by way of example, with reference to the drawing, the single figure of which is a very simplified block diagram of an ideographic typewriter in accordance with the invention.

The block diagram shows an ideographic typewriter for Chinese script for example, the individual characters (ideograms) of which can be given out by actuating a plurality of keys at a time of a keyboard 1. This input coding may be based on the pronunciation of the ideograms, the particular keys to be actuated resulting from pronunciation criteria, such as the second reproduction of the beginning of the character by up to four Latin and restriction of the key input to only a few key actuations, for example a maximum of four, per character, ambiguities result, so that some of the stock of characters of the machine is associated with unambiguous input information, but others are associated with ambiguous input information. If ideographic characters are fed in with the keyboard 1, then the input information resulting from the key actuation can be unambiguous—namely when only a single character is allocated to the input information—or ambiguous if a plurality of characters are allocated to the input information.

The input information orginating from the key actuation enters an input register 2 in which the information is assembled from the individual actuations of the keys and temporarily stored. It can be supplied to a comparator 3 to check whether it is a question of an unambiguous or ambiguous item of input information. All the ambiguous items of input information which occur are contained in a store 4, for which a region of a larger store may also be used, and can likewise be supplied to the comparator 3, in which case a comparison with the input information coming from the input register 2 produces a positive result of the comparison in the case of ambiguous information and a negative result of the comparison in the case of unambiguous information.

In the event of a negative result of the comparison, the input information is given out, via a data path 5, as an unambiguous code word, to a character generator 6 which undertakes, in a manner known per se, a conversion into control signals for the control of a dot-matrix representation device, for example a needle printer, an ink-vapour raster recording mechanism, a raster screen etc. The control signals are stored in an image repeat store 7 of a one-place raster indicating device 8 through a control circuit 9 and the character is represented so as to be visible to the operator of the machine. The image repeat store 7 ensures a constant repetition of the control signals so that a lasting image appears on the indicating device 8. The control signals delivered by the character generator 6 are also prepared, through an opened release circuit 10, for output to a further processing device 11, for example a recording

mechanism, an image screen, or a long-range transmission device.

If the comparison of the input information from the input register 2 with the information contained in the store 4 leads to a positive result, however, that is to say if it is a question of ambiguous information, then a signal is given out at the corresponding output 12 of the comparator 3, which signal causes a locking of the release circuit 10, the control of an input locking control in the keyboard 1, storage of the compared information in an intermediate register 13 and the activation of a signal control device 14. As a consequence of this, the input of further characters through the keyboard 1 is first prevented. The information stored in the intermediate register 13 reaches a store 15 in which the code words representing the characters associated with ambiguous input information are stored. For each ambiguous item of input information, the associated code words are deposited in a table and can be read out in succession for example by counting on an initial address. The initial address is formed from the information contained in the intermediate register 13. The store 15 can also be a region of a larger store.

Thus addressing of the corresponding tables in the store 15 by the information present in the intermediate register 13 leads to the fact that the first code word in the table is given out to the character generator 6 and there converted into raster control signals which arrive for representation on the raster indicating device 8 via the image repeat store 7 and the control circuit 9. Since the release circuit 10 is locked, the data are not available for output to further processing devices 11. The activated signal control device 14 has, in the meanwhile, excited an acoustic signal transmitter 16 to give out a warning tone to draw the attention of the operator to the ambiguity of his input, and the control circuit 9 of the indicating device 8 has been set by the signal control device 14 in an operation mode which causes a blinking representation of the character.

If the operator finds that the character represented—blinking—is not the one required, he actuates a selection key 17 the output signal of which causes a counting on of the invention contained in the intermediate register 13. The next following code word is now read out of the table in the store 15 and indicated, the locking and the "blinking" mode of operation being retained. In this manner, the operator can call up all the code words of the table by actuating the selection key 17 and observe the corresponding characters on the indicating device. The contents of the last store location which can be addressed in the table causes the intermediate register 13 again to be set to the initial address so that the representation of the characters on the indicating device 8 again begins from the beginning.

When the operator has recognized one of the representations as correct, he actuates a confirmation key 18, the output signal of which is supplied to the control device 19 of the machine. The control device 19 delivers a signal to the input locking control of the keyboard 1, the release circuit 10 and the signal control device 14, whereupon the locking of the keyboard input is released, the output of the control signals coming from the character generator 6 to further processing devices 11 is released and the blinking operation of the indicating device 8 is ended.

The idea of the invention can also be realized using a microcomputer which can take over the functions of the control device, of the said stores or store regions, of the register, of the comparator, of the character generator etc.

Apart from the example described, the idea of the invention can be realized in many other variants. For example, a multi-place indicating device can be used instead of a single-place one, in which case the input of an ambiguous item of information causes the simultaneous representation of a plurality of or all the associated characters. One of the characters can then be selected and released for output by actuating a selection input means, for example by displacement of a marking on the indicating device to the required character caused by key actuation or the input of a number designating the required display position.

The representation of the characters belonging to an ambiguous input can also be effected on a multi-place indicating device for the representation of the last character fed in, in context, the characters being able to be represented in succession at the input position.

It is also possible to dispense with a separate confirmation input means and to effect the confirmation by input of the next character.

Furthermore, it is conceivable to represent the characters belonging to an ambiguous input automatically with a delay in time, in which case actuation of a confirmation input means releases the output of the character then represented to a further processing unit; or the actuation of a selection input means causes representation of the next following character and the absence of a further actuation leads, after a delay in time, to the release of the character illustrated.

Instead of the character generator for point matrix representation selected in the embodiment described, one for deflection of a recording jet or another type of representation may be selected and another colour or a special marking may serve to emphasize a character belonging to an ambiguous input on the display, etc.

Claims

1. A circuit arrangement for a typewriter or like machines with a large stock of characters, the typewriter or like machine having an input keyboard, an input register providing an output of code words representing characters from the character stock and an indicating device for representing at least one character wherein some of the code words are ambiguous and represent more than one character in the character stock,

means are provided for representing the associated characters on the indicating device and selection means are provided enabling selection from the associated characters for further processing.

2. A circuit arrangement as claimed in claim 1, wherein the selection means comprises a selection input means and/or a confirmation input means for control of the feeding of selected characters to a further processing unit.

3. A circuit arrangement as claimed in claim 2, wherein a multi-place indicating device is provided and the circuit arrangement is constructed in such a manner that after the input of an ambiguous item of information, all the associated characters can be represented simultaneously on the indicating device and wherein one of the characters represented can be selected by actuation of the selection input means and/or of the confirmation input means.

4. A circuit arrangement as claimed in claim 2, wherein a one-piece indicating device is provided and the circuit arrangement is constructed in such a manner that after the input of an ambiguous item of input information, the associated characters can be represented in succession by actuation of the selection input means and be prepared for output to a further processing unit.

5. A circuit arrangement as claimed in claim 4, wherein the construction is such that the character just being represented by the indicating device can be fed on for further processing by actuation of the confirmation input means.

6. A circuit arrangement as claimed in claim 3, wherein a time delay device is provided which can be brought into action each time after the representation of a character associated with ambiguous input information on the indicating device, and after expiration of the delay time, the characters represented can be fed in for further processing.

7. A circuit arrangement as claimed in claim 2, wherein a single-place indicating device is provided and the circuit arrangement is constructed in such a manner that after the input of an ambiguous item of input information, the associated characters can be represented in succession with a delay in time and wherein the continuation of the representation can be interrupted by actuation of the selection and/or confirmation input means and the character just being represented can be fed in for further processing.

8. A circuit arrangement as claimed in any one of claims 2 to 7, wherein the code words of the characters associated with the ambiguous input information are contained in a first store or store portion and wherein a device is provided to check the input information fed in through the input register for umabiguity or ambiguity, and in the case of ambiguity the code words of the associated characters can be taken out of the first store or store portion and can be represented on the indicating device, the character selected by actuation of the selection input means and/or the confirmation input means can be released for further processing.

9. A circuit arrangement as claimed in claim 8, wherein data corresponding to the ambiguous input information are contained in a second store or store portion and can be supplied, together with the information fed into the input register, to a comparator for a comparison, and a control of the first store or store portion can be triggered by a positive result of the comparison characterising ambiguity.

10. A circuit arrangement as claimed in any one of claims 2 to 9, wherein a signal control device is provided and the circuit arrangement is constructed in such a manner that, after the input of an ambiguous item of input information, an acoustic signal transmitter can be controlled and/or a different mode of operation of the indicating device can be set.

11. A circuit arrangement as claimed in claim 10, wherein after actuation of the selection input means and/or of the confirmation input means, the signal control device can be caused to end the acoustic signal and/or the different mode of operation of the indicating device.

12. A circuit arrangement as claimed in any one of claims 2 to 11, wherein an input locking control is provided and the circuit arrangement is constructed in such a manner that, after the input of an ambiguous item of information, the input of further information can be blocked until the selection input means and/or the confirmation input means is actuated.

13. A circuit arrangement as claimed in any one of claims 2 to 12, wherein the code words representing the characters are supplied to a character generator for conversion into control signals for the control of a dot matrix representation device.

14. A circuit arrangement for a typewriter or like machine, substantially as described herein with reference to the drawing.

Printed for Her Majesty's Stationery Office by the Courier Press, Leamington Spa, 1983. Published by the Patent Office, 25 Southampton Buildings, London, WC2A 1AY, from which copies may be obtained.