United States Patent

Sauer

[15] **3,693,656**

[45] **Sept. 26, 1972**

[54] **DEVICE FOR ADDING AND DISTRIBUTING A LIQUID OR A GAS IN OTHER MEDIA**

[72] Inventor: **Theo Sauer**, Starnberg, Germany

[73] Assignee: **Agfa-Genaert Aktiengesellsehaft**, Leverkusen, Germany

[22] Filed: **Dec. 15, 1970**

[21] Appl. No.: **98,342**

[30] **Foreign Application Priority Data**

Dec. 18, 1969 Germany.....P 19 63 376.2

[52] **U.S. Cl.** **137/604**, 137/525.3, 239/410, 239/416.4, 239/417.3, 239/452, 239/535

[51] **Int. Cl.**.....**F16k 19/00**

[58] **Field of Search**.....137/604, 525.3; 239/407–411, 416.4, 417.3, 434, 452, 534, 535, 514

[56] **References Cited**

UNITED STATES PATENTS

1,925,173	9/1933	Chandler	239/452
3,334,819	8/1967	Olavson	239/534
1,474,677	11/1923	Krause	239/417.3
2,890,838	6/1959	Jannsen	239/534
3,182,978	5/1965	Reilly	239/534 X
3,502,103	3/1970	Verschuur	137/604 X

Primary Examiner—Robert G. Nilson
Attorney—Connolly and Hutz

[57] **ABSTRACT**

An arrangement for adding and dispersing a liquid or gas into another medium is characterized by a conducting pipe for the other liquid, having coaxially therein a mixing nozzle valve connected to an intake pipe for the one liquid with a substantially radially directed circular slot opening variably in its rotationally symmetric cross-section by the pressure from the one liquid which overcomes the pressure of a resilient disk at the top of the valve.

8 Claims, 2 Drawing Figures

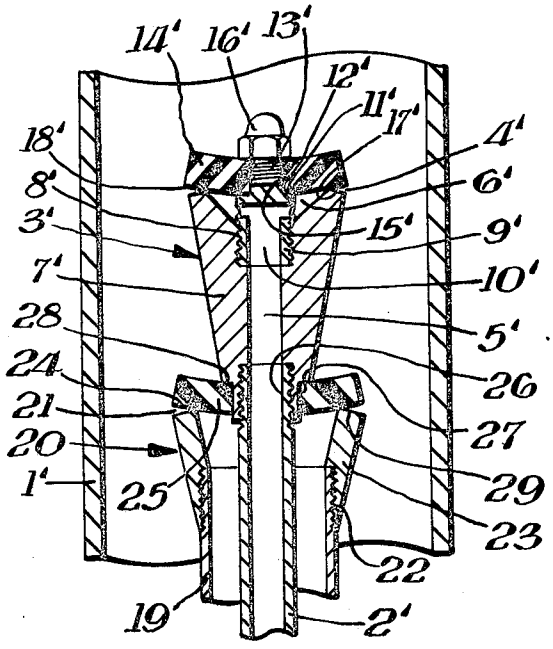

Fig. 1.

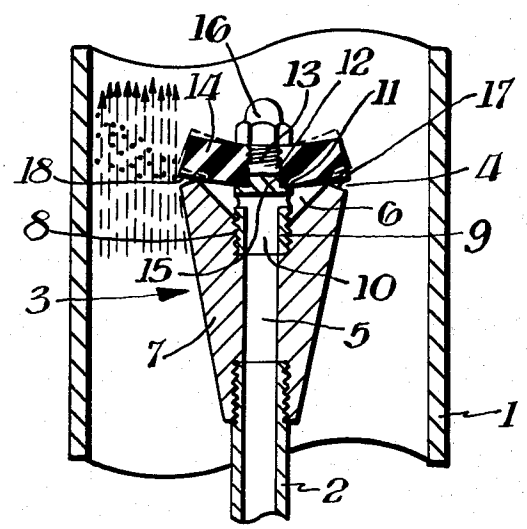
16
14
13
12
11
17
18
4
8
6
9
15
10
3
5
7
1
2

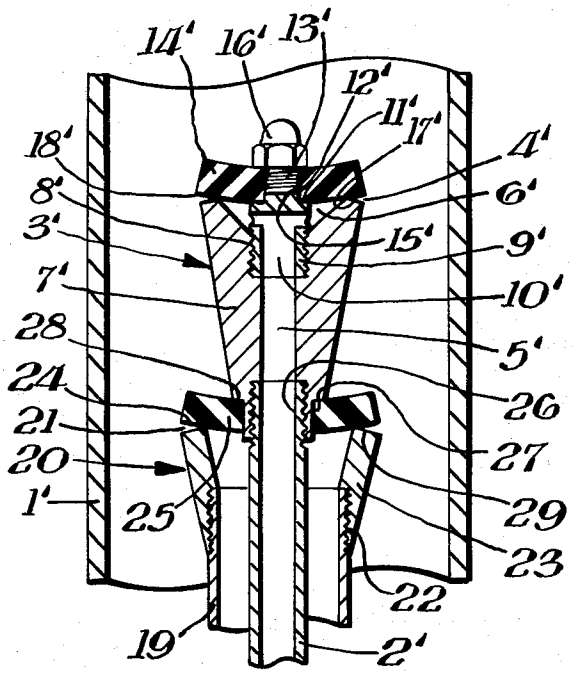
14'
16'
13'
12'
11'
17'
18'
4'
8'
6'
3'
15'
9'
7'
10'
28
5'
24
26
21
27
20
29
1'
25
23
22
19
2'

Fig. 2.

DEVICE FOR ADDING AND DISTRIBUTING A LIQUID OR A GAS IN OTHER MEDIA

BACKGROUND OF INVENTION

The invention relates to a device for the adding and distributing of a liquid or a gas in other media, liquid to be understood to mean flowable media of different viscosities and composition.

Devices are already known for the adding of one liquid to another, wherein the one liquid is conducted by means of a pressure conveyor, such as a geared pump, dosing pump, proportioning screw, or the like, and is delivered through the outlet opening or discharge opening of an intake pipe of the other liquid, the end of the intake pipe being arranged above or below the liquid level. Further devices, such as stirrers, endless screws, or the like, are required for mixing both liquids.

According to the British Pat. No. 872,426, a device for the distribution of a liquid in another liquid has been proposed, wherein one liquid is located in a vessel in a customary manner. Into the vessel or into the other liquid, an intake pipe is vertically arranged and in a stirring-shaft manner set in rotation by means of a driving motor, the intake pipe ending between two conical disks with their bases facing each other, of which one is made hollow in the form of a cone-shaped shell. Both disks are set toward each other at a fixed distance, so that the one liquid, conducted by means of a pump or the like, is guided through the intake pipe and should be discharged with centrifugal force through the constantly open slot between both disks. In this manner, both liquids may be intermixed. In order to make this mixing effect as best as possible, there may be mounted on the rotating intake pipe an additional or several agitating vanes. Furthermore, for the achievement of an improved mixing effect, there are arranged at the conical outer surfaces of both disks, at a distance and inclined thereto, rotationally symmetrical fins, which are to convey the flow of both liquids, similar to that of a Venturi tube. With the exclusion of the agitating vanes, however, there would not be achieved a satisfactory mixing effect by means of both of the other agents for the mixing, since by the ejection through the slot there are produced extensive and, due to the fins, nearly exclusively laminar flows of both liquids.

All of these known devices require, aside from the pressure conveyor, further driven devices for the liquid, the same as or similar to a stirrer. Moreover, driving motors are required with corresponding amounts of energy, whereby both in the preparation as well as in the operation, a very considerable expenditure is required. With these devices, a great disadvantage results from the fact that the discharge opening, regardless of construction, is always open at the intake pipe for one liquid to the other or even to the surrounding atmosphere, so that the one liquid even after the standstill of the pressure conveyor reaches into the other medium. Consequently, even when using a very precise dosing pump, an exact dosing is impossible; production returns or reaction processes may be reproduced with the same lack of precision. Furthermore, great expenditure is necessary for the supervision of these processes. The spillage lag may have its origin in a gradual pressure reduction in the liquid remaining in the intake pipe between the pressure conveyor and the discharge opening, the pressure also taking effect in the second medium, e.g., with a variable level of liquid over the discharge opening. Moreover, eventually solid reaction products may block the discharge opening with the stoppage of stirring.

The known devices are therefore not only expensive but also are hardly suitable for timely and quantitatively precise delivering and mixing processes, as for example is required in the preparation of photographic suspensions containing silver halide.

SUMMARY OF INVENTION

An object of this invention is to provide a device for the adding and distributing of one liquid into another one, wherein the disadvantages of the known devices are avoided.

A further object is to provide such a device which enables a timely and/or quantitatively very precise and consequently reproducible adding of one liquid into another and a good mixing effect with slight constructive and operational expenditures.

In accordance with this invention a pipe or the like is provided in which is coaxially arranged a mixing nozzle valve connected to an intake pipe with a nearly radially positioned circular slot situated in a plane perpendicular to the axis of the pipe. This slot variably opens in its rotationally symmetric cross-section against the pressure of a spring tension due to the pressure acting upon the one liquid. Due to this construction, any lag spillage of the liquid in the mixing or reaction chamber is avoided; similarly, there is avoidance of any dead space between the dosing pump and the circular slot. The pressure at the circular slot opposite the pressure from the dosing pump due to the spring pre-tension acts with particular advantage on the accuracy of the timely or quantiative addition of this liquid. Another considerable advantage is achieved in that the one liquid is delivered in the cross-current to the other liquid conducted in the pipe through the circular slot, hence at right angles to its flow direction. This thereby results in such a complete mixing effect that additional agitation may be completely eliminated. For a satisfactory intermixing of both liquids, none of the previously needed stirrers are required, so that in addition to the advantages related to production there also results a considerable saving on construction and operating means. This simplification simultaneously increases the operating reliability of the device and the possibility of the occurrence of operating disturbances and expensive production losses are essentially reduced.

In a particularly simple novel construction the circular slot consists of a valve body, rigid per se, connected to the intake pipe, rotationally symmetrical therewith, and containing a canal with a conical widening toward the circular slot. The free frontal annular surface of the valve body forms a wall of the circular slot. A rotationally symmetrical valve disk is installed under spring tension at the frontal surface of the valve. The disk has a circular surface area facing the frontal flange surface area with the disk surface forming the other wall of the circular slot. Furthermore the valve disk is made of a springy or resilient material and is centrally held at the valve body by means of spring tension. The valve body, roughly at the transition from the canal to the conical expansion, may have arranged by means of a screw

connection or the like an insert with a canal which first communicates with the canal of the valve body axially and finally proceeds radially somewhat in the direction toward the conical expansion or the circular slot. This transition canal may be divided into a plurality of small canals. Furthermore, a lug is axially arranged with a radial guiding section in a boring provided in the valve disk and mounted thereto by means of a nut and bolt. The lug engages under the plane of the circular slot to such an extent that the required spring tension of the valve disk is created by the pressing of its inner section on the lug and its outer section on the frontal ring surface of the valve body. Consequently, there are only three structural parts to be made for a mixing nozzle valve, so that the production costs for the device per se, but in relation to the above-named effects and advantages, are kept extremely low.

According to another novel design, the valve body is expanded in the direction from its connecting point with the inlet pipe to the circular slot in such a manner that the smallest circular cross-sectional area of aperture of the pipe for the other liquid and the circular slot are situated in a common plane, whereby the mixing effect, as a result of a relatively strong turbulence of the cross-current, are improved even more.

In accordance with another aspect of this invention there is arranged to the mixing nozzle valve with its circular slot directly and coaxially thereto a further similar mixing nozzle valve, connected by means of an inlet pipe. In such an embodiment a conical shell shaped valve casing is arranged on the end section of the further intake pipe with its free frontal flange surface representing the one wall of the further circular slot. On the section of the valve body in the interior of the intake pipe, an axial lug and a radial guideways for a corresponding boring of a further valve disk are provided with the axial distance of this lug to the free frontal flange surface of the valve casing being lower than the height of the further valve disk, whereby this valve disk too is affected by spring tension. As a result this embodiment maintains all of the above advantages of individual arrangements or mixing nozzle valves with an advantageous space-saving solution made possible which produces in the pipe a particularly closely adjacent arrangement of mixing or reaction areas.

THE DRAWINGS

FIG. 1 shows an arrangement for the adding and distributing of a liquid in another one in accordance with this invention; and

FIG. 2 shows an arrangement for the adding and distributing of two miscible liquids in another one, wherein both arrangements are intersected in the plane of their vertical axis.

DETAILED DESCRIPTION

According to FIG. 1 and also FIG. 2, an arrangement for the adding and distributing of a liquid into another liquid includes a pipe **1** or **1'** for conducting this other liquid. Coaxially arranged in pipe **1** or **1'** is a mixing nozzle valve **3** or **3'** connected to an intake pipe or tube **2** or **2'** for the one liquid, with a substantially radially directed circular slot **4** or **4'**. When slot **4** or **4'** is in the closed position shown in full lines it is substantially in a plane perpendicular to the axis of pipe **1** or **1'**.

The mixing nozzle valve **3, 3'** is composed of a symmetrical rotationally mounted valve body **7** or **7'**, rigid per se, containing a canal **5** or **5'** which communicates with a conical expansion area **6** or **6'** disposed toward the circular slot **4, 4'**. An insert **9** or **9'** is attached by means of a screw connection **8** or **8'** approximately at the transition from the canal **5, 5'** to the conical expansion **6, 6'** of the valve body **7, 7'** with a radially proceeding canal **10** or **10'**, divided into a plurality of small canals, first axially as a continuation of the canal **5, 5'** of the valve body **7, 7'** and finally somewhat in the direction toward the conical expansion **6, 6'** or the circular slot **4, 4'**. A lug or stop **11** or **11'** is axially arranged above and spaced from insert **9**, below a radial guide section **12** or **12'** and a threaded bolt **13** or **13'**. Valve disk **14** or **14'** made of a springy resilient material has a boring **15** or **15'** being centrally located for receiving the guide section **12** or **12'** and held by means of a nut **16** or **16'** against the stop or lug **11, 11'** of the insert **9, 9'**. Nut **16, 16'** is illustrated as a cap nut.

In this manner, the free frontal flange surface **17, 17'** of the valve body **7, 7'** represents the one wall of slot **4** or **4'**. The outer, rotating section, in the form of a circular flange surface **18** or **18'**, represents the other wall of the circular slot **4, 4'**.

Since the stop **11, 11'** is placed below the frontal flange surface **17, 17'**, the valve disk **14, 14'** which is flat in the unstressed condition presses on to the frontal ring surface **17, 17'** with its outer section **18, 18'** by means of its spring tension. In this position, indicated in the drawing in solid lines the circular slot **4, 4'** is closed. The closing is thus effectuated by the pressure of the spring tension in the valve disk **14, 14'**.

Now, if by means of a dosing pump (not shown) a liquid is conducted under pressure in the section between the dosing pump and the circular slot **4, 4'**, due to this pressure, the opposite pressure from the spring tension of the valve disk **14, 14'** is overcome whereby the circular slot **4, 4'** varying in its rotationally symmetrical cross-section, is opened. Thus, the one liquid conducted through the intake pipe **2, 2'**, canal **5, 5'**, the first axially and finally radially proceeding canal **10, 10'** and the conical expansion **6, 6'** is delivered in cross-current fashion through the opened circular slot **4, 4'**. In this respect valve disk **14, 14'** is lifted upwardly as shown in FIG. **1** in phantom. The liquid fed through pipe **2, 2'** thereby flows into the other liquid conducted in pipe **1, 1'** and is dispersed in it, as illustrated in FIG. **1** by dotted lines for the "flow lines" of the other liquid. Hence, all particles of the one liquid are intimately mixed with the particles of the other liquid by the action of the cross-current.

The action of the cross-current is intensified in that the valve body **7, 7'** in the direction from its connecting point for the intake pipe **2, 2'** to the circular slot **4, 4'** is conically expanded, whereby the smallest circular-ring-shaped cross-sectional opening of pipe **1, 1'** for the other liquid and the circular slot **4, 4'** are in approximately a common plane.

As soon as the dosing pump is stopped and consequently the pressure is relieved on the valve disk **14, 14'**, due to the force stored in the valve disk **14, 14'**, circular slot **4, 4'** automatically also closes, intensified by the spring tension in valve disk **14, 14'**. Consequently, any lagging spillage or leakage of a liquid

into the other liquid is stopped with great certainty, just as a contamination of the one liquid, now downstream from the circular slot 4, 4', by the other cannot set in.

FIG. 2 shows an arrangement for the purpose of delivering and distributing a further liquid into the other. As indicated therein a first mixing nozzle valve is provided essentially identical to the mixing nozzle valve 3 of FIG. 1, with a further mixing nozzle valve 20 connected to a further intake pipe 19 at a distance, surrounding like a jacket, the intake pipe 2' for the first mixing nozzle valve 3'. Mixing nozzle valve 20 has a circular slot 21 similar to circular slot 4' at least in its function.

The further mixing nozzle valve 20 consists of an approximately conical-shell-like valve casing 23 mounted on the end section of the further intake pipe 19 by means of a screw connection 22, which valve casing 23 with its free frontal flange surface 24 represents the one wall of the further circular slot 21. This arrangement also includes a further valve disk 25 which by means of its central boring 26 is conducted to a radial guideways 27 provided at the valve body 7' and by means of a stop 28, also mounted on valve body 7', is held against the frontal ring surface 24 of valve casing 23 with its outer rotating section 29, which represents the other wall of the circular slot 21. The spring tension, just as with valve disk 14', of valve disk 25, is imparted in that the axial distance of the stop 28 to the frontal flange surface 24 has smaller measurements than the height of the approximately level valve disk 25 in the unstressed condition.

Having the manner of operation of both circular slots 4' and 21 the same, the arrangement of FIG. 2 not only provides a space-saving arrangement, but also — in case the media react with each other — makes possible a particularly closely adjacent arrangement of two reaction sections.

The invention, of course, is not limited to the exemplary embodiments shown. Thus, various designs, of the valve body, for example, of the insert, or of the valve disk per se, may be selected. Additionally, more than two circular slots may be used in the continuation of the building of the second exemplary embodiment without thereby deviating from the basic thought of the invention, to provide directly at the inlet point of the one liquid into the other liquid a type of closing member which is opened against the pressure of the spring tension only with respect to the supply of the one liquid by the pressure delivered thereto. It is also possible to construct the discharge point, the circular slot, in such a manner that the one liquid is delivered in cross-current into the other liquid, particularly effectively as a result of the pressure in the one liquid, so that an extensive mixing effect is achieved without additional means, as well as to make such processes reproducible by means of the thus-achieved precision of the process.

What is claimed is:

1. An arrangement for the adding and dispersing of one flowable substance into another, characterized in a pipe for conducting the other substance therethrough, a mixing nozzle valve coaxially arranged in said pipe, an intake tube connected to and communicating with said valve for conducting the one substance to said valve, said valve having a nearly radially directed slot open variably in its rotationally symmetric cross-section, spring pretension means for closing said slot in such a manner that the pretension is overcome by the pressure of the one substance flowing in said valve, said valve including a valve body, a canal in said body in flowable communication with said intake tube, said canal terminating in a conical expansion section disposed toward said slot, a valve disk disposed toward said body for closing said expansion section, said body having an annular free frontal surface which defines one wall of said slot, and said disk having an annular frontal surface facing said one wall to define the other wall of said slot, an insert being connected to said valve body at the transition of said canal with said expansion section, said insert having flow means including a plurality of individual passageways causing communication between said canal and said expansion section, said flow means being disposed first axially in communication with said canal and then radially in communication with said expansion section, said disk having an axial opening through which said insert extends, said insert having a stop shoulder abutting against the underside of said disk, and mounting means on said insert reacting against the upper side of said disk whereby said mounting means cooperates with said stop shoulder to create the pretension in said disk.

2. An arrangement as set forth in claim 1 wherein said insert is threadably connected to said valve body, said inset having an externally threaded guide section extending through said disk opening, and said mounting means including a nut engaged on said guide section.

3. An arrangement as set forth in claim 2 wherein said valve body is frusto-conically shaped tapering outwardly from its connection to said tube outwardly to said slot whereby the smallest cross-sectional open area of said pipe is coplanar with said slot.

4. An arrangement as set forth in claim 3 wherein a further disk-valve-tube combination is disposed concentrically with the first such combination for adding and dispersing a further flowable substance into said pipe, and one of said combinations being around the other combination and upstream therefrom.

5. An arrangement as set forth in claim 4 wherein the valve body of the upstream combination includes a frustoconical casing terminating in an annular frontal surface to define one wall of its slot, an upstream disk having an annular frontal surface to define the other wall of its slot, the valve body in the other combination having a shoulder abutting against the upper surface of said upstream disk to act as a stop therefor, said valve body having a guideway extending through an axial opening in said upstream disk, and the distance between said stop abutting against upper surface of said upstream disk and said frontal surface of said upstream disk being less than the thickness of said upstream disk when said upstream disk is in its unstressed condition whereby said upstream disk is under pretension.

6. An arrangement as set forth in claim 1 wherein a further disk-valve-tube combination is disposed concentrically with the first such combination for adding and dispersing a further flowable substance into said pipe, and one of said combinations being around the other combination and the other combination and upstream therefrom.

7. An arrangement as set forth in claim 6 wherein the valve body and said frontal surface of said upstream disk being less than the thickness of said upstream disk when said upstream disk is in its unstressed condition whereby said upstream disk is under pretension.

8. An arrangement as set forth in claim 1 wherein said disk is made of resilient material, and said pretension means urges said disk against said body.

* * * * *