July 3, 1956 H. T. BACKHOUSE 2,753,184

SHEET FEEDING MECHANISMS

Filed Aug. 13, 1952

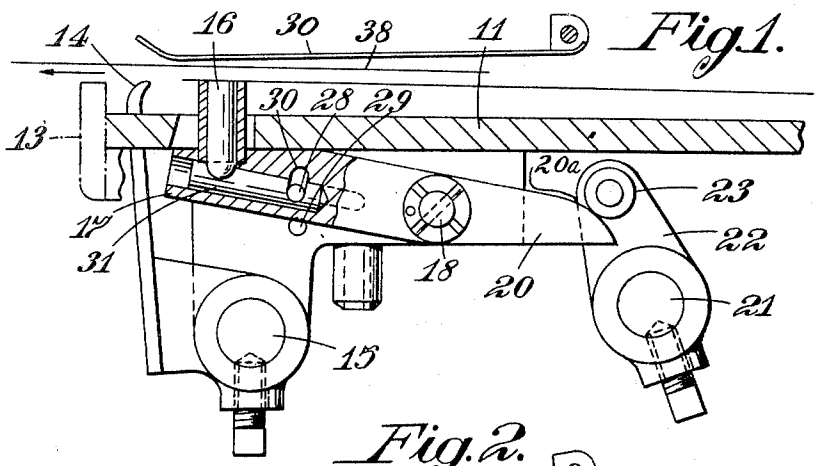

Fig.1.

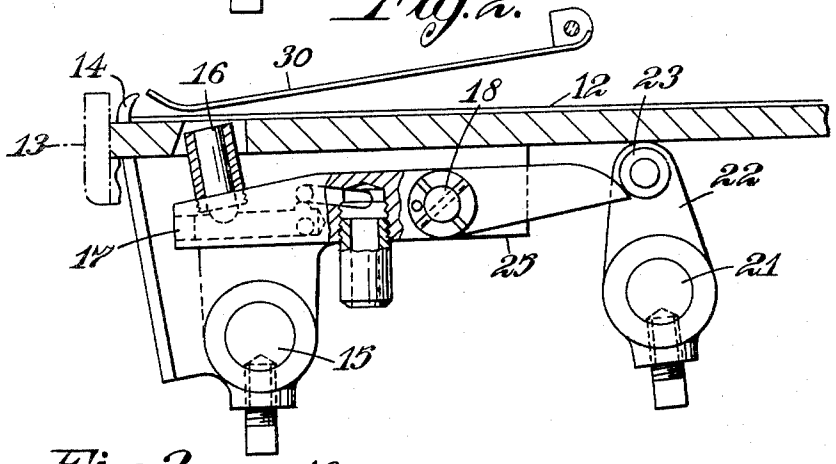

Fig.2.

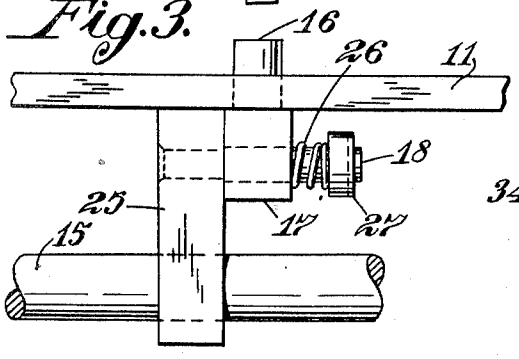

Fig.3.

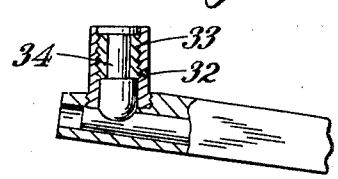

Fig.4.

Inventor:
H. T. Backhouse
By Williams, Rich & Munn
attys.

United States Patent Office 2,753,184 Patented July 3, 1956

2,753,184

SHEET FEEDING MECHANISMS

Headley Townsend Backhouse, Nassau, Bahamas

Application August 13, 1952, Serial No. 304,103

Claims priority, application Great Britain September 3, 1951

3 Claims. (Cl. 271—60)

The invention relates to sheet feeding mechanisms of the kind which are employed in conjunction with printing and like machines operating on single sheets of paper, card and the like and in which the sheet are fed by conveyor means onto a feed-board where registration of each sheet in turn is effected against front lays, usually also against side lays, and are then taken individually to the printing or other machine. The sheets may be conveyed to the feed-board in the form of a continuous stream of partly overlapping sheets.

A difficulty which arises with mechanisms of the above kind is that the front edge of the sheet which is approaching the front lays sometimes rises above the lays and passes over the lays without registration and out of the proper time. This difficulty is especially pronounced when, as is frequently desirable, the registration of the front edge of each sheet is effected beneath the rear portion of the preceding sheet during the removal thereof. In some constructions of mechanisms of the above kind a preliminary registration of the sheets is effected by means of preliminary lays which move with the sheets after engagement thereby and serve to slow down the sheets before the sheets reach the front lays as well as to effect a preliminary registration. The above-mentioned difficulty also arises with such preliminary lays.

It has already been proposed (see British specifications Nos. 446,886 and 564,322) to provide a suction gripper operating below a feed-board and arranged to engage the front portion of each sheet as it approaches the lays and to travel with the sheet, while holding the sheet down upon the board, towards the lays. Such known grippers are given a reciprocatory movement towards and from the lays with, in the case of the constructions proposed in British specification No. 446,886, a rising and falling movement.

According to the present invention and with a view to reducing the above difficulty in a particularly simple and effective manner there is provided beneath the feed-board in a sheet feeding mechanism of the above kind, a suction gripper which projects upwardly through the board at a position to engage the front edge portion of a sheet as it approaches the front lays, and which is carried on one end of an arm of which the effective length extends lengthwise beneath the board and which is supported at its other end for rocking movement about a transverse axis at a fixed position beneath the board, in combination with means to rock the arm about the said axis so as to raise the gripper to engage and grip the underside of each sheet before it reaches the front lays and then to lower the gripper so as to draw the sheet down on to the board.

Preferably the arm extends forwardly (i. e. in the direction of sheet feed) from the aforesaid axis so that the nozzle mouth, as it moves in an arcuate path downwardly with the sheet, also has a component of movement in the feeding direction and tends to travel with the sheet.

The means for rocking the shaft conveniently comprise a rearward extension of the arm from the rocking axis and an abutment carried on the free end of an arm

extending from a transverse rock-shaft beneath the board, the abutment being given an arcuate movement as the shaft oscillates and in that movement to engage the extension aforesaid and to move the gripper arm in one direction, the return movement being effected by spring means. It is also preferred that it is the movement of the gripper in the downward direction which is effected by the spring means.

A further preferred feature is that valve means are incorporated arranged to control the admission of suction to the gripper in time to grip the sheet and then, when the sheet has been drawn down on to the board to admit air to the gripper to release the sheet.

One specific construction of a sheet feeding mechanism embodying the above and other features will now be described by way of example of the invention and with reference to the drawings, in which:

Figures 1 and 2 are side views, partly in section, showing the parts provided by the invention in two different positions,

Figure 3 is a front view of some of the parts shown in Figure 1, and

Figure 4 is a section through the gripper nozzle.

In this example the mechanism has a feed-board 11 to which the sheets 12 are fed, in known manner, in the form of a continuous stream of partly overlapping sheets. At the front edge of the feed-board there are, in this example, two front lays 13 which project upwardly above the surface of the board during registration of each sheet and are then withdrawn below the board to facilitate removal of the sheet. Associated with each lay there is an auxiliary catch lay 13 or stop 14 in the form of an arm which extends upwardly just behind the main lay 13 (in the direction of feed) and is carried by a shaft 15 below the board. The catch lay 14 has the upper end curved or hooked towards the advancing sheets and in use the shaft 15 is oscillated to cause the catch lay or stop 14 to travel first towards the advancing sheets during which time it will arrest and pre-register the leading sheet if this sheet is ahead of its proper timing, then to dwell momentarily to wait for and register the sheet if it is properly timed or late and then to reverse and travel back past the main lays at about half the speed of the main sheet stream. The timing of the mechanism is, as shown in Figures 1 and 2, such that the preliminary registration of each sheet is effected while the rear portion of the previous sheet is being removed over the top of the lays 13.

Just behind each auxiliary catch lay 14 there is a suction gripper 16. The gripper 16 is in the form of a nozzle which may project upwardly through the feed-board and is carried at the free end of a lever arm 17, pivotally supported on a spindle 18 below the board 11 for oscillation about an axis transverse to the feeding direction. The lever arm 17 has a rearward extension 20 with its free end formed with a cam surface. A second transverse shaft 21 below the board 11 carries an upwardly directed arm 22 with a roller 23 on its side at the free end. This roller 23 co-operates with the cam surface on the lever arm 17 to depress the rearward extension thereof and so to move the gripper upwardly as the roller 23 moves forwardly. The return downward movement of the gripper 16 is effected by the spring about to be described.

The spindle 18 carrying the lever arm 20 is supported in a bracket 25 dependent from the board 11 and also serving as a bearing for the shaft 15 carrying the auxiliary lays 14. Surrounding the spindle 18 there is a coil spring 26 which acts between a head 27 on the spindle 18 and the arm 17 to serve both as a return spring for the arm and also as a compression spring urging the arm into pressure contact with a side face of the bracket 25. This side face has two ports 28, 29 one above the other in front of the spindle 18. The upper port 28 is continuously

connected to a source of suction and the lower port 29 is connected to atmosphere. The lever arm 20 has a single elongated port 30 which leads through passageway 31 to the orifice of the suction gripper 16 and, when the gripper 16 is in its raised position (see Figure 1), registers with the suction port 28 to connect the gripper to suction and when the gripper moves down to the level of the board (see Figure 2) shuts off the suction and connects the gripper to atmosphere through port 29.

It should be appreciated that as the mouth of the gripper nozzle 16 is above and in front of the spindle 13 the mouth has a component of forward movement as the gripper nozzle 16 is lowered.

In use the gripper 16 is raised above the level of the board immediately after the front edge of a sheet to be registered has passed over it (see Figure 1) thereby to grip the sheet, is then lowered to draw the sheet down on to the board 11 and to ensure that the front edge is presented for engagement with the auxiliary lays 14, and continues its movement below the surface of the board after suction has been cut off.

For the purpose of providing some measure of adjustment of the degree of suction at the nozzle orifice (e. g. to adjust the device for use on thin paper or on card) there may be provided in the wall of the nozzle one or more (e. g. two) holes 32 leading to the atmosphere and there may be a short nipple 33 screwed into the nozzle for adjustment to cover or uncover the holes. The nipple 33 may be flush with the nozzle orifice when the holes 32 are uncovered and below the orifice when they are covered thus providing a double adjustment by varying the effective area of the mouth of the nozzle and by varying the degree of effective suction. The nipple may have a hexagonal section bore 34 and be adjusted by means of a key fitting into the bore.

It is a feature of the mechanism forming the subject of this example that the length of the path of the sheets, between the position at which they cease to be positively carried by the conveyor and the position at which they engage the front lays, is very short. Consequently it is unnecessary to provide suction grippers or other control means which have substantial movement in the feeding direction as has been necessary to carry the sheets up to the front lays in earlier proposals where the length of the path aforesaid has been long and more than the sheets will traverse under their momentum or without positive feed.

The front lays used in the present invention are, preferably, without the cover plates or horizontally extending portions suggested in some earlier proposals and under which the front edge portions of the sheets are to be received immediately before registration.

When, as in the drawing, such cover plates are omitted, there may be provided smoother bars, indicated diagrammatically at 30, which move downwardly after the suction gripper has released the sheet, to press the sheet against the board. Such smoother bars will be lowered after the rear end of the preceding sheet 38 has moved from under the bars and will be raised after registration to permit removal of the sheet.

I claim:

1. A sheet feeding mechanism of the kind embodying a feed-board, conveyor means by which a succession of sheets are fed along the board and front lays against which the leading edge of each sheet on the board is registered in turn, characterized by an arm of fixed length positioned below the feed-board with its effective length extending in the direction of feed of the sheets to the front lays, a suction gripper fixed to that end of the arm which is nearer to the front lays and arranged for projection upwardly through the board at a position to engage the front edge portion of a sheet as it approaches the front lays, means for supporting the arm for rocking movement of the arm about a transverse axis at a fixed position beneath the board, means to rock the arm about said axis whereby the gripper is given an arcuate rocking movement about said axis to raise the gripper above the feed-board to engage the underside of each sheet before the sheet reaches the front lays and then to lower the gripper at least to the level of the board to draw the sheet down on to the board, a fixed bracket at one side of the arm, the bracket and arm being formed with surfaces which mate with one another as the arm rocks, spring means urging the mating faces into pressure-sealing contact, said bracket having in its mating face two ports with connections to atmosphere and to a source of suction respectively, said arm having in its mating face a single port with a throughway leading to the gripper, the ports being so positioned that when the gripper is raised above the level of the feed-board the port in the arms registers with the port in the bracket having the suction connection and when the gripper is lowered the port in the arm registers with the port having the connection to atmosphere, whereby the gripper is opened to suction as the gripper rises above the feed-board and when the gripper is lowered to the level of the board the gripper is cut off from the suction and opened to atmosphere.

2. A sheet feeding mechanism as claimed in claim 1 in which the gripper is of tubular form and has a tubular insert movable axially therein from a position in which it is level with the mouth of the gripper to a position in which it is below the said mouth.

3. A sheet feeding mechanism as claimed in claim 2 in which there is a bleed hole through the tubular wall of the gripper and the insert is axially movable to cover and uncover the said bleed hole.

References Cited in the file of this patent

UNITED STATES PATENTS

1,993,240	Ciolino	Mar. 5, 1935
2,011,776	Reinartz	Aug. 20, 1935
2,087,997	Reinartz	July 27, 1937