United States Patent

[11] **3,585,360**

[72] Inventors **Athel R. Young; William F. Trelc, both of Boonville, Mo.**

[21] Appl. No. **839,953**
[22] Filed **July 8, 1969**
[45] Patented **June 15, 1971**
[73] Assignee **McGraw-Edison Company Elgin, Ill.**

[54] **PORTABLE ELECTRIC COOKING APPLIANCE**
9 Claims, 7 Drawing Figs.

[52] **U.S. Cl.** **219/405,** 99/385, 99/401, 219/349, 219/408, 219/413
[51] **Int. Cl.** **F27d 11/02**
[50] **Field of Search** 219/386, 405-4,-2, 227, 413-2, 533,-8, 390-1, 432-3, 347-9; 126/200, 274; 99/385, 401

[56] **References Cited**

UNITED STATES PATENTS

2,078,840	4/1937	Dorl et al.	219/402 X
3,036,192	5/1962	Fry	219/391
3,152,243	10/1964	Andrews	219/405
3,161,755	12/1964	Tilus	219/405 X
3,193,663	7/1965	Budich et al.	219/405
3,387,601	6/1968	Buerki et al.	219/393 X

Primary Examiner—Volodymyr Y. Mayewsky
Attorney—Charles F. Lind

ABSTRACT: This portable electric cooking appliance has an open front case provided with a unitary front ledge, bottom wall and rear wall interconnected across rounded lower front and rear interior corners. Heating elements traversing the case enclosure are supported by the case walls and by a bus bar located outside of the enclosure so that easy after use cleaning of both the case and heating elements is readily possible. The enclosure door is easily removable by interfitting separable door tab and case cooperation, and the transparent glass window overlaps the inside of the door panel and is trapped between a fixed door flange and a flange of a movable bracket held in place opposite the door handle by a common securing screw.

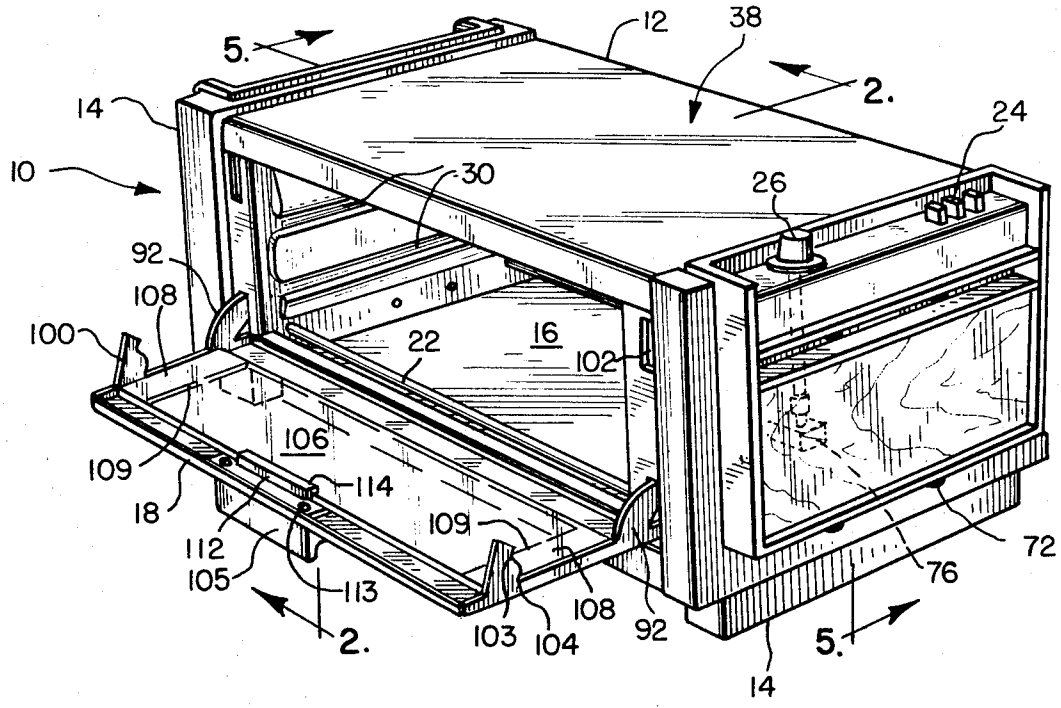

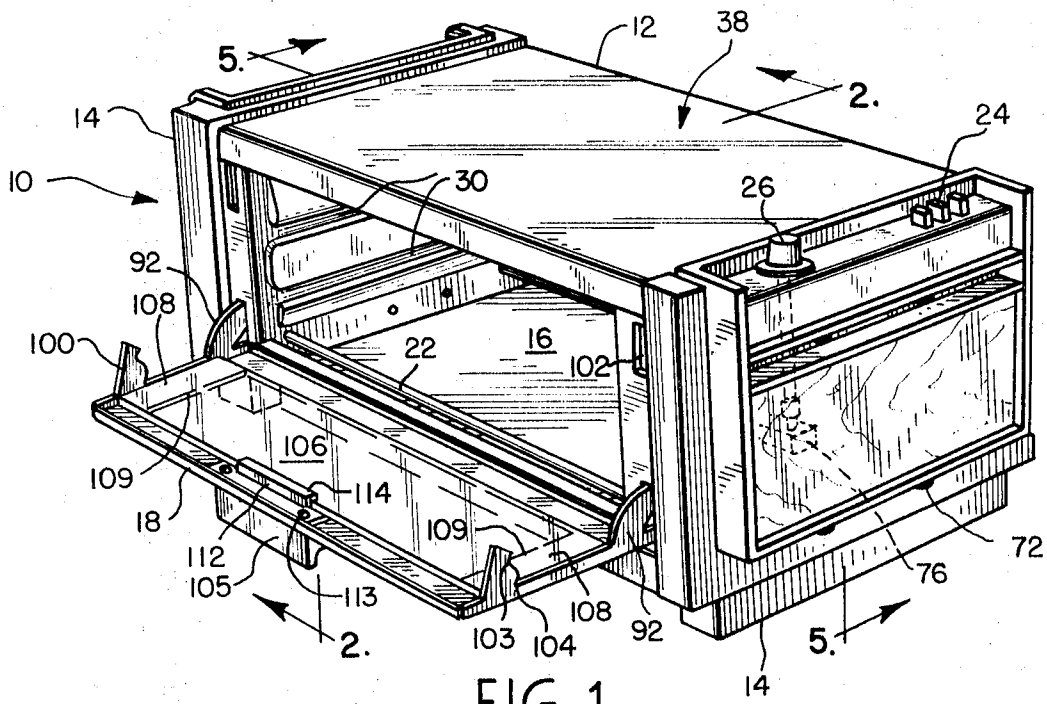

FIG. 1

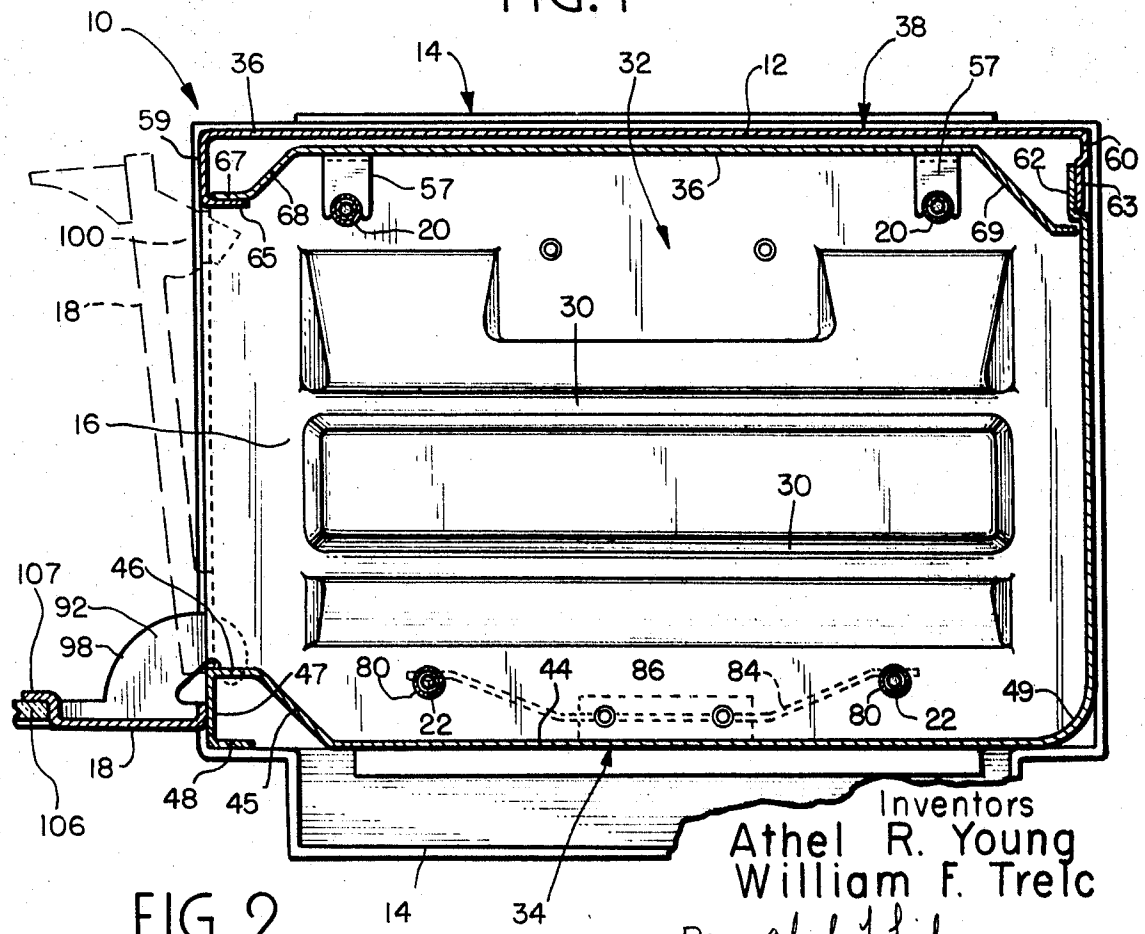

FIG. 2

Inventors
Athel R. Young
William F. Trelc
By Charles T. Lind
Attorney

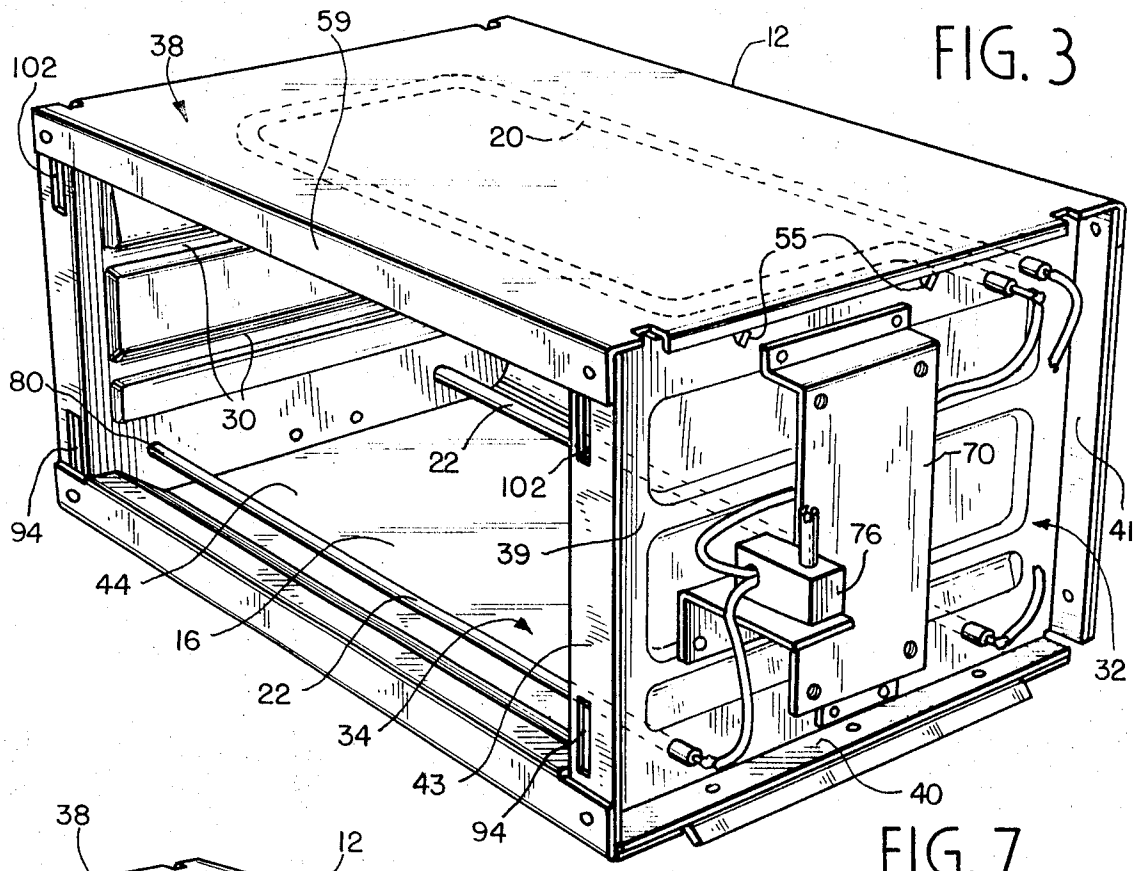

FIG. 3

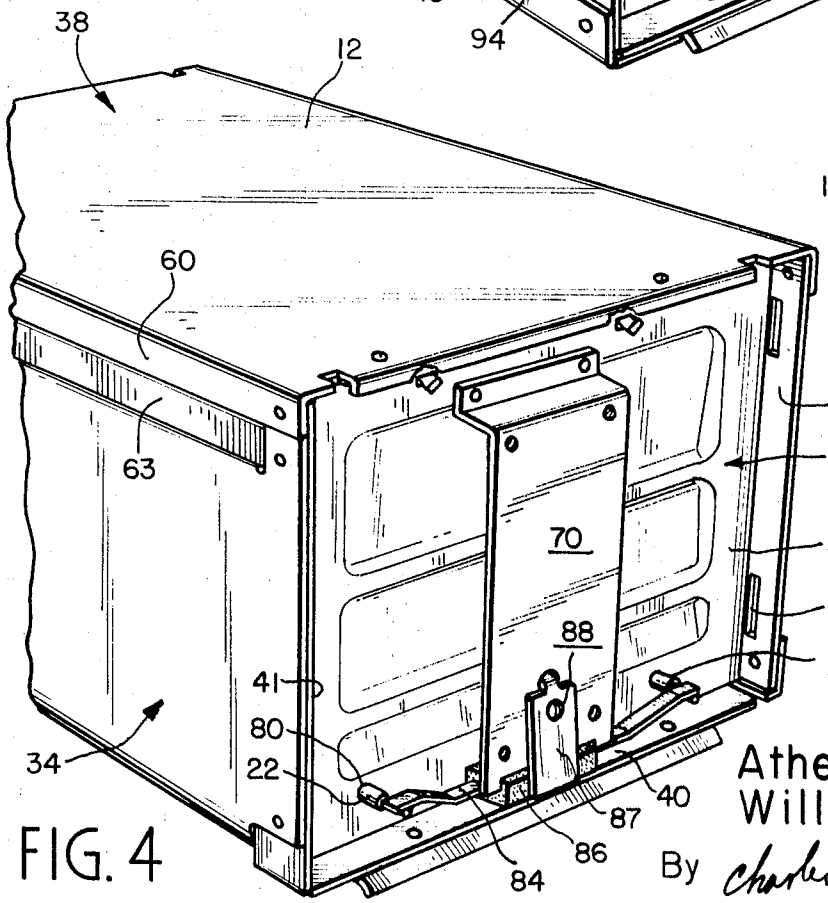

FIG. 4

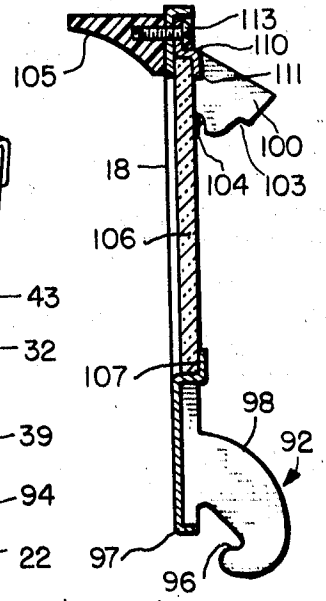

FIG. 7

Inventors
Athel R. Young
William F. Trelc
By Charles F. Lind
Attorney

FIG. 5

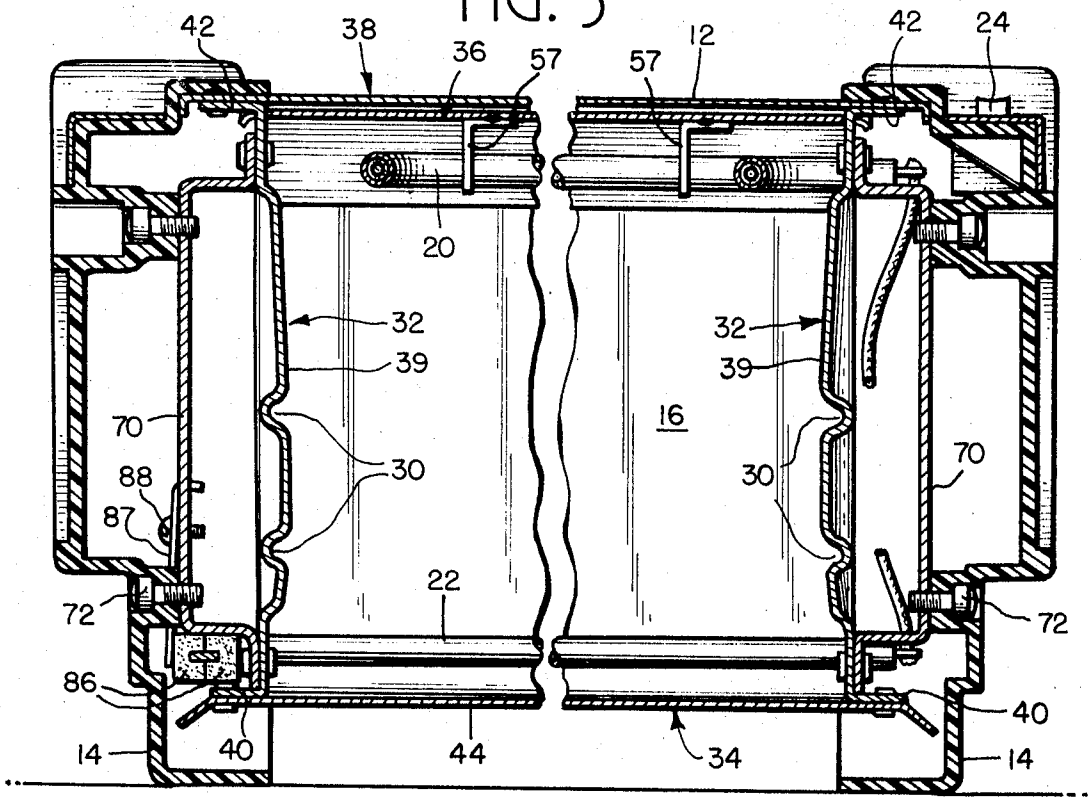

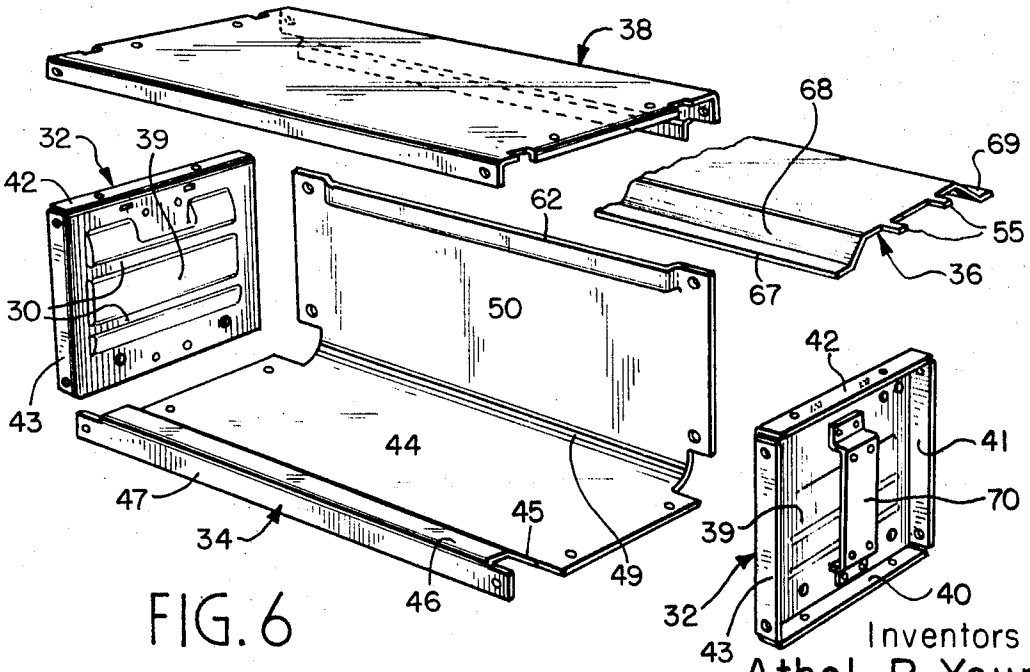

FIG. 6

Inventors
Athel R. Young
William F. Trelc

By Charles F. Lind
Attorney

PORTABLE ELECTRIC COOKING APPLIANCE

This invention relates to a portable electric broiler or oven-type cooking appliance that can be economically manufactured while yet having a permanent construction which can be readily maintained and cleaned after use.

A typical portable electrical broiler or oven type cooking appliance has a metal case and insulating support pedestals, and electric heating elements in the case enclosure provide the heat source for cooking. Conventional sheet metal case construction is somewhat expensive and difficult to fabricate and also commonly has deep interior corners that are difficult to clean after use. The bracket support of the heating elements even further burdens the difficult task of maintaining a thoroughly cleaned unit.

The subject portable electric cooking appliance has improved case construction which provides for rounded lower front and rear corners formed from a single piece for easy cleaning. The lower heating elements are supported solely by structure defining or outside the cooking enclosure and without any brackets to provide for easy and complete cleaning of the unit. For added versatility, the enclosure door is removably hinged to the enclosure case by a specifically curved door tab element and a cooperating case structure.

Accordingly, a main object of this invention is to provide a portable electric cooking appliance having an easily cleaned cooking enclosure case construction formed with lower front and rear rounded corners formed from a single piece of sheet metal.

Another object of this invention is to provide a portable electric cooking appliance having heating elements in the appliance enclosure secured entirely by structure defining or located outside of the enclosure so that the heating elements as well as the surrounding enclosure structure can be readily and thoroughly cleaned.

A further object of this invention is to provide an improved door construction which can be readily removed from the case, and further which has a glass window held in place straddling the door opening by a movable bracket secured to and opposite the door handle.

These and other objects of this invention will be more fully understood after reviewing the following specification and accompanying drawings forming a part thereof:

FIG. 1 is a perspective view of a preferred embodiment of the subject portable electric cooking appliance, showing the door in the opened position;

FIG. 2 is a view as seen generally from line 2–2 in FIG. 1, showing also in phantom the door in a partially closed position;

FIG. 3 is a perspective view similar to that shown in FIG. 1, except with the end pedestals and door removed;

FIG. 4 is a perspective view of the case showing the opposite end from that seen in FIG. 3 and the rear of the case;

FIG. 5 is a sectional view as seen generally from line 5–5 in FIG. 1;

FIG. 6 is an exploded perspective view showing the various components used to fabricate the case shown assembled in the other figures; and

FIG. 7 is a sectional view as seen generally from line 7–7 of FIG. 1, showing details of the door construction.

Referring now to FIG. 1, the unit 10 consists of a case 12 of sheet metal and end pedestals 14 of heat resistant plastic or the like. The case 12 defines a front open enclosure 16, and a door 18 is suitably pivoted to the case to close the front of the enclosure 16. An upper heating element 20 (FIG. 2) is in the enclosure suitable for broiling, and a lower heating element 22 is in the enclosure suitable for baking. Appropriate controls are located on one pedestal and include on-off selectors 24 for the heating elements and a thermostat control knob 26. A removable tray (not shown) can slide in and out of the enclosure of tracks 30 formed on the case sidewalls, and a suitable baking or broiling rack (not shown) can be supported on the tray in a conventional manner for supporting the product to be cooked within the enclosure.

It will be understood that the unit operates to cook food stuff upon the selective heating of the upper or lower heating element. The unit can be operated with the door closed, with the door partially opened, or even with the door totally removed.

Referring now to FIG. 6 for the specific construction of the case, two end pieces 32, a bottom and rear wall piece 34, an inner top wall piece 36 and an outer top wall piece 38 are secured together by rivets, screws, tabs or the like to form the assembled case. Each end piece 32 has a central wall panel 39 which can be shaped in appropriate equipment to form the tray holding tracks 30, preferably with rounded edges to permit easy cleaning. Flanges 40, 41, 42 and 43 are folded at right angles to the central panel 39 and serve as means for connection thereto of the bottom and rear wall piece 34 and for support of the outer top piece 38. In this regard, bottom panel 44 has marginal end edges that underlie the lower flanges 40 of the end pieces and are secured thereto by rivets. The front and rear portions adjacent this panel are notched to fit between and abut the center panels 39 of the end pieces when assembled.

Specifically, front retainer panel 45 (FIG. 2) slopes upwardly from the bottom panel 44 to ledge 46 and the continuation of this piece provides a front panel 47 and an underlying lip 48. The front panel 47 overlaps and is secured by rivets to the front flanges 43 of the end pieces 32. Similarly, the rear notched portion adjacent the bottom panel fits between the end pieces and curves upwardly about a large radius to provide a rounded rear lower corner 49. The rear panel 50 has marginal edges that overlap and are secured to the rear flanges 41 of the end pieces 32 rivets. This one piece fabrication of interior corners across the front and rear of the unit provides that the unit can be easily cleaned.

The inner top panel 36 extends between the end pieces 32 and is secured thereto by tabs 55 fitted through openings in the end pieces and twisted over as required. Brackets 57 formed from inner top wall 36 straddle and hold in place the upper heating element 20. The outer top wall 38 overlaps the top flanges 42 of the end pieces and also has full width front and rear panels 59 and 60 that overlap the front flanges 43 and the rear flanges 41 respectively, of the end pieces. Rivets hold the overlapped front and rear end piece flanges and the front and rear top wall panels together. The separate inner and outer top wall pieces 36 and 38 provide means for securing the upper heat elements 20 while yet maintaining a smooth and unmarred exposed top surface of the unit 10.

The medial upper part of the rear panel 50 is recessed as at 62 to underlie the offset lower panel 63 of the outer top wall piece 38, and screws hold these elements together. A front lip 65 formed from the upper panel 59 of the outer top wall piece 38 fits between the end wall pieces 32 and thereby provides a smooth rounded upper corner of the unit. This lip further overlies a front flange section 67 of the inner top wall piece 36, and a rearwardly and upwardly sloping panel 68 from the flange provides a smooth rounded interior configuration to the oven, as well as serves to reflect heat from the adjacent heating element 20 toward the interior of the enclosure. Rear reflector panel 69 likewise slopes downwardly and abuts the rear wall of the unit.

Spacer plates 70 are riveted to the end pieces 32 and have openings therein to receive screws 72 for removably securing the pedestals 14 to the case 12. Enclosed within the space defined between each pedestal and adjacent end piece appropriate electrical connection can be made for the upper and lower heating elements. This includes the on-off control or selector switch (not shown) actuated by buttons 24 and a thermostat 76, which is adjusted externally by the control knob 26 connected thereto by appropriate linkage (not shown).

Also of interest to the subject invention is the fact that the lower heating element 22 is formed as separate pieces and extend through openings 80 in the end pieces 32 spaced above the bottom panel 44 of the unit. This permits the user of the appliance to clean beneath the heat element effectively and easily since there are no supporting brackets or the like within

the enclosure holding the heat elements. A bus bar connection **84** (FIG. **4**) is made between corresponding ends of the separate elements forming the lower heat element **22** and is effective both to hold the elements in place within the case and to electrically connect the elements together in a series connection. The bar **84** is held in C-shaped insulator blocks **86**, which blocks in turn are confined between the end piece **32** and an overlying clamp **87** supported by means of a self-tapping screw **88** to the end piece bracket **70**. The unit can be assembled by fitting the unconnected ends of the elements initially through the end piece where the insulator blocks **86** will be located, through the oven enclosure, and out the opposite end piece. After the heat elements are clamped in place, all electrical connections needed at the free ends of the element for the thermostat or selector switch can be made.

Another important aspect of this invention is the construction of the door **18** so that it can be removed from the unit completely or held in various partly opened positions as desired. The door is formed from a single sheet having peripheral flanges folded rearwardly from the main center panel. On the lower edge of each side flange a tongue extension **92** is formed which is adapted to fit into an opening **94** in the case front flange **43**. The tongue includes a latch surface **94** which extends parallel to but spaced from the adjacent lower door flange **97** a distance slightly in excess of the thickness of the front end piece flange and terminates rearwardly of the inside face of door. The latch surface **96** binds on the rear face of the end piece flange while supporting the door fully opened in a horizontal cantilevered fashion where the lower front door flange abuts the lower case flange. From this position, the door can be lifted slightly until the latch clears the case flange to remove it from the case opening **94** for the complete removal of the door. On the other hand, the remote side **98** of the tongue between the latch surface and door proper is rounded and is only slightly narrower than the opening **94** when the door is closed so that the door can be opened without the tongue becoming accidentally disengaged from the case opening **94**. It is understood that tabs **100** are extended from the door side flanges to fit within case openings **102**, downwardly facing notches **103** and **104** on the tabs being effective to hold the door either in an ajar or a closed position, so that the door is opened completely by lifting up initially on handle **105** until the notches clear the opening periphery.

A glass window is provided on the door which glass **106** covers an opening formed in the door. The lower edge of the opening has a flange **107** formed from the door panel on which the piece of glass **106** rests, and the opposite ends **108** of the glass extend beyond the periphery **109** of the opening and thereby engage the rear side of the door plate. A removable bracket **110** is supported on the inner side of the door panel and has a flange **111** which embraces the glass and thereby holds it against the lower door flange **107**. The door handle **105** is located opposite the separate bracket **108** and the two are secured together by screws **113** extended through the bracket and threaded into the handle. In this manner, all connections for the handle and glass are hidden and the assembly can be readily taken apart and cleaned as required.

What we claim is:

1. A portable electric cooking appliance, comprising a sheet metal case and a pair of insulating material end pedestals supporting the case, said case including main bottom and top panels, opposed end panels, and a rear panel all fixed relative to one another and defining an open front enclosure; an electric heating element disposed in the enclosure in spaced adjacent relationship to one main panel and extending through openings in the opposed end panels, insulating means surrounding the heating element adjacent the end panels and being received and snugly fitted within openings therein for supporting the heating element laterally within the case and the heating element having no bracket attachment from the one main panel; and mounting means between only one of the end panels of the case and the adjacent end pedestal for holding the heating element axially within the case, said mounting means including an electrically conductive rigid bar mechanically and electrically connected to the heating element and an insulator element snugly embracing rigid bars and securing but electronically insulating the bar relative to the one end panel.

2. A portable electrical cooking appliance according to claim **1**, further providing a case front panel across the lower extent of the enclosure opening and a case retainer panel inclined between the bottom panel and the front panel and facing the heating element; and said front panel, retainer panel, bottom panel and rear panel being formed from a single piece of sheet metal having rounded corner junctions between the adjacent panels.

3. A portable electric cooking appliance according to claim **1**, further providing front case flanges defining the opposite side extents of the enclosure opening and each having a lower opening therein, and wherein a door is removably supported relative to the appliance to close the open front of the enclosure, said door including a pair of spaced tongues projecting from the rear face of the door and adapted to fit within the case flange openings, each tongue having a latch surface spaced below and facing the lower edge of the door and inwardly terminating spaced short of the rear face of the door, and being adapted to engage the rear side of the case flange adjacent the opening therein while the lower door edge engages the case to hang the door in the open position relative to the appliance.

4. A portable electric cooking appliance according to claim **3**, wherein the door is removable from the case upon upward manipulation of the door and tongue to clear the latch surface from beyond the case flange opening of the appliance.

5. A portable electric cooking appliance, comprising a sheet metal case and a pair of insulating material end pedestals supporting the case, said case including main bottom and top panels, opposed end panels, and a rear panel all fixed to one another and defining an open front enclosure; an electric heating element supported in the enclosure in spaced adjacent relationship to one of the main panels and being electrically insulated from the case; the case including a front panel across the lower extent of the enclosure opening and a retainer panel inclined between the bottom panel and the front panel and facing the heating element; the front panel, the retainer panel, the bottom panel and the rear panel being formed from a continuous single piece of sheet metal folded to shape and having rounded corners junctures between adjacent panels.

6. A portable electric cooking appliance according to claim **5**, wherein the electric heating element actually is formed by two separate elements that have corresponding ends that extend through openings in one of the end panels, wherein an electrically conductive rigid bus bar is mechanically and electrically connected to the two separate elements across the corresponding ends, and wherein insulator means mechanically secures the bus bar relative to the one end panel, operable to help hold the two separate elements in place within the appliance and also electrically connect them together.

7. A portable electric cooking appliance according to claim **6**, wherein the opposite ends of the two separate elements extend through openings in the other end panel, and wherein said bus bar connection for the two separate elements and the relatively snug fit of the elements within the end panel openings provide the sole means of support of the two separate elements in the case.

8. A portable electric cooking appliance, comprising a sheet metal case having main bottom and top panels, opposed end panels, and a rear panel all fixed relative to one another and defining an open front enclosure; bottom and side front case flanges formed as part of the case and defining the bottom and opposite side extents, respectively, of the enclosure opening and each side front case flange having an opening therein slightly above the level of the bottom case flange, a door removably supported relative to the case to close the open front of the enclosure, said door including a pair of spaced

tongues downwardly and rearwardly projecting from the rear face of the door and adapted to fit within the side flange openings, each tongue having a latch surface spaced below and facing the lower edge of the door and inwardly terminating spaced short of the rear face of the door, and being adapted to engage the rear side of the side flange adjacent the opening therein while the lower door edge engages the bottom case flange to hang the door in the open position relative to the appliance, said door being removable from the case upon upward manipulation of the door and tongues to clear the latch surfaces from the rear side of the case side flanges and removal through the openings therein; and an electric heating element supported in the enclosure in spaced adjacent relationship to one main panel and being electrically insulated from the case.

9. A portable electric cooking appliance according to claim **8**, further providing the door has a glass window therein closing an opening in the door, a lower rear flange on the door holding one edge of the glass, a bracket having a rear flange holding the opposite edge of the glass, the interconnecting edges of the glass extending beyond the periphery of the door opening and overlapping the rear face of the door, a handle on the front face of the door opposite the bracket, and common connecting means holding the bracket and handle to the door.