US00D834253S

(12) United States Design Patent

Khubani et al.

(10) Patent No.: US D834,253 S
(45) Date of Patent: ** Nov. 20, 2018

(54) **SHAVING DEVICE**

(71) Applicants: **Anand Khubani**, Morristown, NJ (US); **David Stowers**, Morristown, NJ (US)

(72) Inventors: **Anand Khubani**, Morristown, NJ (US); **David Stowers**, Morristown, NJ (US)

(73) Assignee: **IdeaVillage Products Corporation**, Wayne, NJ (US)

(**) Term: **15 Years**

(21) Appl. No.: **29/620,946**

(22) Filed: **Sep. 1, 2017**

(51) **LOC (11) Cl.** **28-03**

(52) **U.S. Cl.**
USPC **D28/50**

(58) **Field of Classification Search**
USPC D28/45–54
CPC B26B 19/14; B26B 19/141; B26B 19/143; B26B 19/145; B26B 19/146; B26B 19/148; B26B 19/16; B26B 19/18
See application file for complete search history.

(56) **References Cited**

U.S. PATENT DOCUMENTS

3,116,551	A *	1/1964	Anton	B26B 19/141 30/346.51
D255,166	S *	5/1980	Ayukawa	D28/50
D279,930	S *	7/1985	George	D28/48
D424,746	S *	5/2000	Lee	D28/50
6,502,309	B2 *	1/2003	De Vries	B26B 19/141 30/34.2
D503,495	S *	3/2005	Maeda	D28/53
D634,067	S *	3/2011	Stowers	D28/53
D634,068	S *	3/2011	Stowers	D28/53
D637,759	S *	5/2011	Byun	D28/50
D652,990	S *	1/2012	Strickland	D28/46
D673,325	S *	12/2012	Martines	D28/4
D674,144	S *	1/2013	Yamamoto	D28/46
D674,558	S *	1/2013	Ino	D28/53
D675,377	S *	1/2013	Boulanger	D28/46
D675,778	S *	2/2013	Vetu	D28/50
D675,779	S *	2/2013	Vetu	D28/50
D695,962	S *	12/2013	Prat-Pfister	D28/50
D696,461	S *	12/2013	Prat-Pfister	D28/53
D698,491	S *	1/2014	Ellison	D28/50

(Continued)

OTHER PUBLICATIONS

www.freakinreviews.com Finishing Touch Flawless Review, 2 pages, downloaded May 29, 2018, posted on Mar. 8, 2017.*

Primary Examiner — Jennifer Rivard
(74) *Attorney, Agent, or Firm* — Dan DeLaRosa

(57) **CLAIM**

We claim the ornamental design for a shaving device, as shown and described.

DESCRIPTION

FIG. **1** is a front perspective view of a shaving device shown with the cap of the present invention showing my new design;
FIG. **2** is a front side elevation view thereof;
FIG. **3** is a back side elevation view thereof;
FIG. **4** is a side elevation view thereof;
FIG. **5** is another side elevation view thereof;
FIG. **6** is a top plan view thereof;
FIG. **7** is a bottom plan view thereof;
FIG. **8** is a perspective view of the shaving device shown without the cap;
FIG. **9** is a front side view of FIG. **8**;
FIG. **10** is a back side view of FIG. **8**;
FIG. **11** is a side view of FIG. **8**;
FIG. **12** is another side view of FIG. **8**;
FIG. **13** is a top plan view of FIG. **8**; and,
FIG. **14** is a bottom plan view of FIG. **8**.
The shaving device is shown with and without the cap for convenience of illustration.

1 Claim, 8 Drawing Sheets

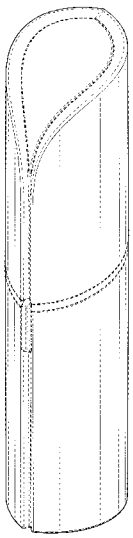

(56) **References Cited**

U.S. PATENT DOCUMENTS

D701,346	S *	3/2014	Hefetz	D28/89
D728,159	S *	4/2015	Szymanski	D28/49
D758,015	S *	5/2016	Prat-Pfister	D28/50
D758,017	S *	5/2016	Smith	D28/50
D758,664	S *	6/2016	Van Maanen	D28/51
D777,375	S *	1/2017	Frankel	D28/50
D785,871	S *	5/2017	Staab	D28/89
D797,377	S *	9/2017	Reggiani	D28/89
D812,301	S *	3/2018	Yan	D28/50
D818,646	S *	5/2018	Szymanski	D28/51
2010/0095531	A1 *	4/2010	Akkerman	B21D 53/64 30/43.6
2018/0071927	A1 *	3/2018	Kleine Doepke	B26B 19/143

* cited by examiner

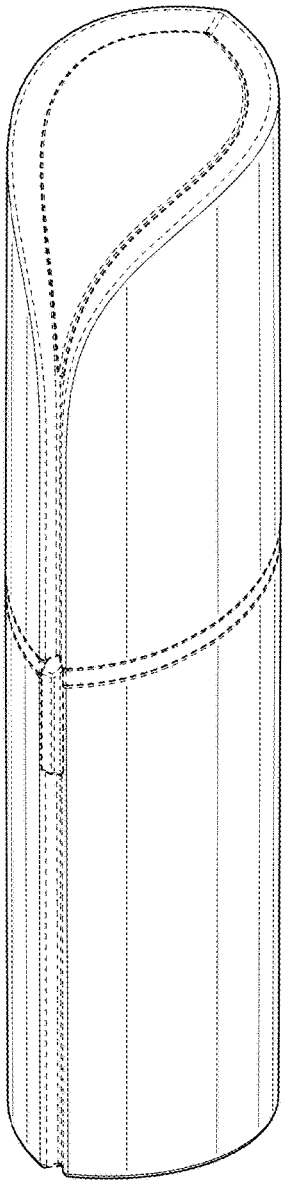

FIG. 1

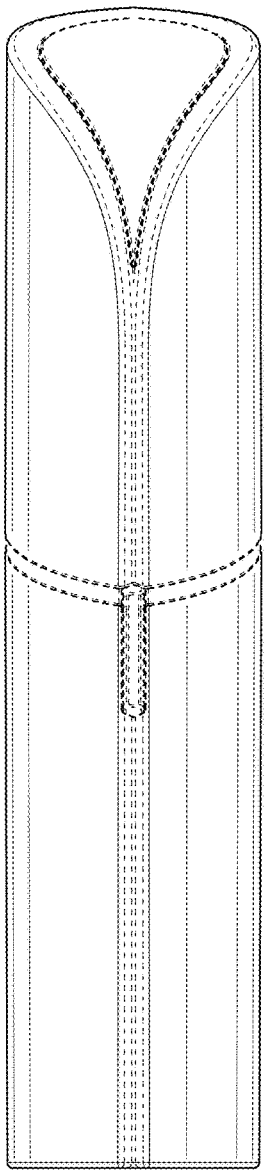

FIG. 2

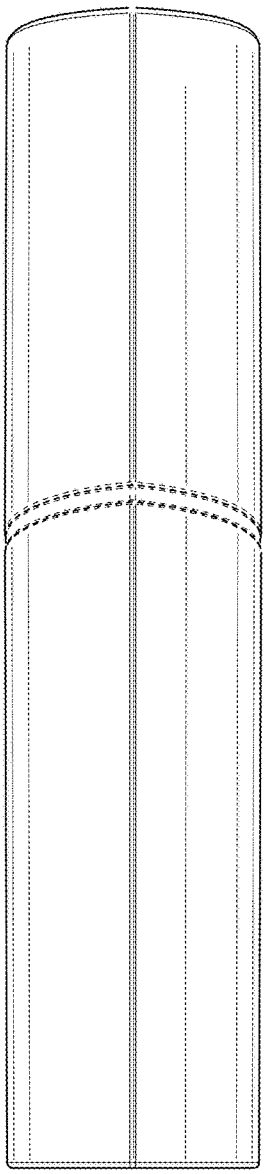

FIG. 3

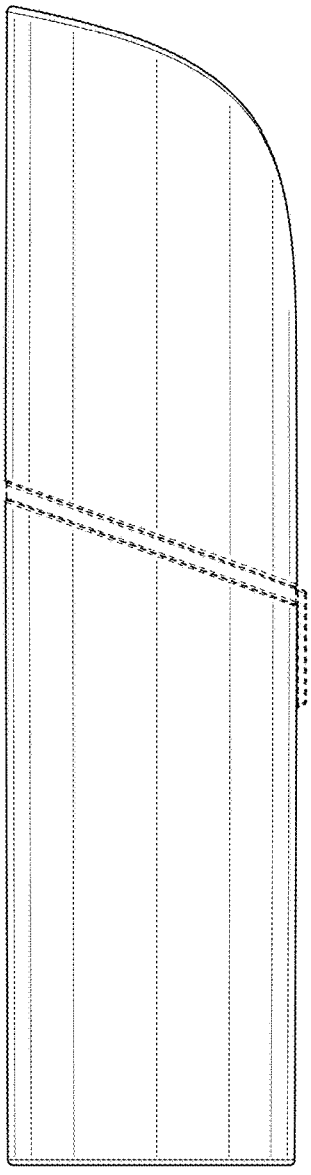

FIG. 4

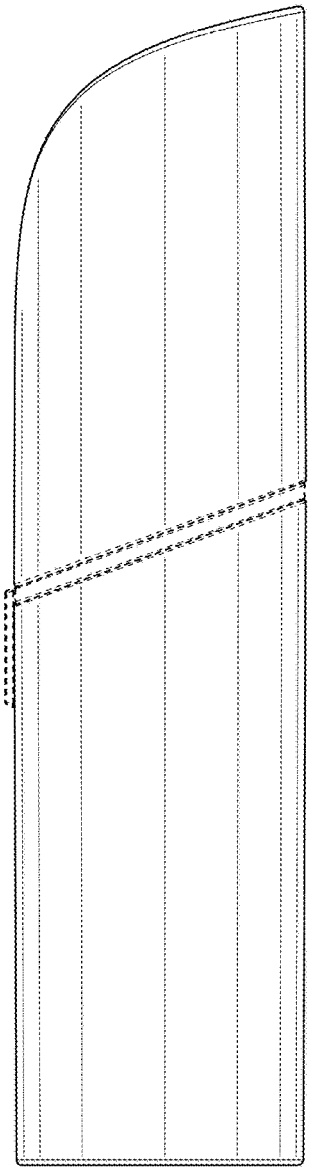

FIG. 5

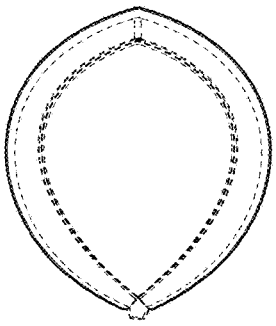

FIG. 6

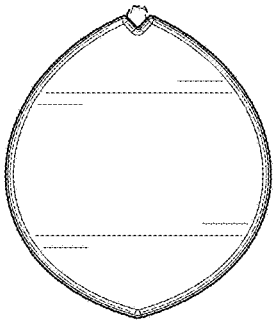

FIG. 7

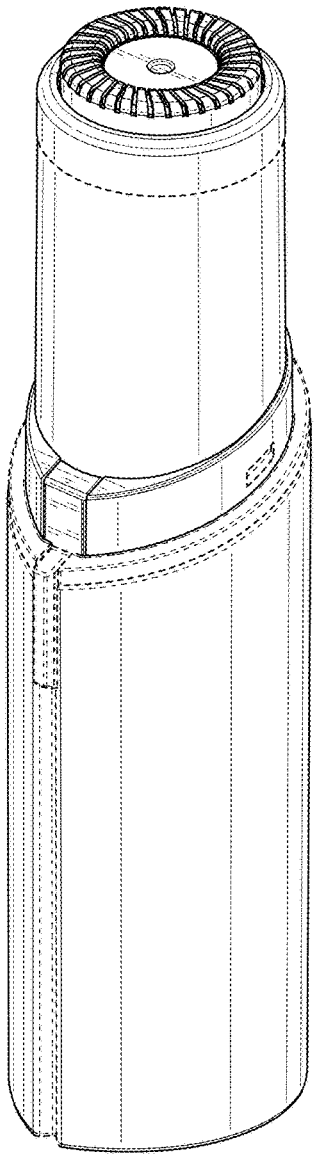

FIG. 8

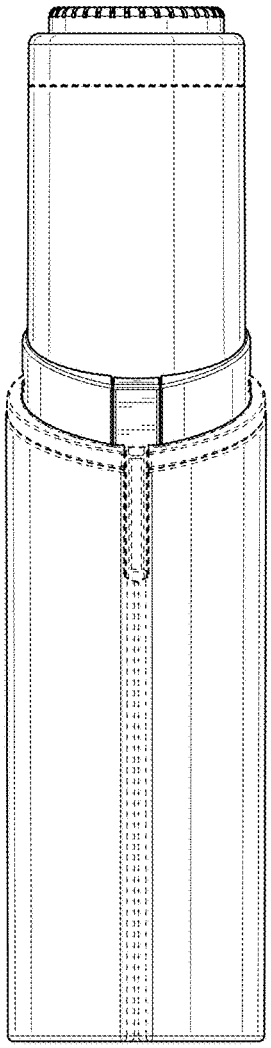

FIG. 9

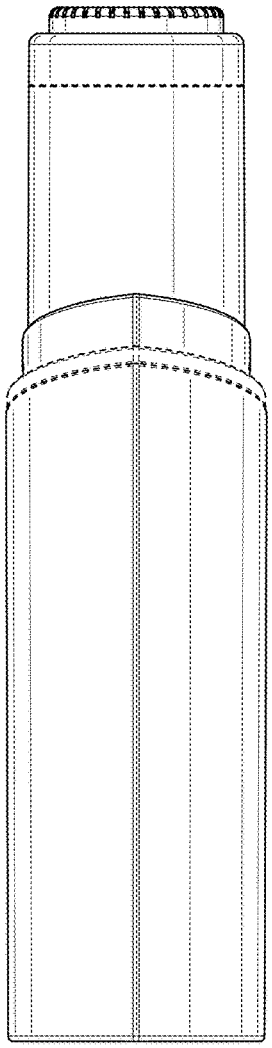

FIG. 10

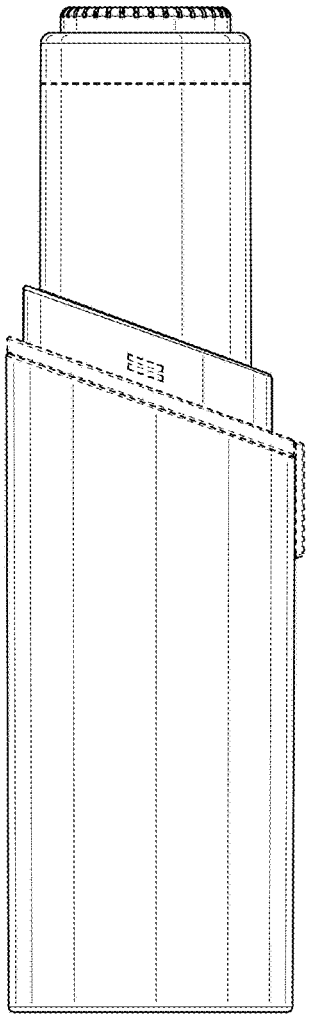

FIG. 11

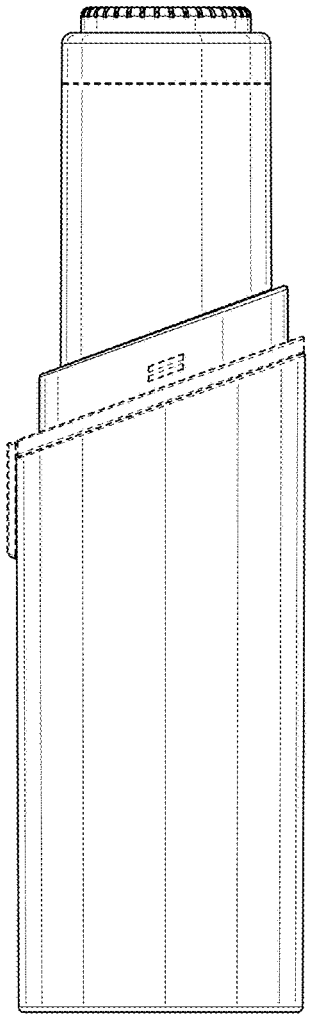

FIG. 12

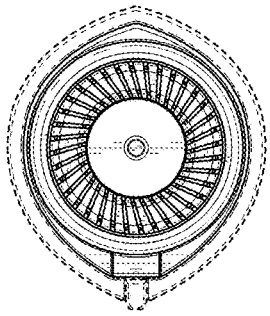

FIG. 13

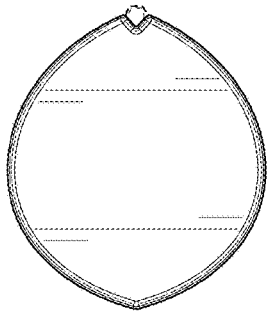

FIG. 14