J. W. OFFUTT.

METHOD OF MAKING SEAMLESS TUBES.

APPLICATION FILED SEPT. 28, 1910.

1,040,569.

Patented Oct. 8, 1912

2 SHEETS—SHEET 1.

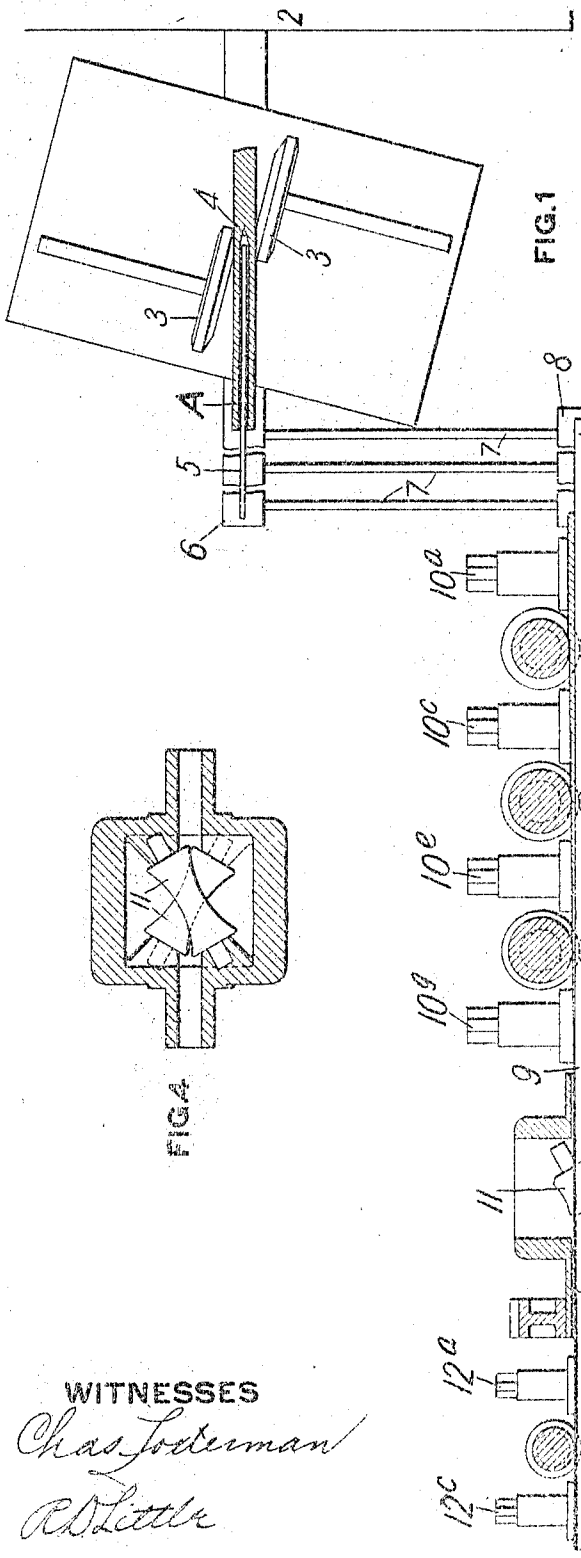

FIG. 1

FIG. 4

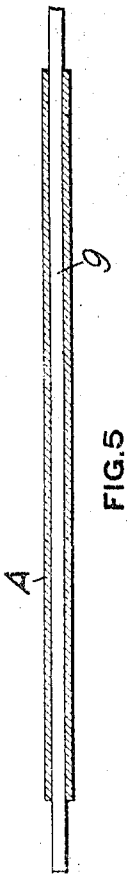

FIG. 5

WITNESSES

Chas. Foderman

R. D. Little

INVENTOR

J. W. Offutt

by Lothrop Betts & Fuller

his Attorneys

J. W. OFFUTT.

METHOD OF MAKING SEAMLESS TUBES.

APPLICATION FILED SEPT. 28, 1910.

1,040,569.

Patented Oct. 8, 1912.

2 SHEETS—SHEET 2.

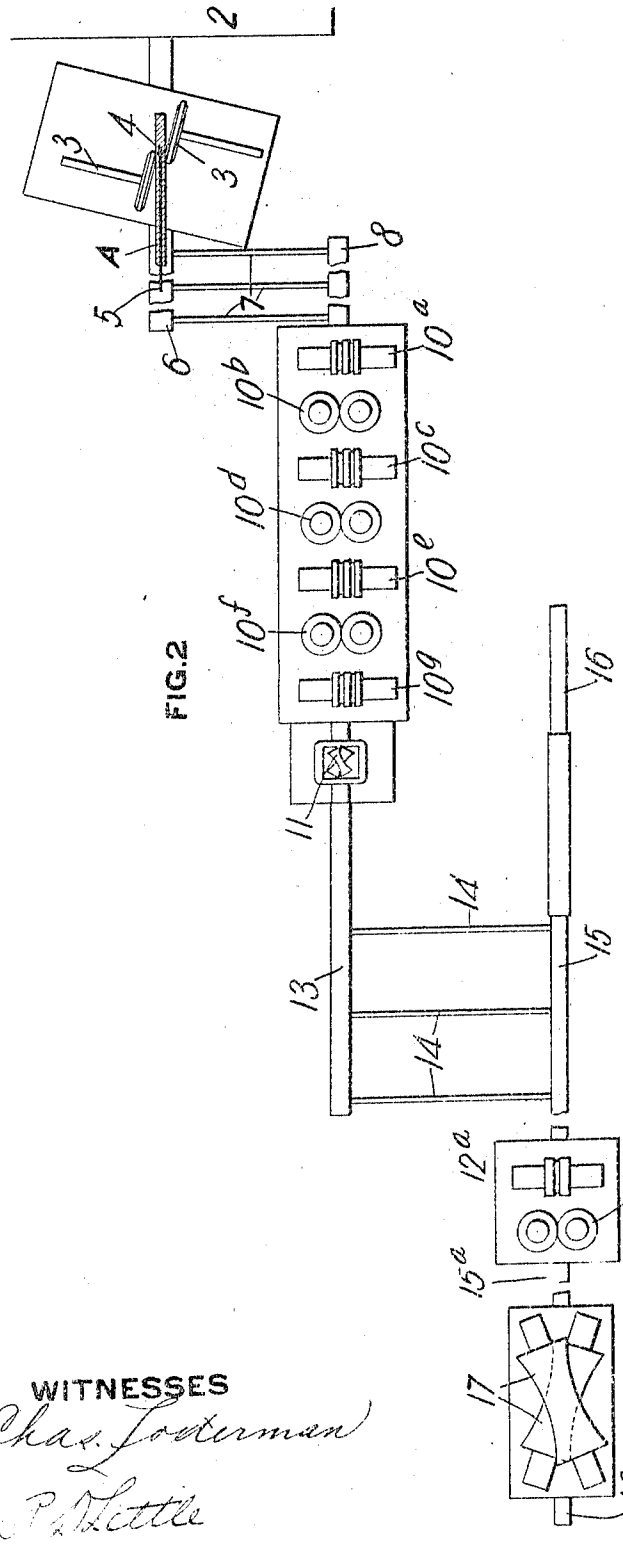

FIG.2

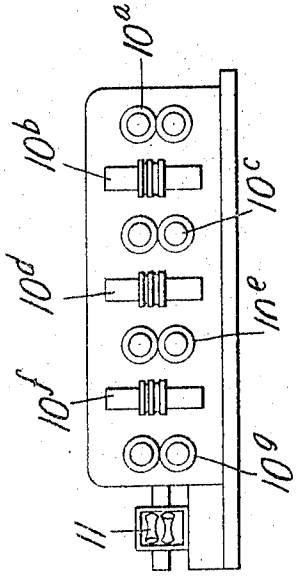

FIG.3.

WITNESSES

Chas. Loderman

P. D. Little

INVENTOR

J. W. Offutt

by Linthicum Beck & Fuller

his Attorneys

UNITED STATES PATENT OFFICE.

JOHN W. OFFUTT, OF ELLWOOD CITY, PENNSYLVANIA, ASSIGNOR TO THE SHELBY STEEL TUBE COMPANY, OF PITTSBURGH, PENNSYLVANIA, A CORPORATION OF NEW JERSEY.

METHOD OF MAKING SEAMLESS TUBES.

1,040,569. Specification of Letters Patent. Patented Oct. 8, 1912.

Application filed September 28, 1910. Serial No. 584,339.

To all whom it may concern:

Be it known that I, JOHN W. OFFUTT, of Ellwood City, in the county of Lawrence and State of Pennsylvania, have invented a new and useful Method of Making Seamless Tubes, of which the following is a full, clear, and exact description, reference being had to the accompanying drawings, forming part of this specification.

My invention relates to the manufacture of seamless tubes and more particularly relates to the manufacture of hot finished tubes not necessarily requiring further cold rolling or drawing operations to complete the tubes.

Heretofore, in making seamless tubes, the billets after being pierced are lessened in diameter and wall thickness in the passes of a rolling mill by reducing the pierced billets over a plug. In the piercing operation and in reducing the billets by rolling over the plugs, which are held stationary in position in the passes formed between the rolls of the rolling mill by means of suitable rods or mandrels, the surface of the pierced billet or tube is rough and irregular, the inner surface of the hollow tube being scratched and roughened to such an extent that the product is not salable until after further finishing operations. Owing to the construction of the reeling rolls employed in carrying out the reeling operations, the tube is rotated about its longitudinal axis by the reeling operation. In the reeling mechanism shown, while the reeling rolls and the frame in which the reeling rolls are supported rotate around the longitudinal axis of the tube, the frictional resistance of the roll bearings and of the contacting surfaces of the rolls and the tube causes the tube and its mandrel to rotate with the frame of the reeling mechanism unless means are provided for holding and preventing such rotation of the tube and the surface defects in the rolled tubes are not removed by the action of the reeling rolls. In addition to these defects, the tubes are not formed true to gage or wall thickness, nor are they of the desired round or circular cross section, a cold drawing operation being necessary to finish such tubes.

One object of my invention is to provide an improved method of making seamless tubes in which the pierced tubes are automatically held and prevented from rotating about their longitudinal axis during the successive forming operations, and surface defects removed from the tubes thereby.

Another object of the invention is to provide an improved method of making seamless tubes in which defects upon the inner and outer surfaces of the tubes are eliminated and by which the tubes are completed to gage or wall thickness and circular in cross section without cold drawing.

A further object of this invention is to provide an improved method of making such tubes by which tubes of the desired size and gage are produced without grooves or scratches or other surface defects heretofore present in tubes as made by existing methods and a hot finished seamless tube is made which is round or cylindrical and which does not necessarily require further cold drawing operations in order to be a marketable product.

A still further object of my invention is to provide a method of making seamless tubes in which heated, pierced billets are placed upon a mandrel and are then subjected, in a series of continuous steps, to rolling, reeling and sizing operations arranged to permit of the easy withdrawal of the mandrel after the sizing operations and to provide a method of forming such tubes permitting the use of a mandrel shorter than the finished tube.

In the accompanying drawings, Figure 1 is a sectional plan showing the preferred construction and arrangement of apparatus for use in carrying out my improved method of forming pierced billets into tubes. Fig. 2 is a diagrammatic plan showing another arrangement of apparatus constructed and adapted for use in carrying out my improved method. Fig. 3 is a sectional side elevation of the rolling mill and the reeling rolls forming part of the apparatus shown in Fig. 2. Fig. 4 is a detail longitudinal section showing, on a larger scale, the reeling mechanism of Figs. 1 and 2. Fig. 5 is a longitudinal plan, the billet being shown in longitudinal section, showing the pierced billet or partly formed tube in position on the mandrel as arranged during the rolling and reeling operations forming part of this method.

In the drawings, 2 designates a heating furnace in which the billets or blanks are heated, and 3, 3, are the rolls of a piercing mill which is located conveniently in front

of the exit or discharge opening in the heating furnace. A plug 4 for forming the opening or hole in the billet, is detachably secured to one end of the mandrel or bar 5 by which the plug is held in position between the rolls 3 of the piercing mill in piercing the billet or blank to form the annular blanks.

The billet after being pierced to form a tubular blank is discharged endwise upon the trough or conveyer 6 located in front of the rolls of the piercing mill. When the piercing operation is completed and the blank A is delivered upon the conveyer 6, the mandrel 5 is still within the pierced billet or blank. The mandrel is then removed from the opening within the tubular blank and the blank is transferred sidewise or transversely of its length upon the skids 7 forming the conveyer extending from the trough or conveyer 6 to the trough or conveyer 8 which is located in line with and in front of the entering end of the continuous rolling mill forming part of the tube making apparatus. After the partly formed tube or tubular blank A is in position on the trough or conveyer 8 a mandrel 9 whose length preferably is greater than that of the tubular blank is inserted within the opening in the blank with its ends projecting beyond the ends of the blank, as shown in Fig. 5. The mandrels 9 are circular in cross section and preferably slightly smaller in diameter than the opening formed in the billets by the piercing operation.

The blank A with the mandrel in place is then passed endwise into the bite of the first set of rolls 10^a of the continuous rolling mill and is fed forwardly so as to be engaged successively by the series of sets of rolls, 10^b, 10^c, 10^d, 10^e, 10^f, and 10^g of this mill, finally emerging from between the final set of rolls 10^g in an elongated condition, with its wall thickness very greatly reduced and its outer diameter lessened.

Located as closely as practicable to the last stand of rolls 10^g of the rolling mill are the reeling rolls 11, 11, forming the reeling mechanism preferably employed in carrying out my improved method. The annular blanks which have been pressed into very tight engagement with the mandrels 9, upon issuing from the last stand of rolls 10^g, pass immediately into the reeling machine in which the blanks are reduced slightly in wall thickness and the bore of the tube or tubular blank is increased sufficiently to loosen and permit of the ready removal of the mandrel. The reeling rolls also remove any unevenness of gage and form the tube to a truly circular cross section and impart a smooth finished surface to the rolled tube. As shown in Fig. 1 the tube with the loosened mandrel is then fed directly into the sizing rolls 12^a, 12^b, and 12^c, by which the rolled and reeled tube is reduced to the desired diameter, without altering its circular form.

As shown in Fig. 1, the sizing rolls 12^a, 12^b, 12^c, are located as closely to the reeling mechanism as may be, and, by reference to Fig. 1, it will be seen that the tube with its mandrel is between the rolls of the rolling mill, the reeling rolls and the sizing rolls, at the same time, and that the tube is in the grip of the rolls of either the rolling mill or the sizing rolls at all times any portion of the tube is between the rolling reels 11. In this way the rotation of the billet or blank during the forming operations is prevented, the rolls of the rolling mill gripping and preventing such rotation at the beginning of the reeling operation and the sizing rolls holding the blank after its rear end has emerged from the rolls of the rolling mill.

In the apparatus shown in Fig. 2 the heating furnace 2, piercing mill, rolling mill and reeling mechanism are located and arranged in the same manner as shown in Fig. 1. A trough or conveyer 13 is located in line with and on the discharge side of the reeling mechanism in Fig. 2 upon which the reeled tubes and mandrels are delivered from the reeling mechanism. The tubes with the mandrels still within the bore of the tubes are transferred sidewise on the skids 14, which connect the conveyer 13 with a conveyer 15 which is in line with and in front of the sizing rolls 12^a, 12^b. It will be noted that in Fig. 1 three stands of sizing rolls are shown, two of which are horizontal and one vertical, while in Fig. 2 two stands of such rolls are shown, one horizontal and the other vertical. In this arrangement proper provision is thereby afforded for holding the tube on its bar or mandrel to prevent its rotation after the tube leaves the last roll pass of the rolling mill and while the tube is still in the grip of the reeling rolls.

The mandrel 9 is removed from the tube A while upon the conveyer 15, a suitable draw bench 16 being provided for that purpose. The tube on the conveyer 15, after the removal of the mandrel, is then passed through the sizing rolls 12^a, 12^b, and is reduced to the desired diameter therein, passing from the sizing rolls to a conveyer 15^a which is in line with and connects the sizing rolls with the cross rolls 17 by which the tubes are straightened, the straightened tubes then being delivered on the conveyer 18 to a cooling bed or other place of disposal, (not shown).

In the apparatus shown in Fig. 1 the tubes are delivered from the last stand of sizing rolls 12^c into cross straightening rolls similar to those shown in Fig. 2 and in a similar location relative to the sizing rolls either before or after the mandrels are removed. After the removal of the mandrels the tubes are delivered from the straighten-

ing rolls to the cooling bed or other place of storage in the same manner as described, using the apparatus of Fig. 2.

In making tubes by my improved method, the billets, preferably after being centered, are placed within the heating furnace 2 to be heated to the desired temperature. The heated billets are successively removed from the furnace and are subjected to a piercing operation between the rolls 3, 3, of the piercing mill, the plug 4 being held in position between the rolls during the piercing operation by the rod or mandrel 5. The billets are caused to travel lengthwise during the piercing operation by the action of the piercing rolls 3, 3, and finally are delivered upon the conveyer 6. The rod or mandrel is then removed from the pierced billet, the plug 4 having become detached from the end of this rod or mandrel 5 at the completion of the piercing operation, and the pierced billet, after the bar 5 is removed, is delivered sidewise across the ways or skids 7 to the conveyer 8. A cylindrical mandrel 9, preferably of greater length than the finished tube is then placed within the opening or hole in the pierced billet A, as shown in Fig. 5. The billet A on its mandrel is then fed forwardly between the first set of rolls 10^a of the rolling mill and passes between the rolls of the successive stands of horizontal and vertical rolls, 10^a; 10^b, 10^c, 10^d, 10^e, 10^f, 10^g, of the continuous rolling mill shown.

In the first stand of rolls 10^a the billet is forced tightly around the cylindrical mandrel 9 and is reduced somewhat in cross sectional area, and, in the later stands of rolls, the thickness of the wall and cross sectional area of the pierced billet or partly finished tube A is further reduced and the tube elongated.

The rolled, partly formed tube, together with its mandrel is then delivered forwardly into the bite of the reeling rolls 11, in which the tube is slightly reduced in wall thickness by the action of the reeling rolls and is made truly cylindrical giving the tube a finished surface. The tube A which has been pressed tightly into very close contact upon the mandrel 9 by the action of the rolls of the rolling mill, is increased in bore and the mandrel is loosened by this reeling operation sufficiently to permit of its easy removal after the reeling operation is completed.

As shown in Fig. 2, the tube and its mandrel are delivered from the reeling rolls 11 upon the conveyer 13 and are then transferred sidewise upon the skids or ways 14 to the conveyer 15. The mandrel 9 is then extracted from the rolled and reeled tube, power being applied when necessary by means of the mechanism of the extractor bench 16, to effect the removal of the mandrel and the tube is delivered lengthwise between the rolls of the sizing apparatus formed as shown by the horizontal rolls 12^a and vertical rolls 12^b, and is formed to the desired diameter. The sized tubes are then delivered lengthwise by the conveyer 15^a into the cross rolls 17 by which they are straightened and completed, and the finished tubes are then delivered upon the conveyer 18 leading from the cross rolls to a cooling bed or other place of disposal.

In using apparatus like that shown in Fig. 1 to carry out my improved method, the pierced billets A after being placed on a mandrel, are introduced into the rolls of the rolling mill, as before described. The wall thickness of the tube is reduced in the successive passes formed by these rolls and the tube is delivered therefrom into the reeling rolls. In this case the reeling rolls and the frame on which the rolls are mounted are constructed as shown in detail in Fig. 4, and the frame and rolls are rotated about the longitudinal axis of the blank and mandrel in the same manner as shown in Figs. 2 and 3. The rolled and reeled blank upon emerging from the reeling rolls enters the sizing rolls and a portion of the blank is sized while the mandrel is still within the blank. The blank then passes to the mandrel extractor bench where the mandrel is removed from the sized tube.

The reeling operation slightly increases the diameter of the opening or hole in the tube and loosens the tube which has been tightly rolled upon the mandrel by the rolling operation. While the passes in the sizing rolls slightly reduce the diameter of the tubes, these passes are so proportioned that the tube, although reduced in diameter in being sized, is not reduced sufficiently to be again closed tightly around the mandrel within the tube. The sized tube, after the mandrel is removed, then passes forwardly from the sizing rolls to cross rolls, in which it is straightened in the same manner as shown in Fig. 2 before described. The so finished tubes, after being cut to length, are in readiness for shipment unless it is desired to further reduce the tubes by a cold drawing process. Should such cold drawing step be necessary, the hot finished tubes are then pickled and are cold drawn on drawing benches, in the usual manner, which not forming part of my improved method need not be further described.

When a mandrel shorter than the finished tube is employed, instead of one which is of greater length than that of the finished tube, portions of the tube will have a longitudinal movement relative to the mandrel during the rolling and reeling operations.

The advantages of my invention will be apparent to those skilled in the art.

By using my improved method a hot

pierced billet or blank is finished at a single heat and in a series of continuous related steps into a finished seamless tube.

Modifications in the construction and arrangement of the apparatus for carrying out my method may be made without departing from my invention as defined in the appended claims. While preferably the heated blanks are pierced and then finished at the initial heat, prior to the piercing operation, obviously pierced billets may be heated and then subjected to the successive steps of my improved method as defined in the appended claims.

I claim:—

1. In the manufacture of seamless tubes the steps consisting in subjecting a heated tubular blank while on a mandrel successively and simultaneously to the action of the rolls of a rolling mill and a reeling machine to thereby form the tubes in a manner affording a continuous operation.

2. In the manufacture of seamless tubes the steps consisting in subjecting a heated tubular blank while on a mandrel successively and simultaneously to the action of the rolls of a rolling mill, a reeling machine and of sizing rolls to thereby form the tubes in a manner affording a continuous operation.

3. In the manufacture of seamless tubes the steps consisting in subjecting a heated tubular blank while on a mandrel successively to the action of the rolls of a rolling mill, a reeling machine and of sizing rolls, the action of the reeling and of the sizing rolls being simultaneous to thereby form the tubes in a manner affording a continuous operation.

In testimony whereof, I have hereunto set my hand.

JOHN W. OFFUTT.

Witnesses:
R. T. Brown,
Leslie H. Mann.