US00D430870S

United States Patent [19]

Maruyama et al.

[11] **Patent Number: Des. 430,870**

[45] **Date of Patent: ** Sep. 12, 2000**

[54] **COMPUTER**

[75] Inventors: **Yukinobu Maruyama**, Kokubunji; **Masayuki Kan**, Isehara, both of Japan; **Ernesto V. Quinteros**, Long Beach; **Chih-Yang Kao**, Fremont, both of Calif.

[73] Assignee: **Hitachi, Ltd.**, Tokyo, Japan

[**] Term: **14 Years**

[21] Appl. No.: **29/077,394**

[22] Filed: **Sep. 4, 1997**

[30] **Foreign Application Priority Data**

Jul. 4, 1997 [JP] Japan 9-60297

[51] **LOC (7) Cl.** **18-01**

[52] **U.S. Cl.** **D14/331**; D14/331; D14/338-340; D18/1; D18/2; D18/7; 345/104; 364/708.1; 361/680; 361/681

[58] **Field of Search** D14/338–340, D14/333–335, 331, 330, 337; D18/1, 2, 7; 345/104, 156, 168, 169; 364/708.1; 361/680, 681

[56] **References Cited**

U.S. PATENT DOCUMENTS

D. 303,789	10/1989	Brunner .	
D. 306,156	2/1990	Myers .	
D. 306,433	3/1990	Mitchell .	
D. 320,196	9/1991	Carter .	
D. 324,855	3/1992	Iino	D14/331
D. 340,037	10/1993	Yokota .	
D. 358,372	5/1995	Goodrich .	
D. 366,649	1/1996	Soderburg	D14/331
D. 369,147	4/1996	Iino .	
4,839,837	6/1989	Chang	361/681
4,901,261	2/1990	Fuhs	361/680
4,903,221	2/1990	Krenz	361/680

Primary Examiner—Freda Nunn

Attorney, Agent, or Firm—Antonelli, Terry, Stout & Kraus, LLP

[57] **CLAIM**

The ornamental design for a computer, as shown and described.

DESCRIPTION

FIG. **1** is a perspective front, right side and top view of a computer showing our new design;
FIG. **2** is a front elevatioanl view thereof;
FIG. **3** is a rear side view thereof;
FIG. **4** is a right side view thereof;
FIG. **5** is a left side view thereof
FIG. **6** is a top view thereof
FIG. **7** is a bottom view thereof; and,
FIG. **8** is a explanatory front, right side and top perspective view when a keyboard is separated from the main body thereof.

1 Claim, 6 Drawing Sheets

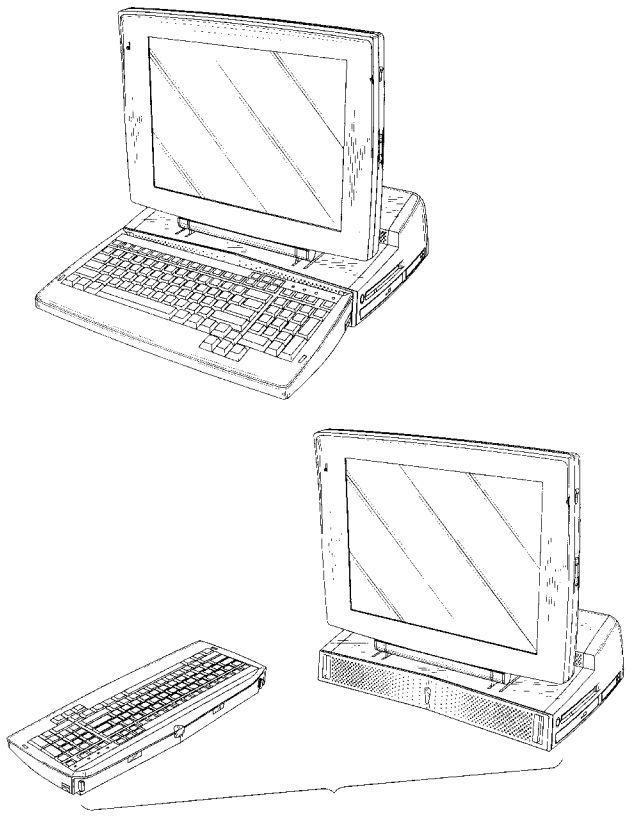

FIG. 1

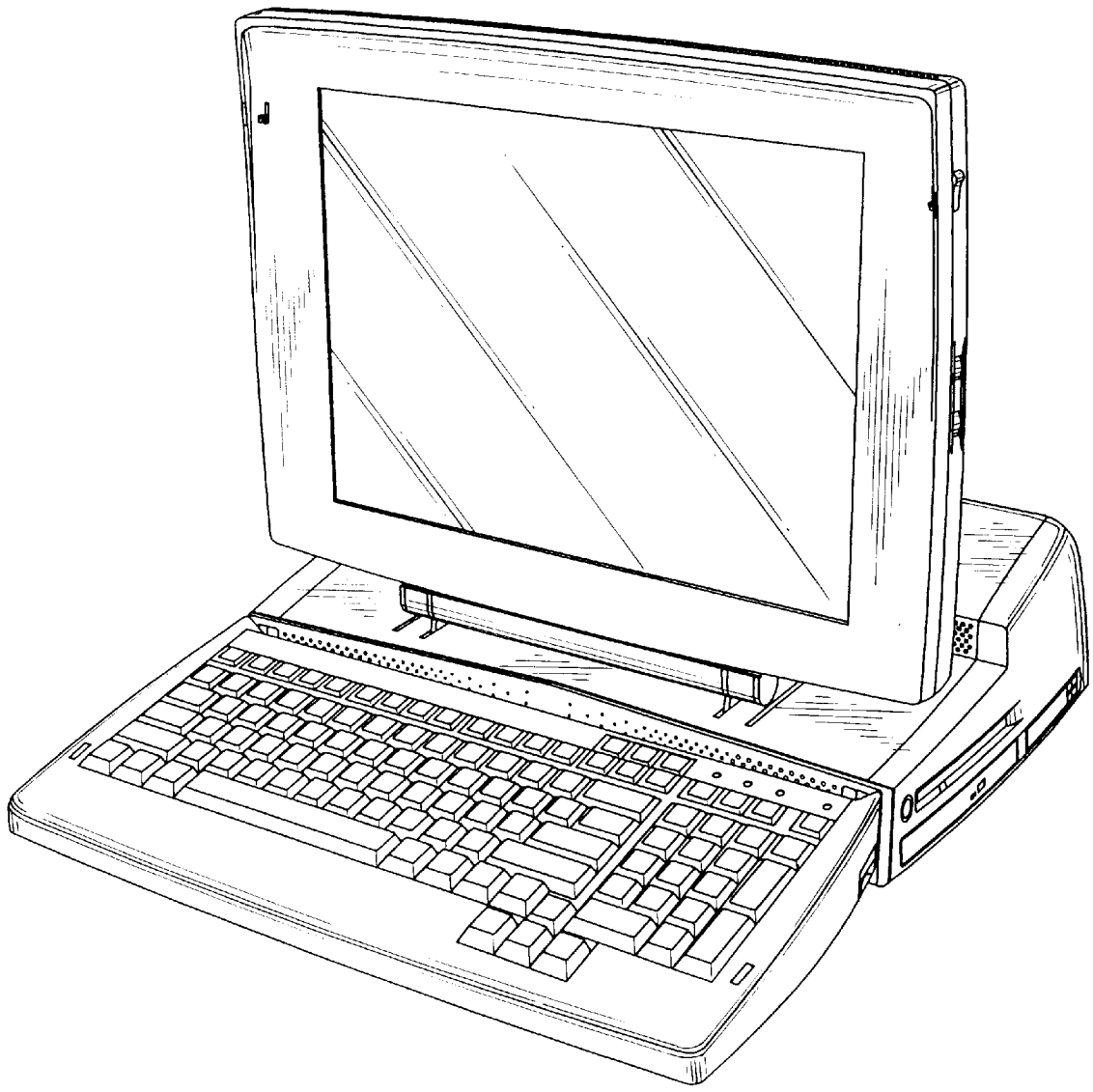

FIG. 2

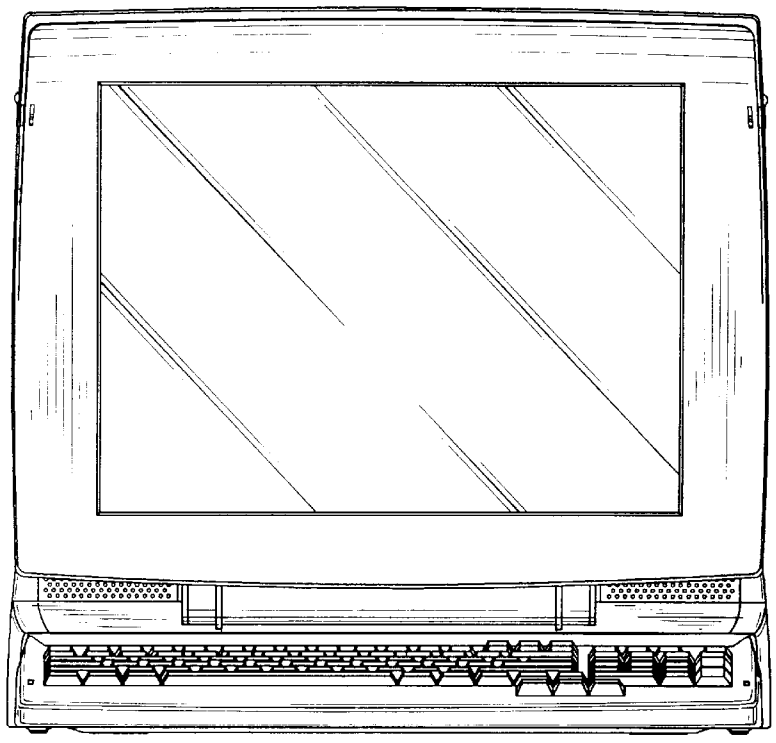

FIG. 3

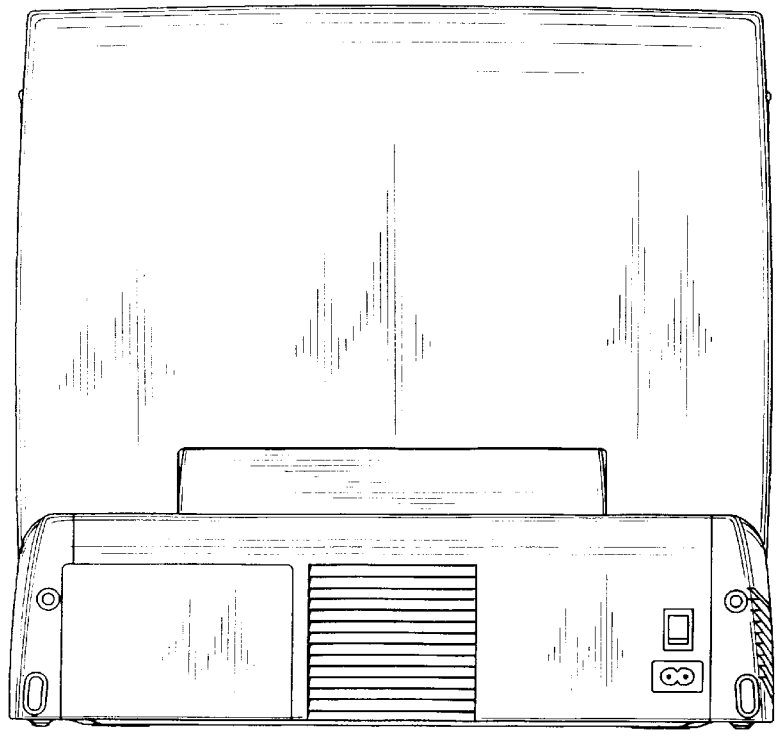

FIG. 4

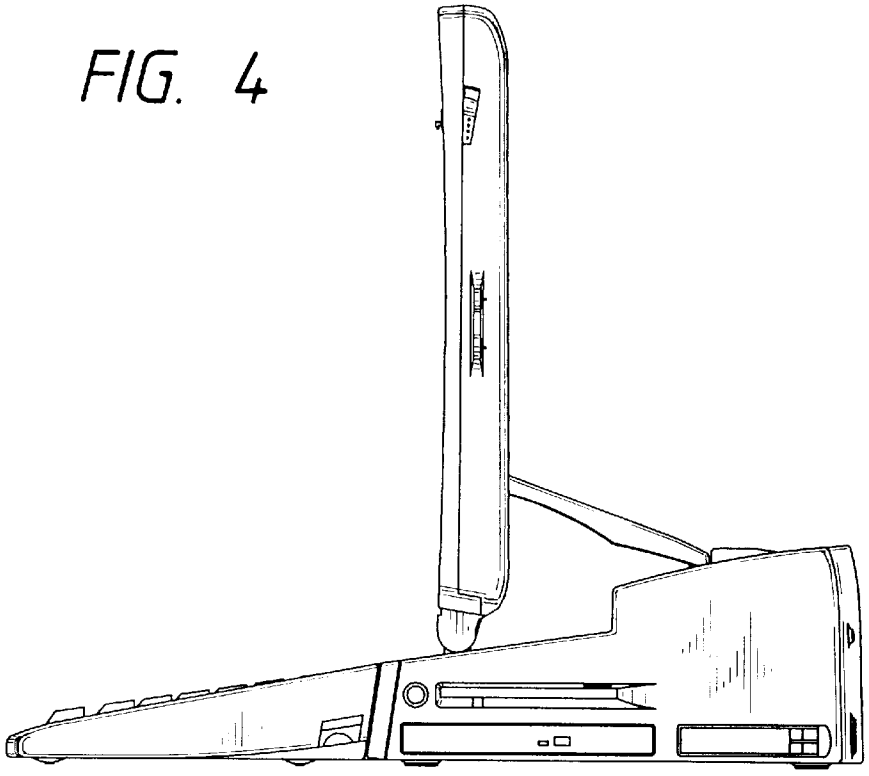

FIG. 5

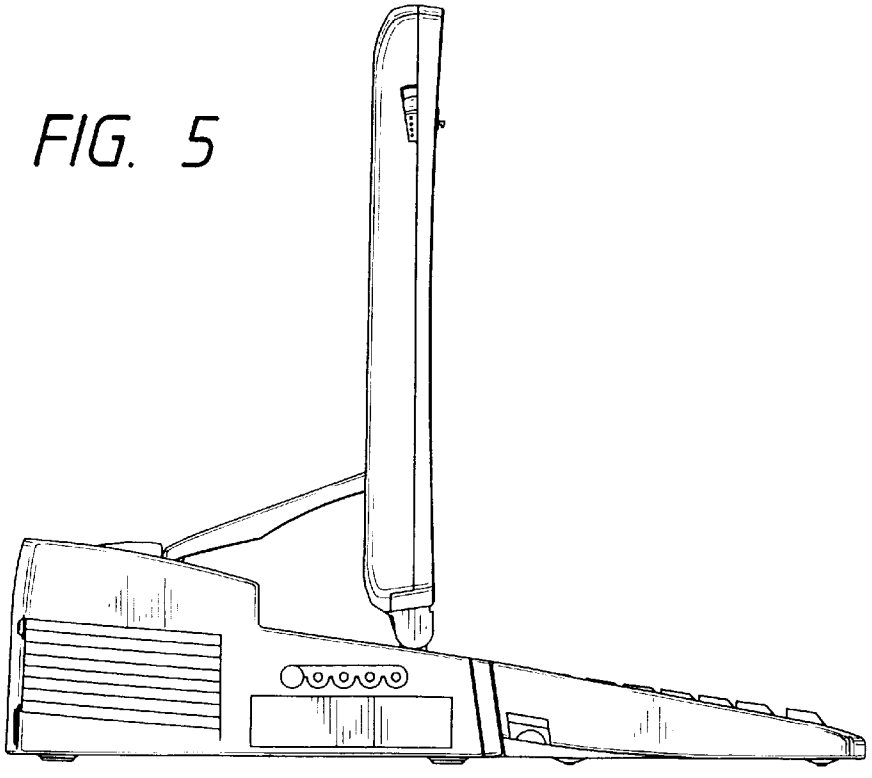

FIG. 6

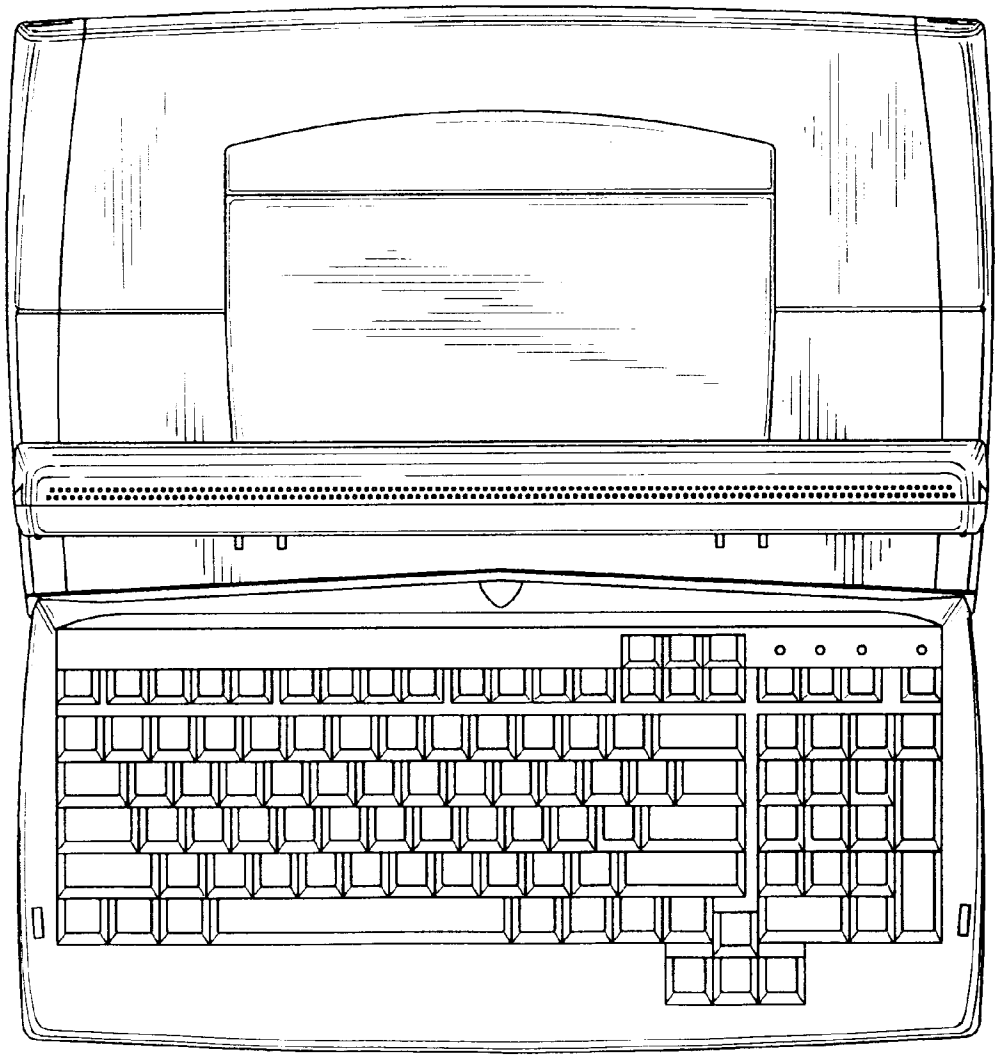

FIG. 7

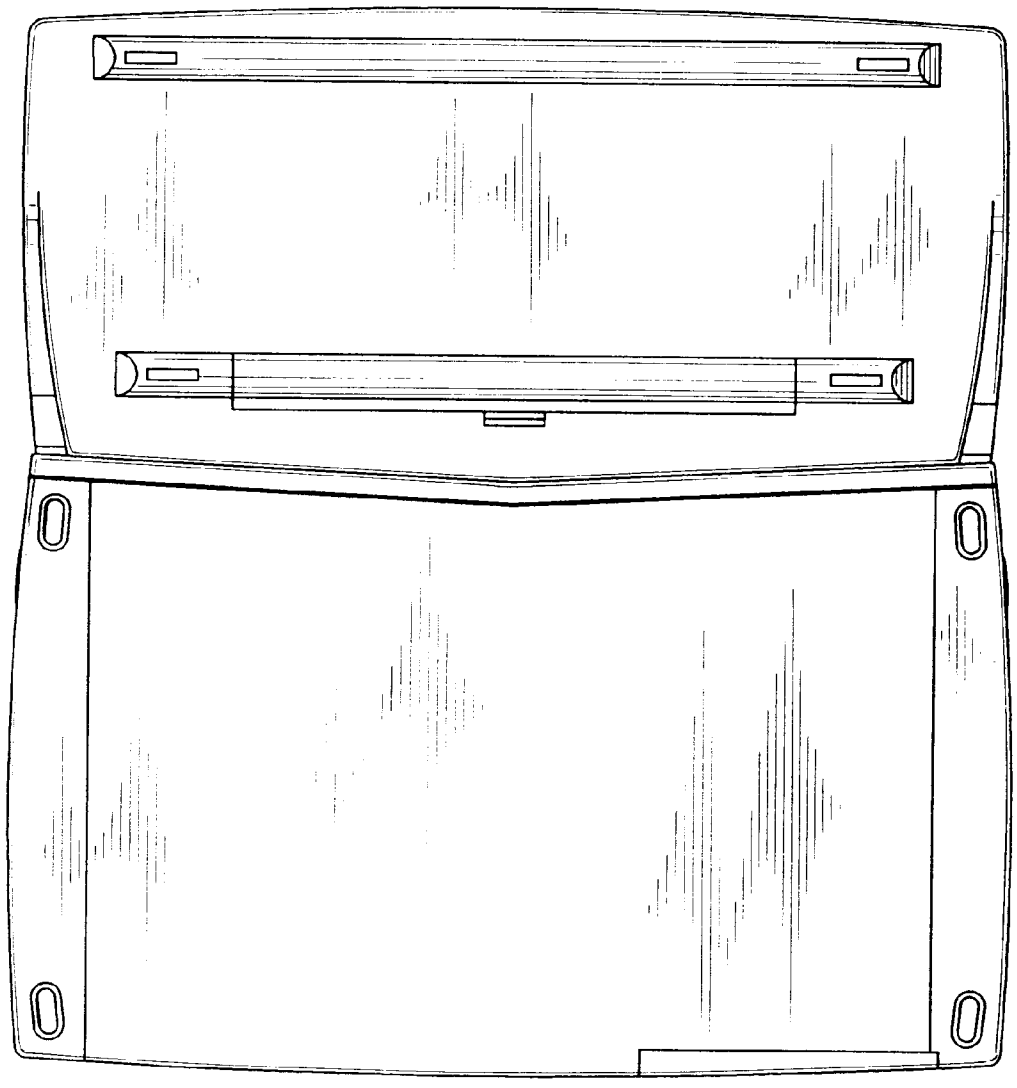

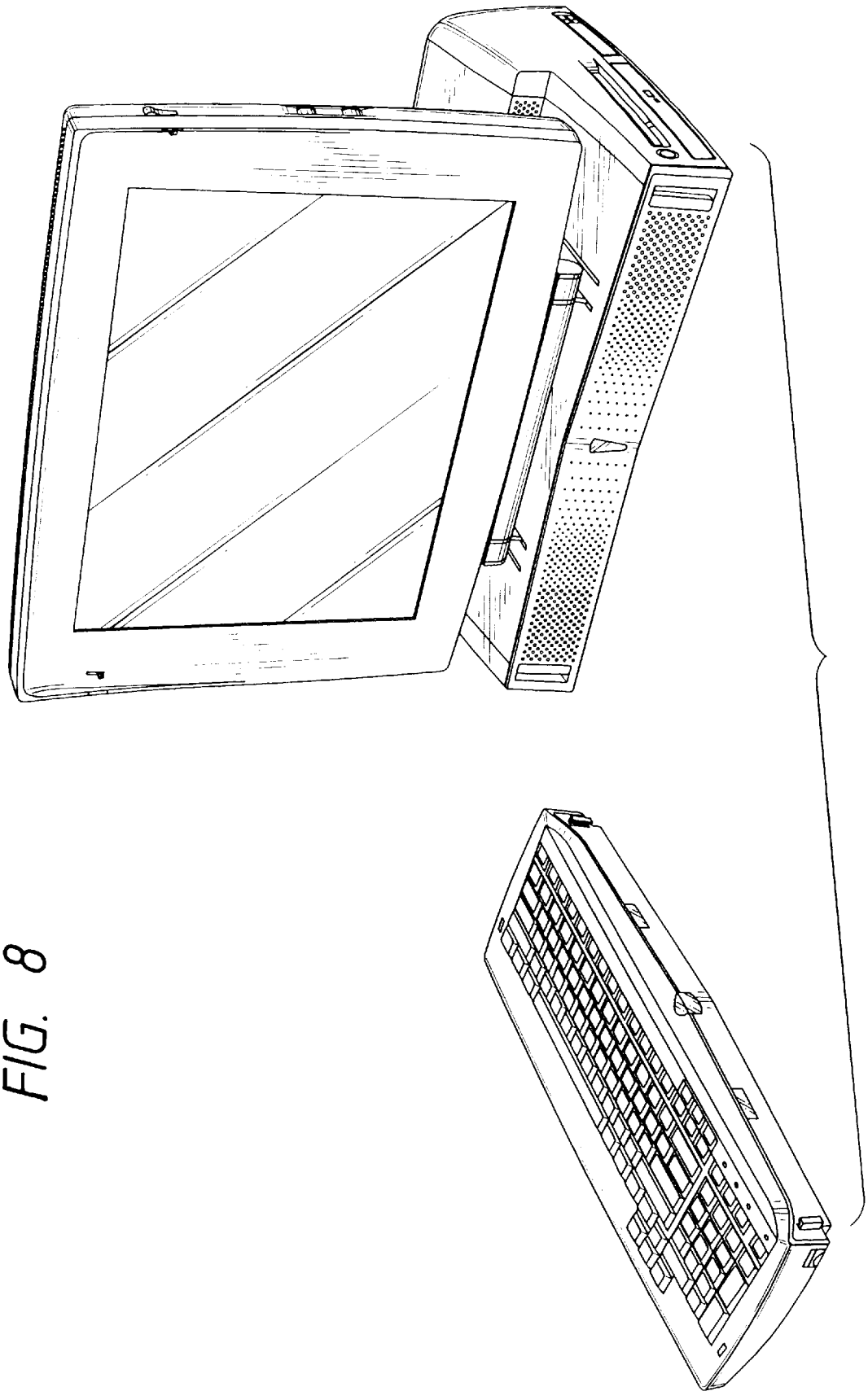

FIG. 8