No. 788,585. PATENTED MAY 2, 1905.

J. M. JOHNSON.

COIN COUNTER.

APPLICATION FILED SEPT. 22, 1902.

3 SHEETS—SHEET 1.

Fig. 1.

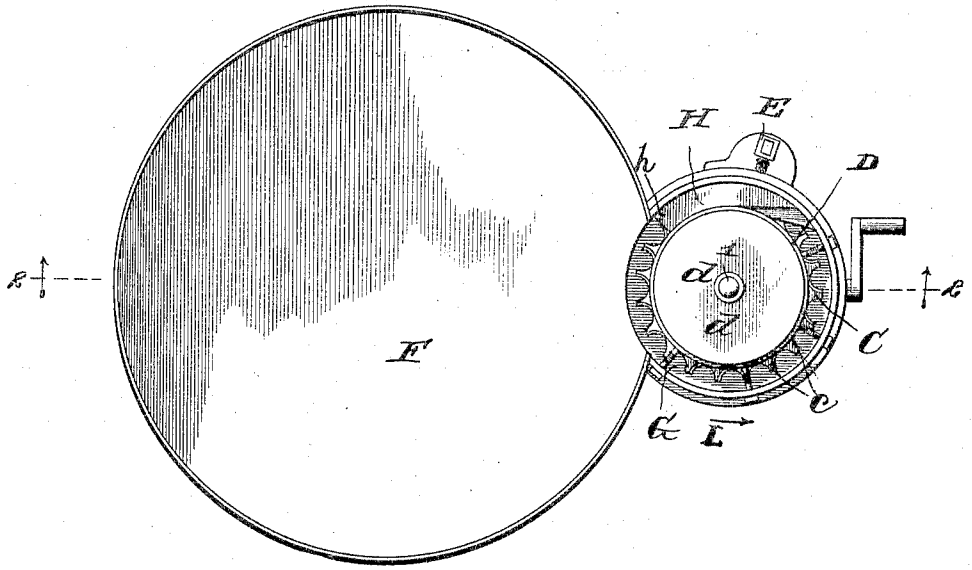

Fig. 2.

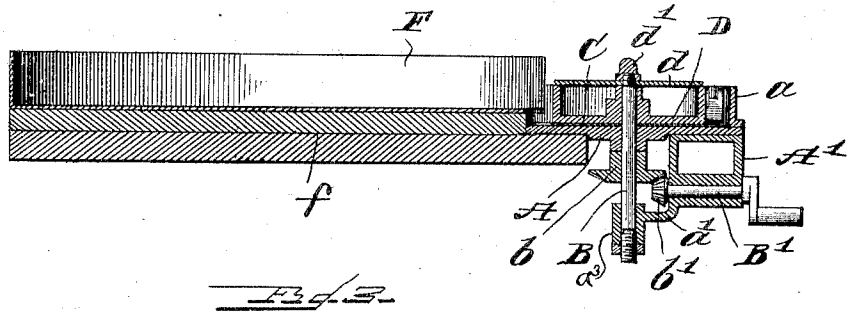

Fig. 3.

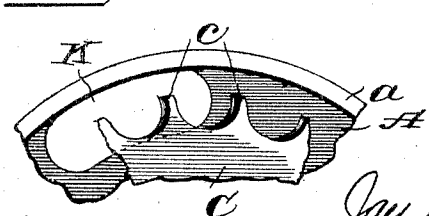

Witnesses.

G. A. Pauberschmidt.

Alfred C. Odell

Inventor.

Jay M. Johnson.

By Charles W. Hills Atty.

No. 788,585. PATENTED MAY 2, 1905.

J. M. JOHNSON.

COIN COUNTER.

APPLICATION FILED SEPT. 22, 1902.

3 SHEETS—SHEET 2.

Fig. 4.

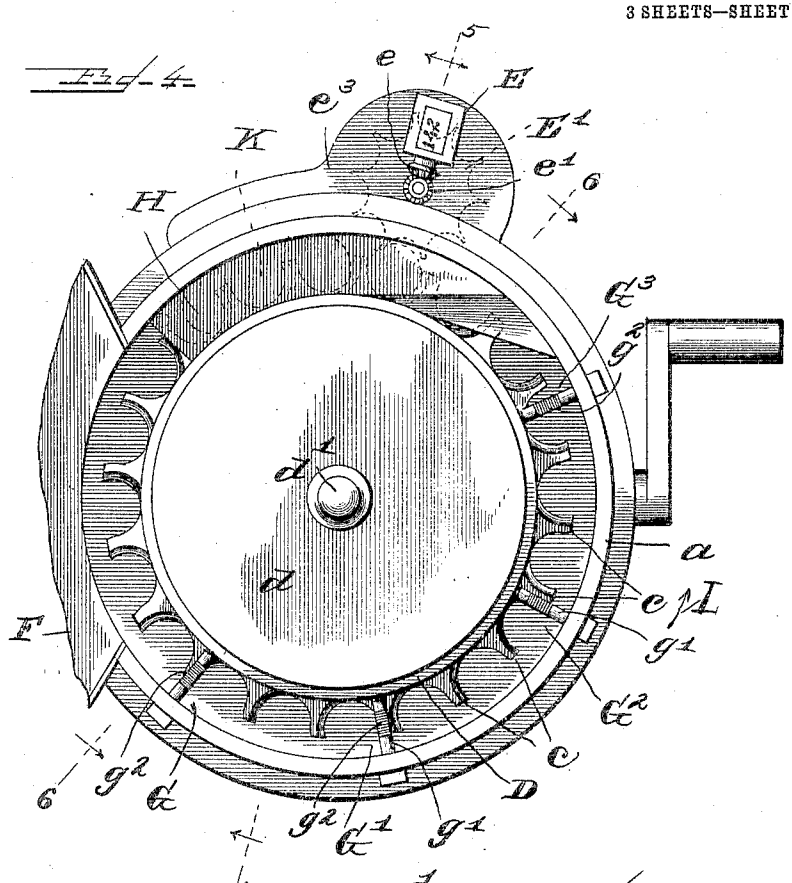

Fig. 5.

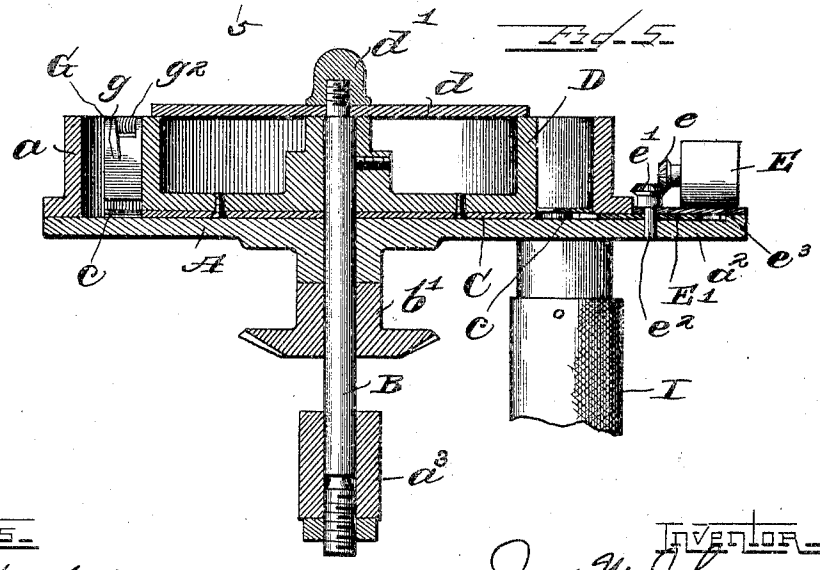

Witnesses.

G. A. Pauberschmidt

Alfred C. Odell

Inventor.

Jay M. Johnson

By Charles W. Hills Atty.

PHOTO-LITHOGRAPHED BY SACKETT & WILHELMS LITHO. & PTG. CO. NEW YORK

No. 788,585. PATENTED MAY 2, 1905.

J. M. JOHNSON.

COIN COUNTER.

APPLICATION FILED SEPT. 22, 1902.

3 SHEETS—SHEET 3.

Fig. 6.

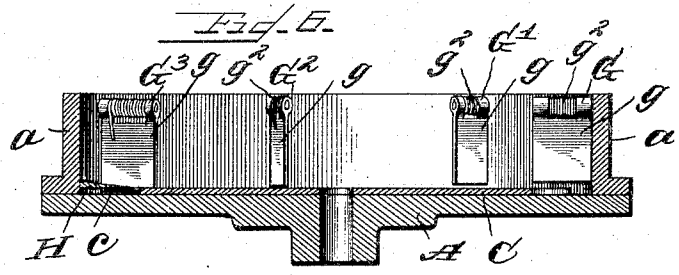

Fig. 7.

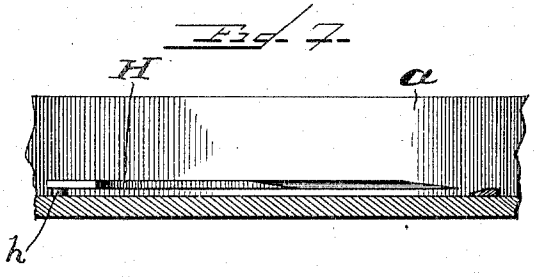

Fig. 8.



Fig. 9.

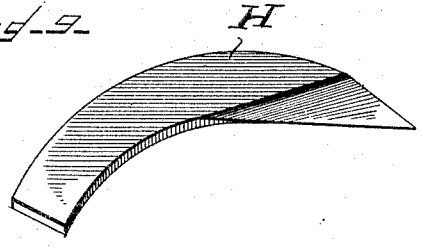

Fig. 10.

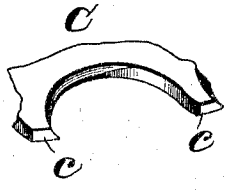

Witnesses.

G. A. Taubenschmidt

Alfred Bodell

Inventor.

Jay M. Johnson

By Charles A. Wiles Atty.

PHOTO LITHOGRAPHED BY SACKETT & WILHELMS LITHO. & PTG. CO. NEW YORK.

No. 788,585. Patented May 2, 1905.

UNITED STATES PATENT OFFICE.

JAY M. JOHNSON, OF CHICAGO, ILLINOIS, ASSIGNOR TO COIN COUNTING MACHINE COMPANY, A CORPORATION OF NEW YORK.

COIN-COUNTER.

SPECIFICATION forming part of Letters Patent No. 788,585, dated May 2, 1905.

Application filed September 22, 1902. Serial No. 124,284.

To all whom it may concern:

Be it known that I, JAY M. JOHNSON, a citizen of the United States, and a resident of the city of Chicago, in the county of Cook and State of Illinois, have invented certain new and useful Improvements in Coin-Counters; and I do hereby declare that the following is a full, clear, and exact description of the same, reference being had to the accompanying drawings, and to the letters of reference marked thereon, which form a part of this specification.

This invention relates to improvements in coin-counters of the class described in my application for patent filed on the 18th day of March, 1901, Serial No. 51,757.

The object of the invention is to provide a simplified construction of great durability and one in which clogging of the coins or other articles or a false count of the same is rendered impossible at whatever speed the mechanism is driven.

The invention consists in the matters hereinafter described, and more fully pointed out and defined in the appended claims.

In the drawings, Figure 1 is a top plan view of a device embodying my invention. Fig. 2 is a section taken on line 2 2 of Fig. 1. Fig. 3 is a fragmentary plan showing parts removed. Fig. 4 is an enlarged plan view with the receiving tray or pan broken away. Fig. 5 is a section taken on line 5 5 of Fig. 4 and showing the registering device in elevation. Fig. 6 is a section taken on line 6 6 of Fig. 4. Fig. 7 is a fragmentary section of the same, affording an inner view in elevation of the separating-blade. Fig. 8 is an enlarged fragmentary vertical section of the separating-blade and one of the teeth of the coin-disk. Fig. 9 is a perspective view of the separating-blade. Fig. 10 is an enlarged fragmentary detail of the coin-carrying wheel.

As shown in said drawings, said coin-counter comprises a bed-plate A, circular in form and having thereon the circular upwardly-directed marginal flange *a* rigidly secured thereto near the periphery of the bed-plate and forming therewith a circular pan in which is journaled the coin-actuating means. A bracket A′ is secured below and to the bed-plate and is provided with an inwardly-directed arm *a′*, having a bearing *a²* thereon in axial alinement with a central aperture extending through said bed-plate. A rotative shaft B is journaled in said bearing and in the aperture of the bed-plate, and a beveled gear *b* is rigidly secured on said shaft below the bed-plate and intermeshing with a beveled pinion *b′* on the shaft B′, which is journaled in said brackets at a right angle with the shaft B and provided externally with a crank or other means for rotating the same.

Rigidly secured on the shaft B and fitting closely to the upper surface of the bed-plate is the coin-disk C, provided on its periphery with radial teeth *c*, as shown in Figs. 1, 4, and 10. Said coin-disk between said teeth is cut away to provide partly-circular notches corresponding with the curvature of the coins to be received therein. The thickness of the coin-disk C is approximately equal to that of the coin to be actuated thereby, and the forward edge of each of the teeth is beveled on the upper side, as shown in Fig. 10, thereby reducing said front edge of the teeth to a thickness not greater than the thinnest coin of the denomination the given machine is adapted to count. Obviously the coin-disk may be secured on the shaft in any of several ways, as shown, however, and preferably a cylindric collar D is rigidly secured concentrically with and on the upper side of the coin-disk. The teeth *c* extend beyond the periphery of the collar for their entire length, as shown in Fig. 4, whereby the vertical edge of the collar and the flange *a* form the walls for a circular track or channel extending around the machine and adapted to receive the coins and into which the teeth *c* of the coin-disk project for their entire length. Said collar is bored to receive the end of the shaft B and is secured to said shaft by a set-screw or other suitable means. Said collar is cored out on its upper side to reduce weight, and conveniently the upper end of the shaft B is reduced in size and threaded. A covering-plate *d* is fitted over the end of the shaft and secured on the top of the collar by means of a nut *d′*.

Secured upon a laterally-extending projection a^2 of the bed-plate is the register E, which may be of any desired kind or type and which, as shown, has provided on the outer end of its shaft, with a beveled pinion e, meshing with a corresponding beveled pinion e', the shaft e^2, which projects above said projection a^2 and is provided above the same with a registering-wheel E', having teeth on its periphery, as shown in dotted lines in Fig. 4, and which projects into the path of the moving coins as the same are swept along to the discharge-orifice (indicated in dotted lines at K on Fig. 4) by the teeth c of the coin-disk. The teeth on the registering-wheel E' are spaced a sufficient distance apart and are so positioned with respect to the path of the coin as to insure each coin moving said registering-plate wheel in passing sufficiently to indicate or count one on the register. The plate e^3 forms the base for the register and fits over the registering-wheel, as shown in Fig. 4, entirely covering and concealing the same from view and effectually protecting the same from dust, dirt, or improper interference.

Rigidly connected with the base-plate A, opposite the crank, is the receiving-pan F, which, as shown, is metallic and provided with upwardly-extending sides which open through the side a of the machine. Said pan may be of any capacity, but preferably is sufficiently large to hold a large quantity of coin. The pan, as shown, is supported upon a base f, which is of sufficient weight to serve as a counterbalance for the weight of the machine when said pan is supported upon a table, desk, or the like. At the point where the side wall of the pan opens through the wall a of the machine the open space provided is sufficient to permit coins in quantities to be drawn from the pan upon the teeth of the coin-disk, as means are provided for separating the coin and arranging each in engagement with a tooth, so that as the coin is swept past the registering-wheel but a single coin is carried by each tooth. This is in part accomplished by brushes G, G', G^2, and G^3, which are arranged in the channel in the order named between the point where the coin enters the channel and the registering-wheel. Each of said brushes consists of a downwardly-depending plate or blade g, pivotally engaged upon a horizontal pintle g', secured in the wall and the inner end of which extends close to the collar D. A spring g^2 is engaged on each pintle and acts to hold the plate or blade carried thereon in a vertical position, as shown in Figs. 5 and 6, but permits the depending ends of the blades to be pushed rearwardly by the coins as they pass beneath the same. The length of the blade G is such that the lower margin thereof is elevated some distance above the coin-disk, as shown in Fig. 5, thereby permitting several coins, if necessary, to pass beneath the same. The succeeding brushes G', G^2, and G^3, however, gradually approach the coin-disk until, as shown, the lower margin of the brush G^3 extends so close to the disk as to prevent a coin passing beneath the same unless carried between the teeth of said disk.

In advance of the brush G^3 is a separating-blade H, which, as shown, consists of a horizontal plate of steel or the like curved concentrically with the coin-channel and fitting closely in said channel and entirely covering the point of contact of the coin with the teeth of the registering-disk and also the orifice K, through which the coins are discharged into the bag I. The rear edge of the blade is beveled downwardly, as shown in Figs. 7 and 9, and brought to a relatively sharp edge, and the inner side of the same is cut away tangent with the collar D and terminates in a sharp point at the wall a, so that should one of said teeth carry more than one coin past the brush G^3 the edge of the uppermost of said coin engaging upon the edge of the separating-blade will slide up over the beveled surface.

Obviously, owing to the construction described when in operation, the coin-disk should always rotate in the same direction, and to prevent a careless operator accidently or intentionally reversing the rotation of the coin-disk and permitting coins to escape from the machine without registering a stop h is provided between the discharge-orifice and the opening into the pan. Said stop consists of a pin rigidly secured on the base-plate and projecting upwardly beneath said separating-plate and so positioned as to permit the teeth c to clear the same as the disk is rotated, but so near the extremities of said teeth that should the direction of the coin-disk be changed or reversed a coin engaged by one of said teeth would jam against said stop, thereby locking the disk from rotation.

The operation is as follows: Supporting the machine upon a table, desk, or the like, the weight of said pan F serves as a counterbalance for the coin-counting, actuating, and counting mechanism. The coins are dumped into the pan in any desired quantity and a bag or other receiving means supported below the discharge-aperture, as shown in Fig. 5, preferably on a downwardly-extending sleeve extending below said aperture and which may be provided with outwardly-extending pins or hooks to permit the coin-bag to be engaged over the same. Rotating the coin-disk in the direction of the arrow L, (shown on Figs. 1 and 4,) the coins are drawn into the machine into position to be engaged by the teeth c and are swept successively beneath the brushes G, G', G^2, and G^3, which continually act to force the coins rearwardly against the rotation of the wheel and aid in directing the coin into the spaces between the teeth, the rotation of the collar preventing clogging. The last brush G^3, which extends close to the coin-disk, together with the inclined end of the separating-

plate and the bevel on the point edge of each tooth, insure the separation of the coins until each tooth carries but a single coin. The coins swept beneath said separating-blade are successively brought into engagement with the teeth of the registering-wheel, each actuating the same to produce one count on the register and after actuating the register successively drop into the orifice K to the bag. Obviously having observed the number registered previous to the beginning of the counting operation the difference between the same and the highest number registered will be the correct count. As before stated, while the coin-disk is free to rotate in either direction when no coins are engaged thereby the stop *h* prevents any coins being carried into the chute without having first passed the registering-wheel. Obviously said machines may be adapted for coins of any desired size or shape and may, if preferred, be constructed in sets, each adapted to count a particular size or denomination of coin, or, if preferred, each machine may be provided with several different coin-disks and different sizes of registering-wheels, permitting the device to be used interchangeably for several different sizes of coins.

Obviously many details of construction may be varied without departing from the principles of this invention.

I claim as my invention—

1. The combination with a rotative registering-wheel, of a register actuated thereby, a rotative toothed feed-wheel lying in the same plane with the registering-wheel and adapted to engage a coin with each tooth and to move the same immediately against the registering-wheel, and a downwardly-beveled forwardly-inclined portion on the front of each tooth.

2. The combination with registering means, of a rotative coin-disk moving in operative relation therewith, teeth on the coin-disk spaced a distance apart adapted each to engage a separate coin and resilient brushes yieldingly supported above the teeth of the coin-disk, and acting to direct a single coin into engagement with each tooth.

3. In a coin-counting machine the combination with registering means, of a toothed rotative feed-wheel, a portion of each tooth being reduced in thickness to approximately that of the thinnest coin of the denomination to be counted, a plurality of brushes arranged around the periphery of the wheel one of which extends close to the upper surface of the teeth and stationary means in advance of the registering means acting to permit but one coin to be passed to the registering means by a single tooth.

4. The combination with a base having an upwardly-opening peripheral track, of a coin-disk rotative in the bottom of the base and provided with a plurality of thin-edged radial teeth projecting into the track and each adapted to engage a single coin or the like, resilient brushes supported above and extending into proximity with the upper surface of the teeth, a register, a registering-wheel operatively connected therewith, means adapted to prevent reverse rotation of the disk and a separator-blade in close contact with the upper surface of said teeth.

5. The combination with a base, of an annular upwardly-opening passage located near the periphery thereof, a coin-disk, a plurality of thin-edged radial teeth on said disk extending into said passage, a receiving-tray connected with the base and opening into said passage, means for rotating the coin-disk, a register positioned at one side of the base, means extending into said passage adapted to actuate the register, a separator-blade located above and in close proximity with the teeth of the coin-disk acting to permit but a single coin to be carried beneath the same by each tooth into position to actuate the register, an exit-orifice in the base beyond the register and a stop positioned on the opposite side of the exit-aperture from the register and acting to prevent reverse rotation of the coin-disk with coins therein.

6. The combination with a base provided with discharge-aperture extending therethrough, of a rotatable coin-disk journaled in said base, thin-edged teeth thereon, brushes located above the teeth and extending close to the surface of the same, a register and actuating means therefor positioned to be successively engaged by the coin when carried past the same by said teeth.

7. The combination with a base-plate, of a rotatable coin-disk journaled therein, means for rotating the same, radial thin-edged teeth on said coin-disk, an annular track on said base into which the teeth extend, an exit-aperture in the bottom of said track, a register positioned in advance of the exit-aperture, means operated by the passage of coins past the same for actuating the register, pivoted brushes supported on the base and extending varying distances from the upper surface of the teeth, means for delivering coins to be counted to the teeth of the coin-disk and a stop acting to permit the coin-disk with coins therein to be rotated in but one direction.

8. A coin-disk for the purpose specified comprising a plate of metal or the like, teeth on the periphery of the disk, the maximum thickness of said teeth being equal to the maximum thickness of the coin to be counted, and the front edge of each tooth being reduced in thickness to correspond approximately with the thickness of thin or worn coin.

9. In a coin-counter, the combination with a rotative coin-disk, of radial teeth thereon adapted to engage coin or the like having the front edge reduced in thickness, a separating-blade positioned above the teeth and in close

proximity therewith and having the upper surface thereof beveled downwardly at the end directed against the flow of the coins.

10. In a device of the class described the combination with a coin-disk having radial thin-edged teeth thereon, of a collar extending approximately to the base of the teeth and rigidly secured to and rotatable with the disk and a plurality of brushes located above and extending varying distances from the upper surface of the teeth, each brush comprising a plate and a spring holding said plate normally in vertical position.

11. In a device of the class described, a toothed rotative registering-wheel, registering means actuated thereby, a toothed feed-wheel acting to engage a coin or the like with each tooth and carry the same immediately against and past the teeth of the registering-wheel, and means for directing the coin into the teeth of said feed-wheel.

12. In a device of the class described the combination with a toothed horizontally-rotatable feed-wheel, of a peripheral passage surrounding the same, means for delivering coins to be counted into said passage into position for each successive tooth to engage a coin, means for distributing the coins in said passage, and a toothed registering-wheel against successive teeth of which the coins are carried by the feed-wheel and a registering device thereon.

13. In a device of the class described the combination with a closed casing, of a toothed horizontally-revoluble feed-wheel therein, a peripheral passage surrounding the said feed-wheel, means for delivering coins into said passage in position for each tooth of the feed-wheel to engage a separate coin, means for distributing the coins in said passage, a toothed registering-wheel actuated by the moving coin and a register connected therewith.

14. In a coin-counter, the combination with a rotative feed-wheel having a toothed periphery adapted to engage the coins and receive the same flatwise within its interdental spaces, of a toothed rotating counter-wheel for a registering mechanism adapted to mesh with said feed-wheel through the medium of a passing coin interposed directly between the same, and a plurality of brushes adapted to prevent clogging of the coins in the feed-wheel.

15. In coin-counters, the combination with the rotary feed-wheel having a toothed periphery arranged to selectively admit separate coins from an indiscriminate group and to seat the same flatwise within its interdental spaces, of a register and an actuating device therefor, operated by said feed-wheel through the medium of a passing coin interposed immediately between the same, and a plurality of resilient brushes in close relation to the teeth of said feed-wheel.

16. In coin-counters, the combination with the rimmed pan, of a rotary feed-wheel located at the base thereof, and peripherally toothed to selectively admit separate coins from an indiscriminate group, and to seat the same flatwise within its interdental spaces, of a toothed, rotating counter-wheel for the register mechanism, in mesh with the feed-wheel, substantially at the plane thereof, through the medium of the passing coin interposed directly between the same, and means adapted to regulate the feeding of said coins.

17. In coin-counters the combination with the rimmed pan, and with the horizontal rotary feed-wheel located at the base thereof and peripherally toothed to selectively admit separate coins from an indiscriminate group, and to seat the same flatwise within its interdental spaces, of the cut-off or separating blade positioned above the teeth in said wheel, in close proximity therewith, and a toothed rotative counter-wheel for the registering mechanism located beyond said cut-off, and in mesh with said feed-wheel, substantially at the plane thereof, through the medium of the passing coin, interposed immediately between the wheels.

18. In coin-counters, the combination with the fore-tray and the rimmed pan having side inlets therefrom, of a rotative feed-wheel located at the pan-bottom and peripherally toothed to receive the coins flatwise and edge on from said tray, the register mechanism, and the actuator therefor directly operated by said feed-wheel through the medium of the passing coin interposed directly between said actuator and said feed-wheel.

In testimony whereof I have hereunto subscribed my name in the presence of two subscribing witnesses.

JAY M. JOHNSON.

Witnesses:
C. W. HILLS,
A. C. ODELL.