Office de la Propriété Intellectuelle du Canada
Un organisme d'Industrie Canada

Canadian Intellectual Property Office
An agency of Industry Canada

CA 2557511 C 2012/12/11

(11)(21) **2 557 511**

(12) **BREVET CANADIEN**
**CANADIAN PATENT**

(13) **C**

(86) Date de dépôt PCT/PCT Filing Date: 2004/08/13
(87) Date publication PCT/PCT Publication Date: 2005/09/09
(45) Date de délivrance/Issue Date: 2012/12/11
(85) Entrée phase nationale/National Entry: 2006/08/25
(86) N° demande PCT/PCT Application No.: ES 2004/000374
(87) N° publication PCT/PCT Publication No.: 2005/082224
(30) Priorité/Priority: 2004/02/27 (ES P200400466)

(51) Cl.Int./Int.Cl. *A47L 13/58* (2006.01), *A47L 13/59* (2006.01)

(72) Inventeur/Inventor:
ESCARPA GIL, JULIAN, ES

(73) Propriétaire/Owner:
SP BERNER PLASTIC GROUP, S.L., ES

(74) Agent: MARKS & CLERK

(54) Titre : RINCE-SERPILLIERES POUR SEAUX
(54) Title: WRINGER FOR SCRUBBING BUCKETS

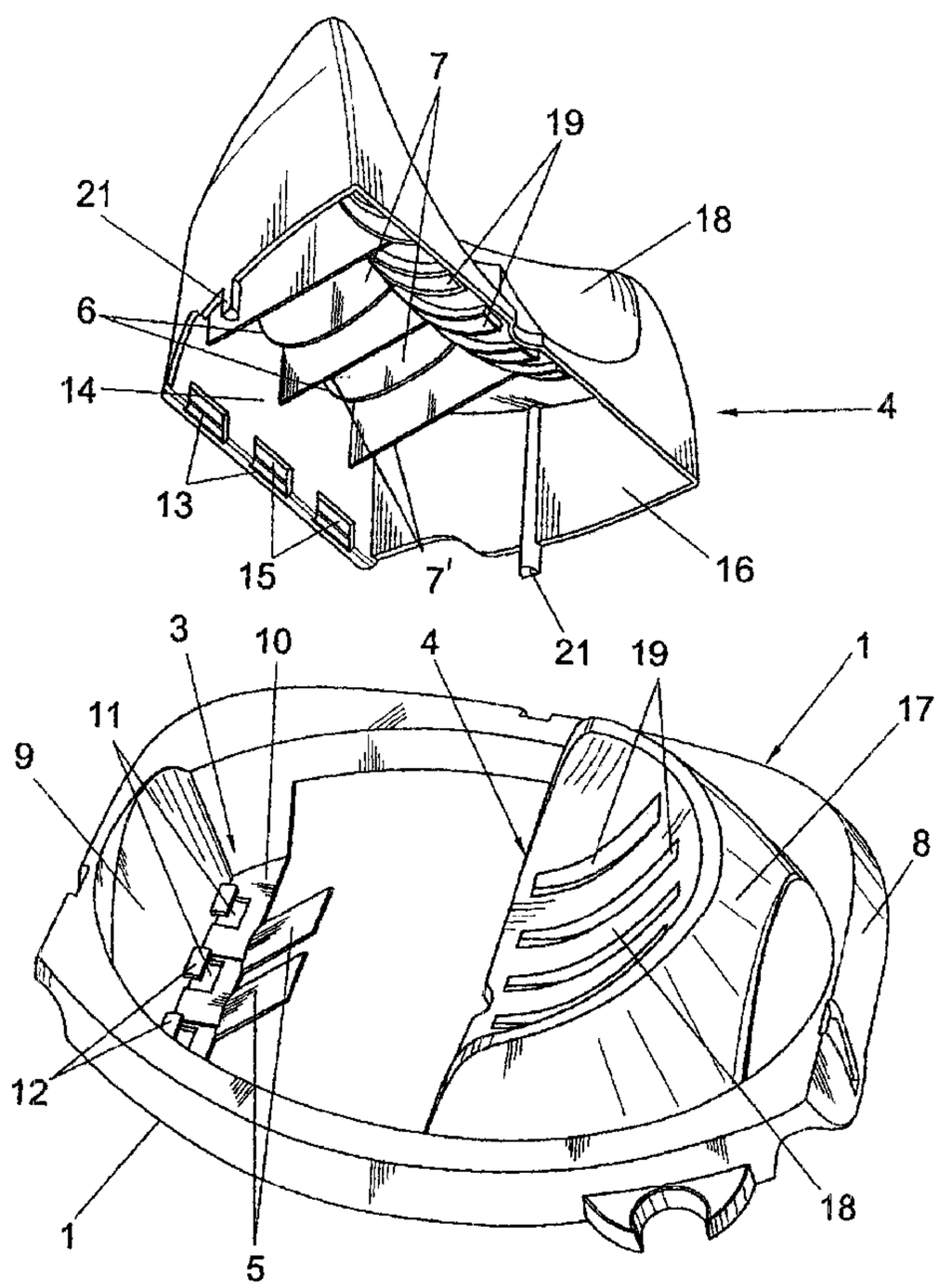


(57) Abrégé/Abstract:
The inventive wringer for scrubbing buckets basically comprises two independent tilting parts of a wringer (4) which are pivotally coupled inside the space of a support (1) fixed to the bucket mouthpiece. Said independent parts (4) are pivotally coupled with parallel axes communicating with the end spaces (3) of the support (1) and are tiltable oppositely to the resistance of spring elements (5).

**Abstract:**

The inventive wringer for scrubbing buckets basically comprises two independent tilting parts of a wringer (4) which are pivotally coupled inside the space of a support (1) fixed to the bucket mouthpiece. Said independent parts (4) are pivotally coupled with parallel axes communicating with the end spaces (3) of the support (1) and are tiltable oppositely to the resistance of spring elements (5).

# WRINGER FOR SCRUBBING BUCKETS

## FIELD OF THE INVENTION

The present invention generally relates to a wringer for scrubbing buckets, more specifically for wringing a mop.

## BACKGROUND OF THE INVENTION

At the present time, mop wringers for scrubbing buckets exist which adapt to the mouthpiece of the buckets and have a structure which includes an inverted truncated-conical cavity with the bottom and side wall thereof having holes, so that to wring out the mop the head thereof is introduced inside pressing and rotating the mop to wring out the same.

Other wringers comprise a structure which includes a frame for securing to the mouthpiece of the bucket and a structure which incorporates downward convergent flexible elements which join in communication with a perforated lower base, so that when pressing down with the mop those

elements press on the head in order to wring it out, so that when one ceases to push downwards with the mop, those elements recover their idle position.

Among these wringers are found the patents of invention numbers US2002/0066152 and EP 489237.

The first of these basically comprises an assembly of narrow flexible strands which define a truncated-conical space, at the same time as such strands converge downwards into a circular base.

On the other hand, the patent of invention number EP 489237 comprises two symmetrical assemblies of narrow flexible strands convergent toward the bottom which finish in an approximately rectangular base.

## SUMMARY OF THE INVENTION

An object of the invention is to facilitate the same without having to carry out any rotational movement on the mop when wringing it out.

Therefore, with the new wringer, when carrying out the wringing of the mop it will only be necessary to press down with the same, so that during this operation the structure of the wringer presses on the head of the mop.

In some embodiments, the wringer for scrubbing buckets, comprises two perforated independent pieces with tilting movement against the resistance of flexible spring-like elements which maintain those confronting independent pieces in the idle position, which pieces are those which serve to wring out the mop when the same is pushed downward in the wringer.

Another characteristic of the invention relates to the two independent pieces which are coupled in communication with individual parallel axes mounted underneath in end spaces of a frame-support coupled on the mouthpiece of the scrubbing bucket.

Another characteristic is that the flexible spring-like elements comprise upward partitions which emerge at the bottom from the lower end parts of the frame-support in the proximity of the tilting axes of the two pieces, so that the end edges of such partitions have contact with and confront the arched edge of ribs which are part of the independent pieces, which structure is also new.

Thus, each of the independent pieces comprises a

hollow structure open underneath comprising a domed upper base of arc-shaped form with a rear chamfer and a perimetral skirt, a part of which comprises a wide recessed surface having parallel slots constituting the perforations of the wringing action.

Joined to this recessed surface and at the rear part of the perimetral skirt are the ribs with arched edges and other reinforcement ribs parallel to the previous ones.

From the free edge of the sides of the perimetral skirt short extensions emerge which, when stacking prevent the weight of the various wringers and buckets from acting on the spring elements, achieving thereby that the latter lose efficacy when using the wringer. Thus the presence of those short extensions is intended to prevent the partitions from acting when the two wringer pieces descend due to the weight that they have to support through the stacking of several buckets, it being pointed out that the design of said buckets allows the introduction in their interior, resting on their lower base, of the assembly formed by the wringer pieces and their support. The weight of the stacked buckets would then damage the partitions losing their spring effect with the corresponding loss of wringing efficacy.

Furthermore, the pivotally coupled axes are mounted in communication with the free edge of the length of straight wall of the perimetral skirt. Such axes are configured as the result of small windows which limit portions of axis in the same direction as they are inserted in communication with complementary recesses established in other curved portions confronted with other small windows established in the two end spaces.

With the arrangement described, when the mop is inserted between the two wringer pieces an axial force is applied in the downward sense which transmits the downward movement to those two pieces against the resistance of the

spring-like partitions.

The wringing operation consists basically in presenting the mop on the wringing surface which is in the idle state and, next, applying pressure in the downward sense, so that the two wringer pieces perform a rotational movement, in opposing directions, compressing the mop with the corresponding removal of the excess liquid.

With the new mop wringer, proper wringing is obtained, simply, by applying downward pressure on the wringing surface in contrast with the conventional wringers wherein correct wringing is achieved by means of pressure and turning the mop around an axial axis.

With the new wringing system, with respect to the conventional system, the effort to remove the excess liquid which the mop holds is substantially less and articular injuries are avoided or greatly reduced, like the well-known and very bothersome "tennis elbow".

Another characteristic of the invention are the tie members which constrain the downward tilting travel of the two independent pieces which perform the wringing. These tie members are joined at their ends to the bottoms of the end spaces of the frame-support.

They assist the upward partitions so that the wringing pieces do not end up breaking, on surpassing a certain degree of flexion. Contact is made on the tie members by short lengths of the edges of the perimetral skirt which is part of the wringing pieces.

The tie members have butts to brake the sliding over them by the lengths of the edge of each wringing piece, at the end of the tilting during the wringing action.

It also incorporates a new hook or anchor for the mop handle. It comprises a flexible arm which closes the space against the wall of the frame-support. It is more simple, effective and comfortable to use.

Another improvement relates to the structure which

the pivotal coupling of the wringing pieces has, which coupling makes assembly simpler, being easier to automate, in that between the front wall and a boss with conical opening the axis or anchorage parts are taken to the corresponding place.

Next, to facilitate a better understanding of this descriptive specification and forming an integral part thereof, the same is accompanied with figures in which by way of illustration and not restrictively, an aspect of the invention has been represented.

According to an aspect of the present invention, there is provided a wringer for scrubbing buckets, which is coupled on a part of the mouthpiece of a bucket, the wringer comprising:

two independent wringing pieces which tilt against a resistance of spring elements, the two independent wringing pieces being coupled inside a frame-support which is secured on the mouthpiece of the respective bucket wherein the two independent wringing pieces consist of an enclosing structure including a perimetral skirt domed at a top of the perimetral skirt, which limits a wide curved recessed and slotted surface, also incorporating inside the enclosing structure internal ribs with arched edges and parallel ribs, the perimetral skirt consisting of a section of rear straight wall arranged in communication with front walls of the frame-support;

wherein the two independent wringing pieces are pivotally coupled in a space existing between a plurality of small windows and a corresponding plurality of upper curved portions being the small windows and the upper curved portions placed in end spaces of the frame-support, the end spaces being defined by means of confronting the front walls and lower bottoms, the spring elements being defined by upward partitions integral with at least one of the lower bottoms of the end spaces, and free ends of the upward partitions contact the arched edges of the internal ribs with arched edges that are integral with the two independent wringing pieces.

## BRIEF DESCRIPTION OF THE DRAWINGS

Figure 1. It shows a view of the scrubbing bucket wringer, according to an embodiment of the invention. The wringer is in the idle position.

Figure 2. It shows a view of the wringer in the active position.

Figure 3. It shows a perspective, exploded view of the wringer.

Figure 4. It shows a view in schematic elevation of the stacking of several wringers together with the corresponding buckets.

Figure 5. It shows a view in perspective of a frame-support which is part of the wringer assembly according to an embodiment of the invention.

## DESCRIPTION OF THE PREFERRED MODE OF EMBODIMENT

Considering the numbering adopted in the figures, the wringer for scrubbing buckets is constituted from a frame-support 1 which is coupled on the mouthpiece of a bucket 2, whilst therein two end spaces 3 are defined where two independent and symmetrical pieces 4 are coupled pivotally against the resistance of upward partitions 5, the free ends of which are in contact with arched edges 6 of ribs 7 integral with the two independent pieces 4, which cover the interior space limited by the frame-support 1 which delimits a planar configuration in form of an ellipse, on

the farthest ends of which small elevations 8 are defined corresponding with the end spaces 3 the latter limited by front walls 9 and lower planar bottoms 10 from which emerge the two upward partitions 5 by way of spring-like element.

In said planar bottoms 10 small windows 11 are defined confronting raised curved portions 12 where portions of axis 13 are coupled corresponding with the free edges of straight walls 14 which are part of the independent pieces 4, said portions of axis 13 originating as a consequence of other windows 15 established in such straight walls 14, which are arranged in communication with the front walls 9.

Each of the tilting pieces 4 comprises an enclosing structure defined by a perimetral skirt 16 which includes the straight wall 14, an arched and domed upper part 17 which limits a wide recessed front space 18 which has several parallel slots 19 for the wringing of the mop.

The confronting faces of the two symmetrical pieces 4 have arched end lengths 20 with the purpose that during the tilting the two pieces do not interfere through their nearest confronting faces.

The ribs 7 of arched edges 6 are arranged in the interior space of the pieces of enclosing structure 4, there being other reinforcing intermediate parallel ribs 7'.

Moreover, from the side ends of the perimetral skirt short extensions 21 emerge, which when stacking prevent the weight of the various wringers and buckets from acting on the spring elements 5, achieving with this that the same lose efficacy when using the wringer.

Tie members 22 have also been foreseen constraining the downward tilting wringing of the two independent wringing pieces 4. Said tie members 22 are joined at their ends by the bottoms 10 of the end spaces 3 of the frame-

support 1.

The tie members 22 assist the upward partitions 5 so that the wringing pieces 4 do not lose efficacy nor end up breaking, on surpassing a certain degree of flexion. Contact is made by portions of the free edge of the perimetral skirt 16 on the tie members 22, which skirt is part of the wringing pieces 4.

The tie members 22 in turn incorporate small upper butts 23 to brake and to limit the sliding made thereon by the portions of the free edge of each wringing piece 4, precisely at the end of the tilting action during the wringing.

A new hook or anchor has also been foreseen for the mop handle. It comprises a flexible arm 24 which closes the space against the wall of the frame-support 1.

Lastly another articulated coupling system has been foreseen of the wringing pieces 4 in the end spaces 3.

For this, flukes have been foreseen in the form of an inverted "L" 25 which emerge from the bottom 10 of the end spaces 3, at the same time that such flukes 25 face small projecting portions 26 integral with the front wall 9 of the spaces 3, a conical opening being defined in this way between the free arms of the flukes 25 and the small projecting portions 26. With this new system the coupling and assembly will be simpler.

The embodiments of the invention in which an exclusive property or privilege is claimed are defined as follows:

1. Wringer for scrubbing buckets, which is coupled on a part of the mouthpiece of a bucket, the wringer comprising:

two independent wringing pieces which tilt against a resistance of spring elements, the two independent wringing pieces being coupled inside a frame-support which is secured on the mouthpiece of the respective bucket wherein the two independent wringing pieces consist of an enclosing structure including a perimetral skirt domed at a top of the perimetral skirt, which limits a wide curved recessed and slotted surface, also incorporating inside the enclosing structure internal ribs with arched edges and parallel ribs, the perimetral skirt consisting of a section of rear straight wall arranged in communication with front walls of the frame-support;

wherein the two independent wringing pieces are pivotally coupled in a space existing between a plurality of small windows and a corresponding plurality of upper curved portions being the small windows and the upper curved portions placed in end spaces of the frame-support, the end spaces being defined by means of confronting the front walls and lower bottoms, the spring elements being defined by upward partitions integral with at least one of the lower bottoms of the end spaces, and free ends of the upward partitions contact the arched edges of the internal ribs with arched edges that are integral with the two independent wringing pieces.

2. Wringer for scrubbing buckets according to claim 1, wherein the two independent wringing pieces are pivotably coupled along individual parallel tilting axes of the two

independent wringing pieces that consist of alternate portions of axis corresponding with a free edge of the rear straight wall of the perimetral skirt, the alternate portions of axis being coupled in complementary holes limited between the at least one of the lower bottoms of the end spaces of the frame-support and a plurality of upper curved portions.

3. Wringer for scrubbing buckets according to claim 1, wherein short extensions emerge from a free edge of end sides of the perimetral skirt, so as to prevent the spring elements from being affected negatively during stacking.

4. Wringer for scrubbing buckets according to claim 1, wherein it comprises tie members joined by ends of the tie members to free edges of the at least one of the lower bottoms of the end spaces, so as to limit the downward tilting of the two independent wringing pieces.

5. Wringer for scrubbing buckets according to claim 4, wherein the tie members include pairs of upper protuberances whereon abut portions of the free edges of the perimetral skirt of the two independent wringing pieces in their downward tilting limitation during wringing action.

6. Wringer for scrubbing buckets according to any one of claims 1 to 5, wherein the frame-support incorporates an element for anchoring a mop handle, defined by a single flexible arm.

7. Wringer for scrubbing buckets according to claim 1, wherein the two independent wringing pieces are pivotably

coupled along individual parallel tilting axes of the two independent wringing pieces that consist of alternate portions of axis corresponding to a free edge of straight walls of said two independent wringing pieces, the alternate portions being coupled in holes of conical opening defined by flukes in the form of an inverted "L" and projecting portions integral with front walls of the frame-support, being said flukes located at the bottom of the end spaces.

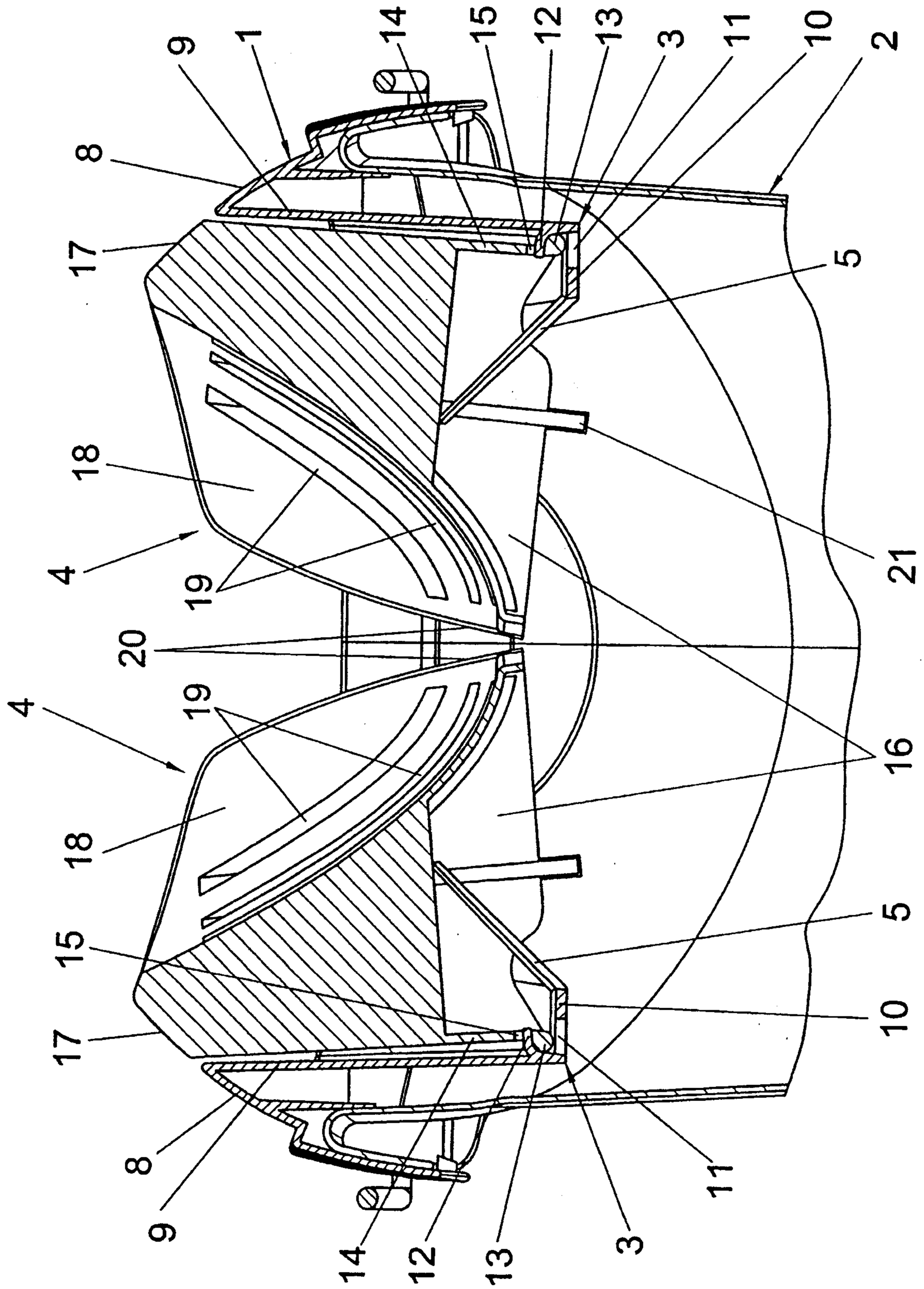


FIG. 1

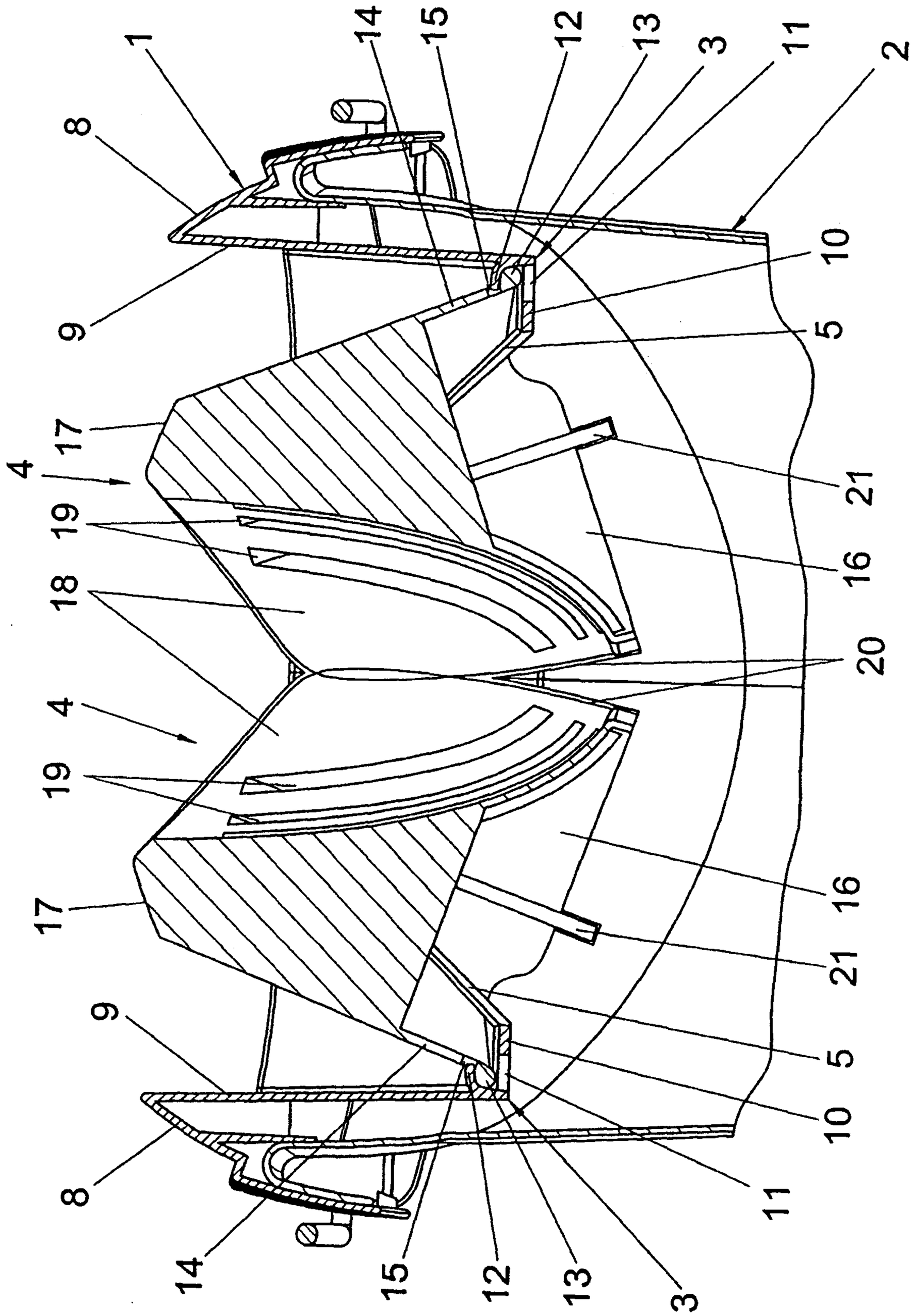
1
8
9
14
15
12
13
3
11
2
10
5
17
4
19
18
21
16
20
4
19
17
16
21
9
5
10
8
11
14
15
12
13
3

FIG. 2

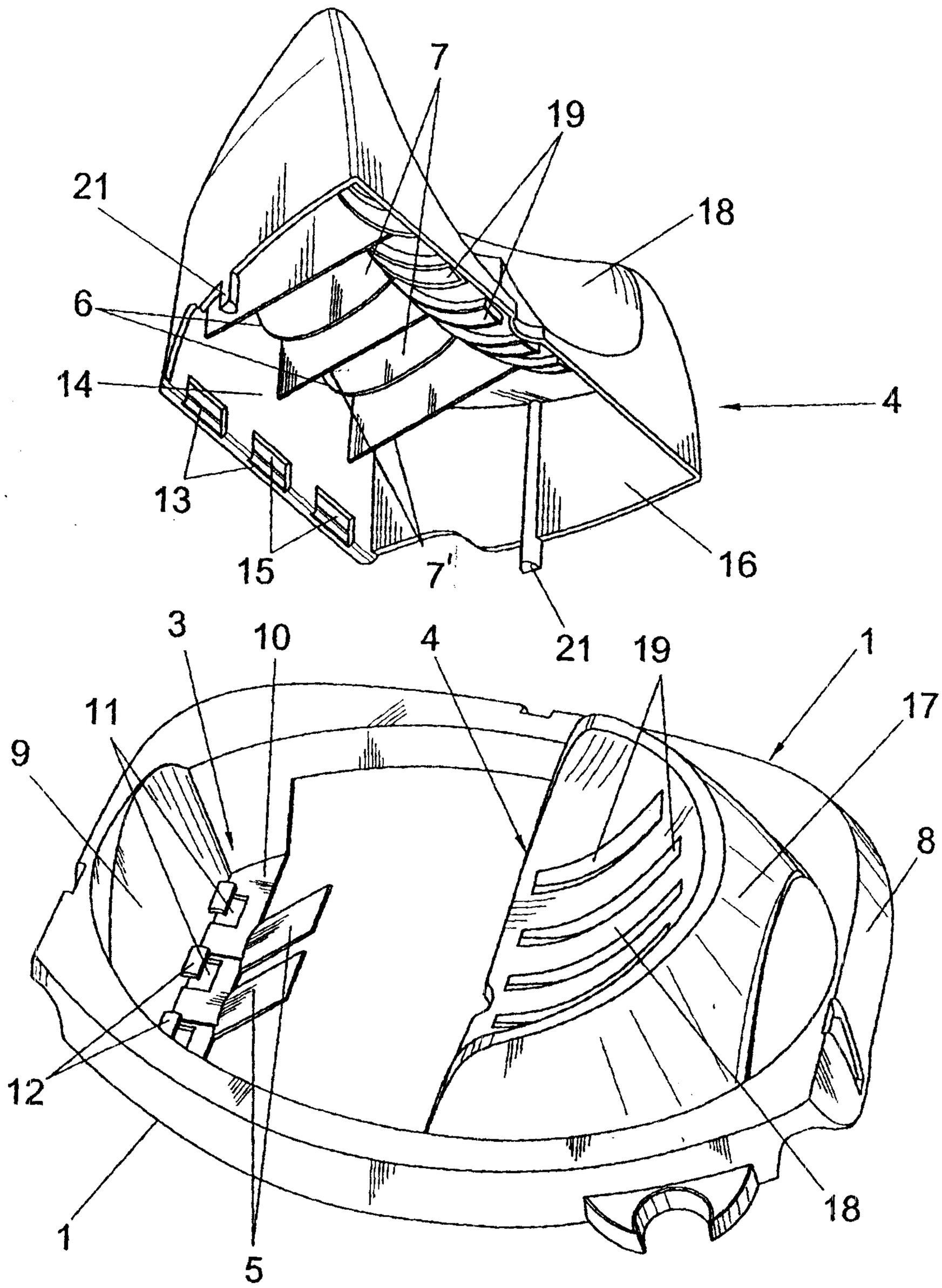


FIG. 3

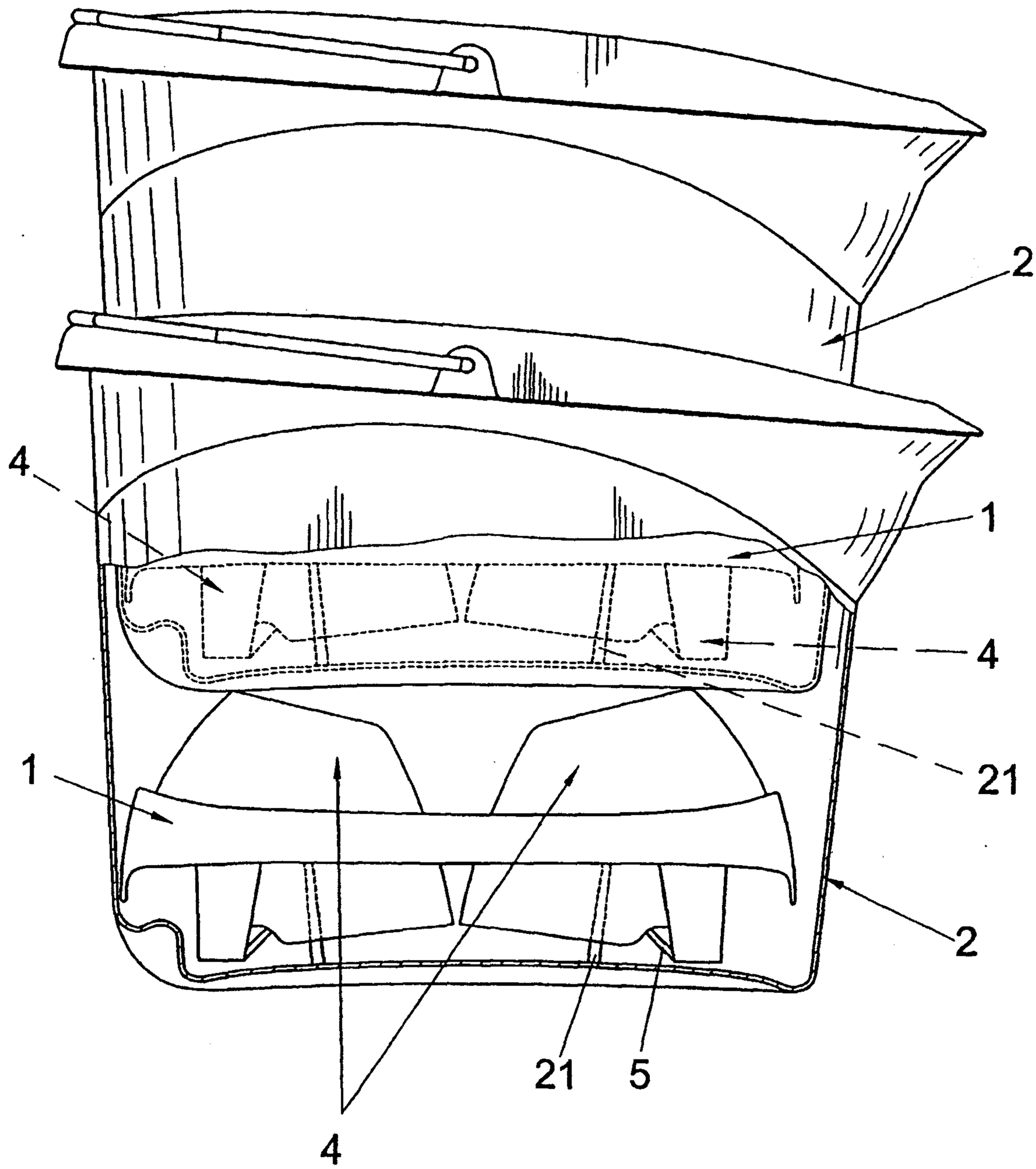


FIG. 4

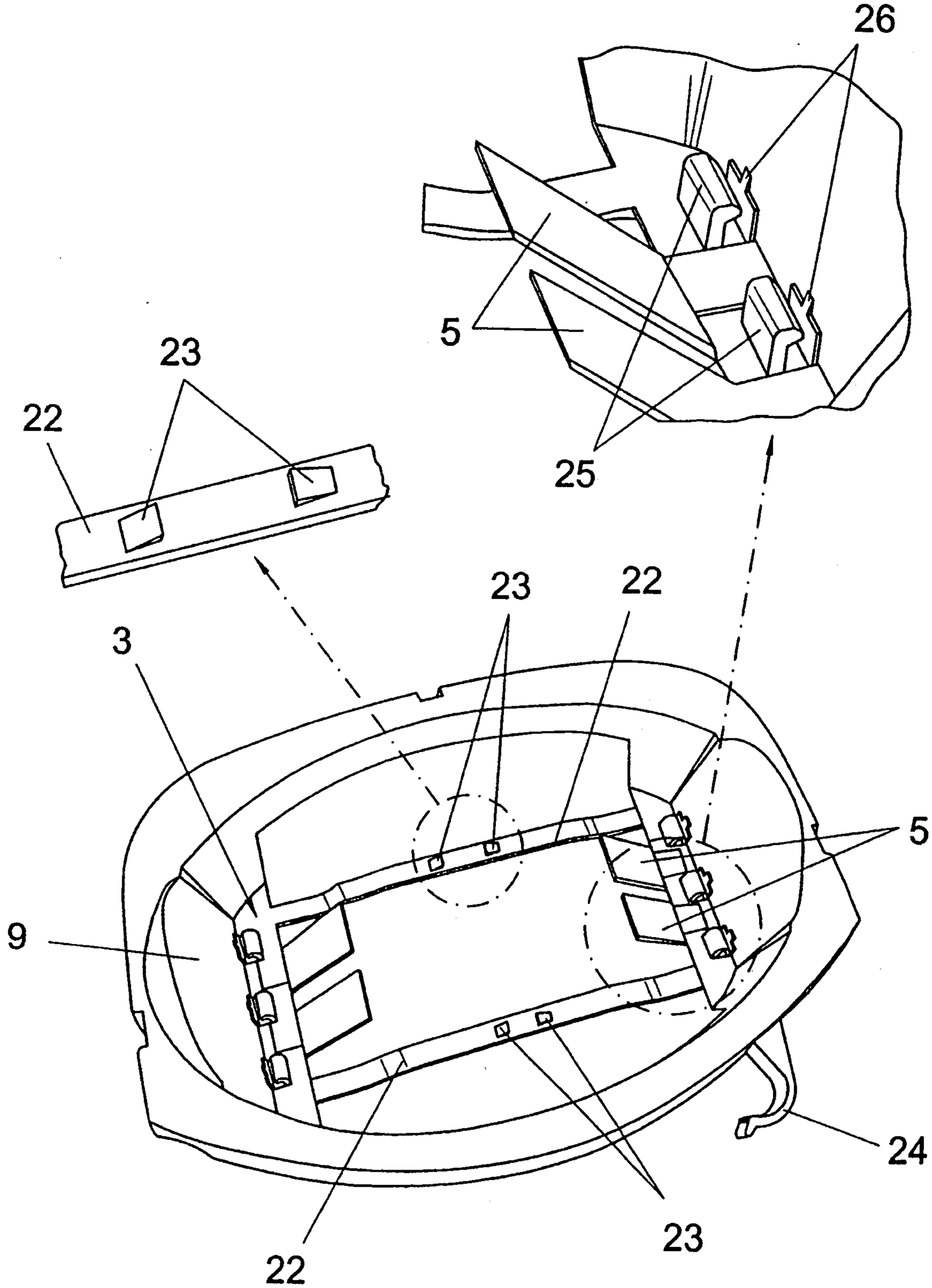


FIG. 5

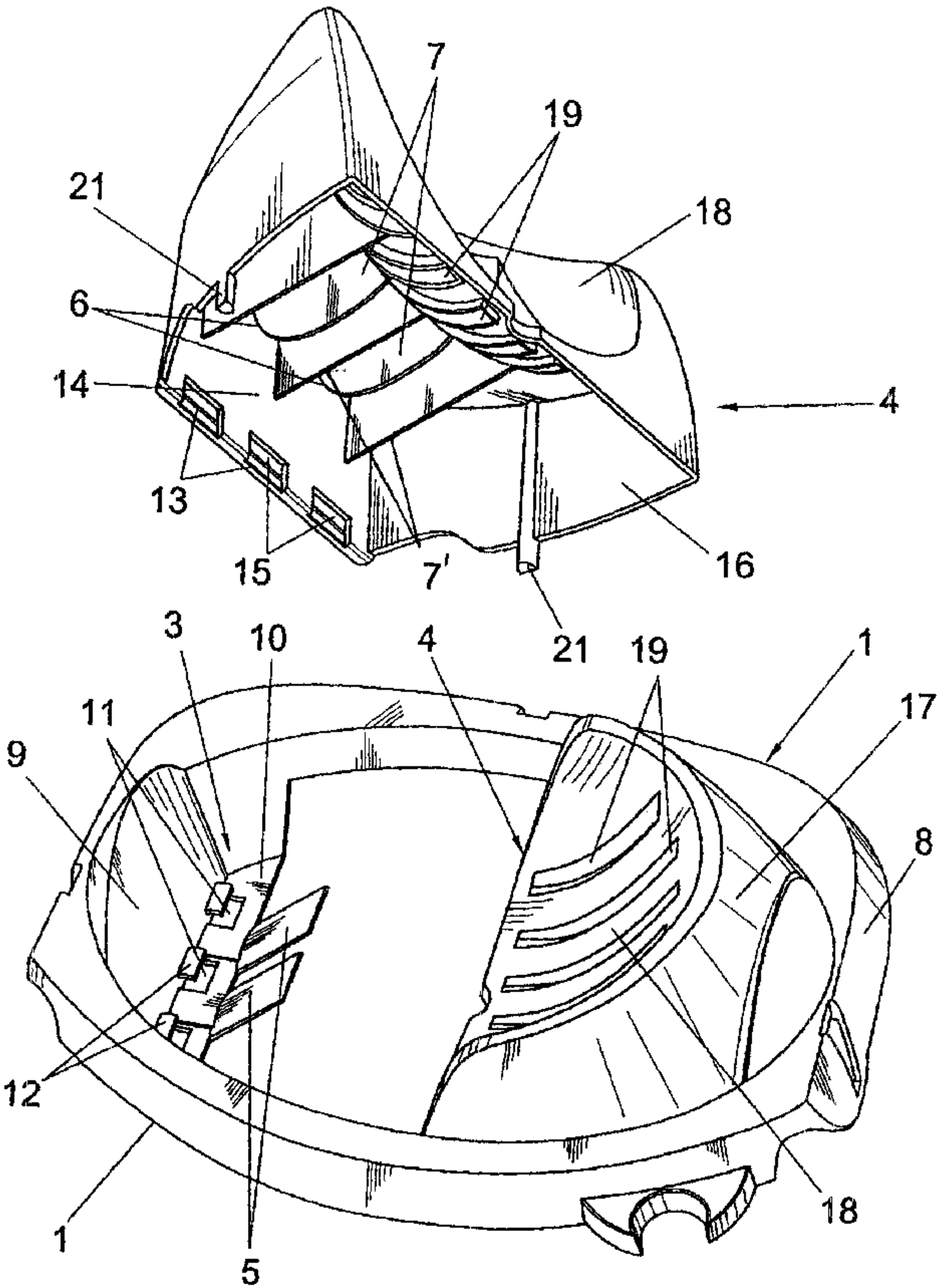
7
19
21
18
6
14
4
13
15
7'
16
21
3
10
4
19
1
11
17
9
8
12
1
5
18