N. H. SHERRILL.

GATE-HANGER.

No. 193,559. Patented July 24, 1877.

Fig. 1.

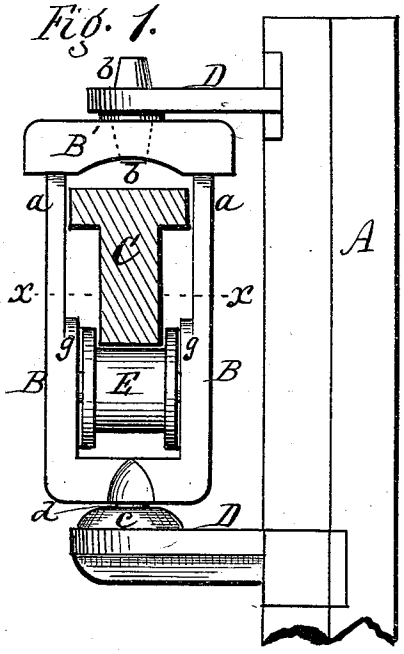

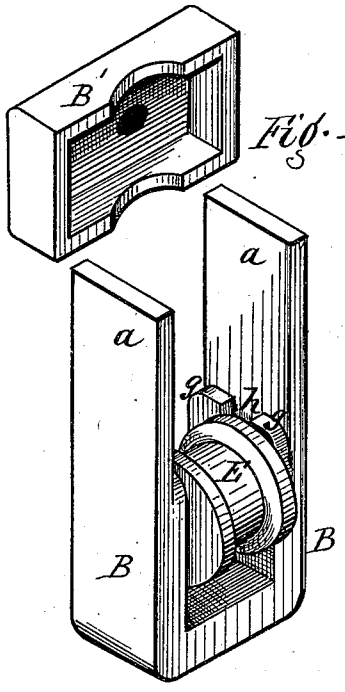

Fig. 2.

Fig. 3.

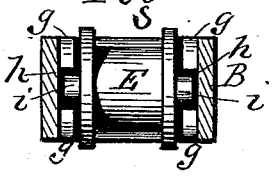

Fig. 4.

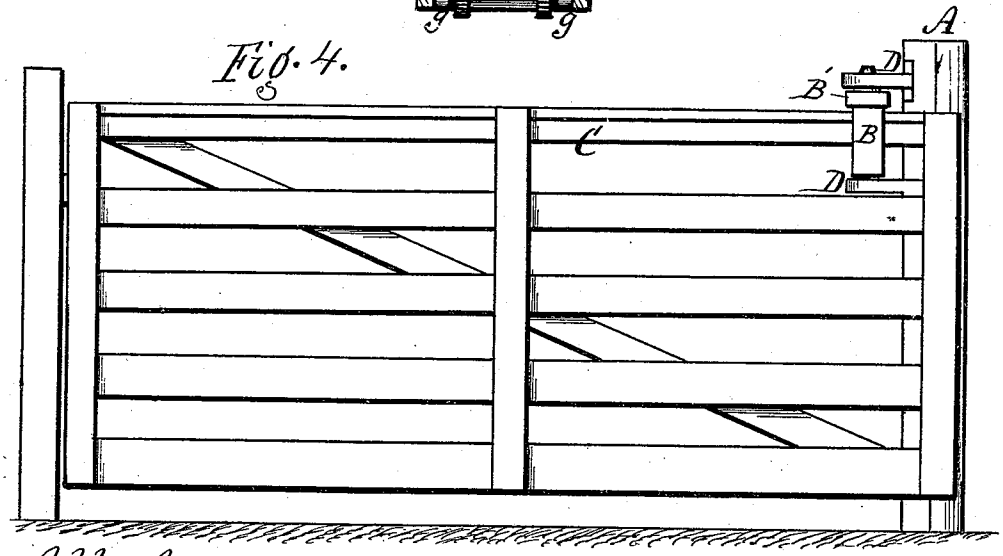

Attest.

Jacob Spahn

Louis Spahn.

Inventor.

Nathaniel H. Sherrill

per R. F. Osgood

Atty.

N. PETERS, PHOTO-LITHOGRAPHER, WASHINGTON, D. C.

UNITED STATES PATENT OFFICE.

NATHANIEL H. SHERRILL, OF LE ROY, NEW YORK.

IMPROVEMENT IN GATE-HANGERS.

Specification forming part of Letters Patent No. **193,559**, dated July 24, 1877; application filed December 29, 1876.

To all whom it may concern:

Be it known that I, NATHANIEL H. SHERRILL, of Le Roy, in the county of Genesee and State of New York, have invented a certain new and useful Improvement in Gate-Hangers; and I do hereby declare that the following is a full, clear, and exact description of the construction and operation of the same, reference being had to the accompanying drawings, in which—

Figure 1 is an elevation of my improved hanger applied to a gate-post, and showing the upper rail of the gate resting therein. Fig. 2 is a perspective view of the hanger with the top removed from place. Fig. 3 is a cross-section of the hanger in line *x x* of Fig. 1. Fig. 4 is an elevation of a farm-gate, arranged in my improved manner.

My improvement relates to that class of farm-gates which slide half-way back and then swing around at right angles to open the passage-way. The upper rail usually slides through a pivoted hanger. This hanger is usually made in a single piece, with four closed sides, or else is made with an open top or side. If made in the form of a closed loop, it has to be inserted over the upper rail before the gate is nailed together, and it then cannot be removed without tearing the gate apart.

If made open topped or sided the gate is liable to be thrown from its bearing in running back, especially when obstructed by snow and ice.

To obviate these objections my invention consists in constructing the hanger in two parts, the first (which is the body) having a closed body with an open top, and the last (which is the cover) having a box-shaped body, which fits removably over the open ends of the first. By this means the hanger may be applied or removed from the gate after the latter is nailed together, as hereinafter more fully described.

A represents the post at the head of the gate; B is the body of the hanger; and B′ is the cap or cover. When these parts are fitted together, as shown in Fig. 1, they form a closed loop, through which passes the upper rail C of the gate. The hanger is pivoted in hinges D D, securely bolted to the post, and when in place said hinges hold the cap upon the body and prevent any separation of said parts.

The upper hinge has double pintles *b b*, either of which fits through a hole in the cap or cover. The lower hinge has a socket, *c*, in which rests a journal, *d*, of the hanger, the socket also serving as an oil-box.

By the means above described the hinges are made right and left. The base of the lower hinge is made forked to fit the angle of the post, which stands corner-wise.

The open ends *a a* of the body of the hanger are square, and fit in the correspondingly square interior of the box, by which means great strength is secured, and no loose action can occur.

g g are ways on the inner side of the hanger, having grooves *h h*, in which rest the journals *i i* of the flanged roller E. The ways extend but part-way up, so that the roller can be inserted or removed at pleasure without taking off the cover B′. The upper rail C of the gate passes through the hanger and rests upon the roller, and is formed in T shape in cross-section, so that while the bottom rests and rolls upon the roller, the upper portion fills the space between the sides of the hanger, which keeps it in place.

I am aware that loops are well known for hanging gates in this manner; but, so far as I am aware, they are cast with four solid closed sides, or are left open at the top. When made solid they have to be fitted over the upper rail before the gate is nailed together, and then cannot be removed. If made open-topped the gate is liable to be thrown off in running back, especially when obstructed with snow and ice.

By constructing the hanger in two parts, as above described, the hanger can be applied and removed after the gate is built, and it presents all the advantages of a closed hanger, being strong, substantial, and costing no more in manufacture than the old style.

Having thus described my invention, I do not claim, broadly, a closed hanger, nor a hanger made in two parts; nor do I claim a hanger made open at the top or side to receive the rail. Neither do I claim a roller or

pulley having journals thereon resting in open seats of the hanger; but

What I claim herein as new is—

The hanger consisting of the two parts B and B′, the first forming the body, constructed with open ends *a a* and seats *h h*, to receive the journals of the pulley, and the last constructed in the form of a cap or box, fitting over and inclosing the top of the other, the whole forming a closed loop, but separable in its parts, to be inserted on or removed from the rail of the gate after the gate is built, as shown and described, and for the purpose specified.

In witness whereof I have hereunto signed my name in the presence of two subscribing witnesses.

NATHANIEL H. SHERRILL.

Witnesses:
R. F. OSGOOD,
JACOB SPAHN.