Sept. 6, 1966 S. I. ASHWORTH ETAL 3,270,463

BLASTING MACHINES

Filed Oct. 15, 1963

3 Sheets-Sheet 1

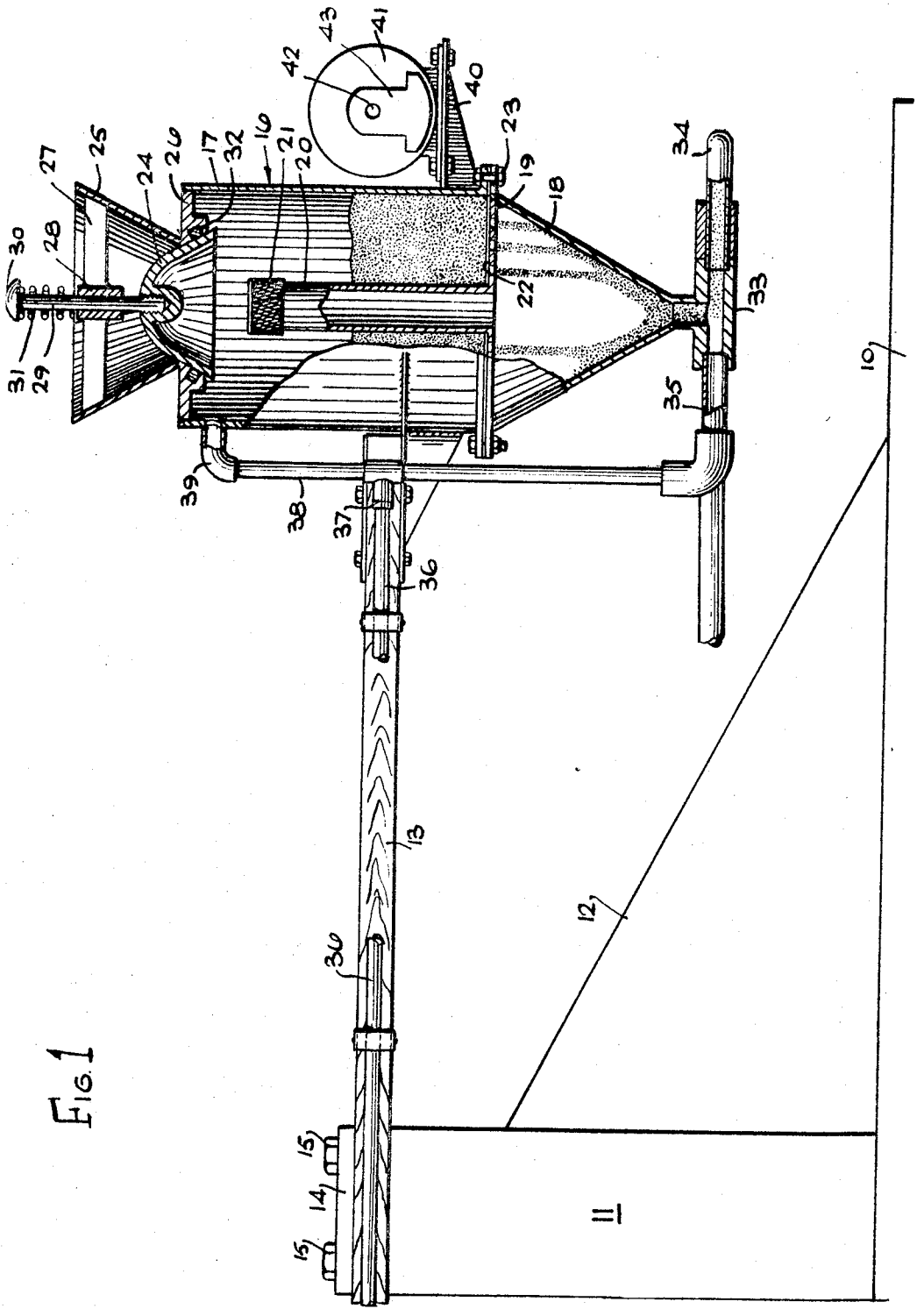

FIG. 1

Sept. 6, 1966 S. I. ASHWORTH ETAL 3,270,463

BLASTING MACHINES

Filed Oct. 15, 1963 3 Sheets-Sheet 2

Fig 2.

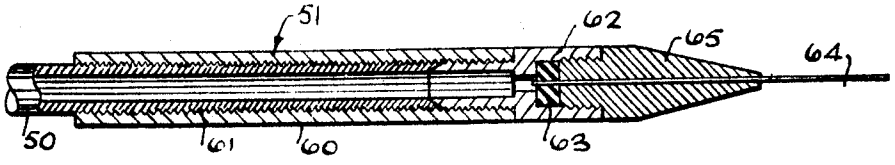

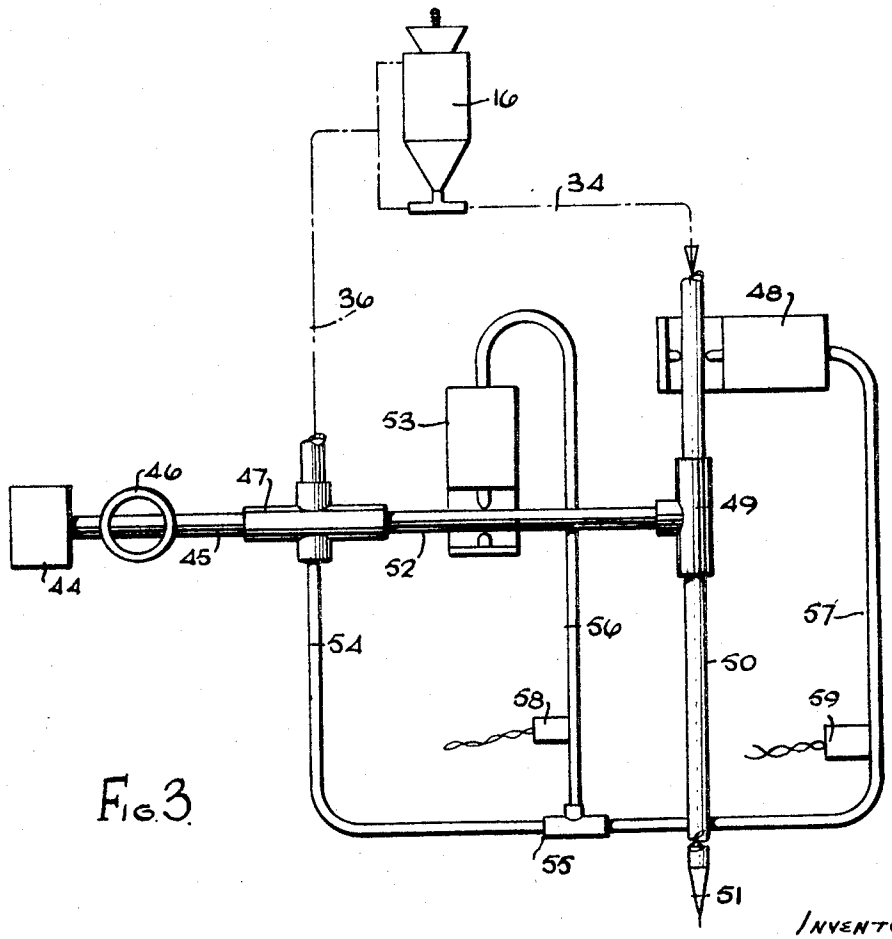

Fig 3.

INVENTORS.

STEWART IVES ASHWORTH

ANTHONY GERARD FIELD

BY Kurt Kelman and

Sept. 6, 1966 S. I. ASHWORTH ETAL 3,270,463

BLASTING MACHINES

Filed Oct. 15, 1963 3 Sheets-Sheet 3

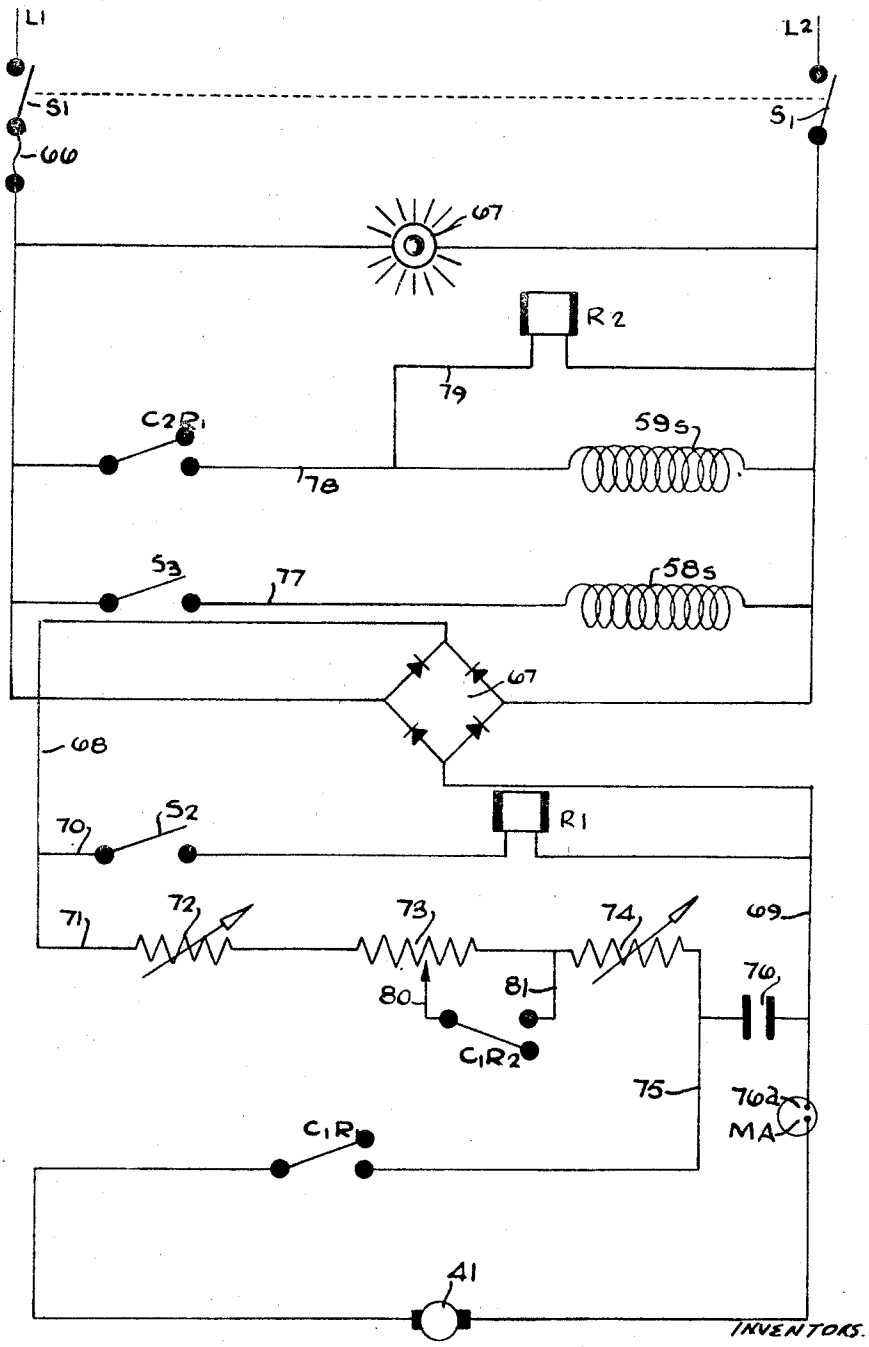

Fig. 4

INVENTORS.
STEWART IVES ASHWORTH
ANTHONY GERARD FIELD
By Kurt Kelman
Attorney

United States Patent Office 3,270,463 Patented Sept. 6, 1966

3,270,463

BLASTING MACHINES

Stewart Ives Ashworth, Studley, and Anthony Gerard Field, Redditch, England, assignors to Abrasive Developments Limited, Henley-in-Arden, England, a British company

Filed Oct. 15, 1963, Ser. No. 319,088
Claims priority, application Great Britain, Oct. 16, 1962, 39,054/62
19 Claims. (Cl. 51—8)

This invention relates to a blasting machine having a blasting nozzle and means to supply abrasive to the nozzle.

An object of the invention is to provide an improved blasting machine in which the supply of abrasive to the blasting nozzle can easily and accurately be controlled.

Accordingly, a blasting machine embodying the invention and having a blasting nozzle and means to supply abrasive to the nozzle is characterized in that said means include a container for abrasive, a sieve in the container through which the abrasive passes to the nozzle as the container is vibrated, resilient means supporting the container for vibration, the container and the resilient means forming a system having a fundamental resonant frequency, driving means for applying power to the system to cause it to vibrate at or adjacent to its fundamental resonant frequency said driving means comprising an electric motor mounted in the system and having a characteristic such that the speed of the motor varies inversely as the load applied thereto and a bob weight connected to the motor to be rotated eccentrically about a generally horizontal axis and control means to vary the power input to the electric motor to control the amplitude of the vibration of the system at said resonant frequency and thus to control the rate of flow of abrasive through the sieve to the nozzle.

Preferably the container is mounted on a resilient elongated member which is anchored at one end to a support. The container may be mounted at one end of a spring boom, the other end of which is anchored to the support. The boom may be made of wood for example, ash or Canadian fir; such wood is more resistant to fatigue than metal and has a low hysteresis loss.

The fundamental resonant frequency of the system is preferably between 200 and 800 cycles per minute.

An embodiment of the invention will now be described by way of example with reference to the accompanying drawings, in which:

FIGURE 1 is an elevation of a blasting machine embodying an invention partly in section and partly broken away to show the construction;

FIGURE 2 is a cross section through a blasting nozzle forming part of the blasting machine;

FIGURE 3 is a diagram showing the pneumatic circuit of the machine; and

FIGURE 4 is a circuit diagram showing the control apparatus for the machine.

Referring now to FIGURE 1, the machine comprises a base **10** at one side of which is mounted a fixed column **11**. The column is steadied in position by means of a web **12**. Bolted to the top of the column **11** is a boom **13**, one end of the boom being anchored between the top of the column and a cover plate **14** and being held in position by bolts **15**.

Mounted at the free end of the boom is a container indicated generally at **16**. The container comprises a cylindrical portion **17** which is bolted at its lower end to an inverted frusto-conical portion **18**. Secured in the top of the frusto-conical portion **18** is a perforated metal plate **19** from the center of which rises a tube **20** which opens at its lower end into the frusto-conical portion **18**. The top of the tube **20** is provided with a gauze **21** to prevent abrasive material from passing down the tube **20**.

Sandwiched between the perforated plate **19** and the lower edge of the cylindrical portion **17** is a nylon mesh sieve **22**, the edges of the sieve being clamped between complementary flanges at the top of the frusto-conical portion **18** and the bottom of the cylindrical portion **17**, the flanges being clamped together by bolts **23**.

The upper end of the container is provided with an inlet which has a spring loaded closure member **24** of substantially bell-shaped form. A frusto-conical housing **25** is secured to the top plate **26** of the container and spokes **27** in the housing **25** support a journal **28**. A vertical rod **29** is slidable in the journal **28** and is secured at its lower end to the closure member **24**. The rod **29** is provided with an operating knob **30** at its upper end and a spring **31** is interposed between the journal **28** and the knob **30**. The plate **26** is provided with a recess around the inlet in which is received an O-ring **32** which seals against the upper surface of the closure member **24** as shown in FIGURE 1.

The container is provided with a T-piece **33** at its lower end which provides an outlet. One side of the T-piece is connected to a discharge pipe **34** and the other side of the T-piece is connected to a compressed air line **35**. The line **35** is fed from a main air line **36** which branches at a T-piece **37** into the air line **35** and into another air line **38**. The air line **38** discharges into the top of the container through an elbow **39**.

Mounted on the container is a bracket **40** on which is bolted a series-wound electric motor **41** carrying, on its driving spindle **42**, an eccentric bob weight **43**. The motor is controlled by means of a circuit which will be described hereinafter.

Referring now to FIGURE 3, the pneumatic circuit of the machine will now be described. The machine includes a compressor **44** which feeds air into a line **45**, the air being arranged to pass through a desiccator **46** to dry the air. Although a compressor has been shown as forming part of the machine it will be appreciated that the machine could be supplied by an outside source of compressed air and would in fact probably be so connected when used in surroundings where a number of blasting machines were used and a central source of compressed air is provided.

The air line **45** feeds to a junction piece **47** from which leads off in one direction, the main air line **36** which feeds to the container **16** as has hereinbefore been described. The discharge pipe **34** passes through a pneumatically operated valve **48**, thence into a T-piece **49** and thence into an outlet pipe **50** which feeds the nozzle indicated generally at **51**.

Another pipe **52** leads from the junction piece **47** through a pneumatically operated valve **53** to the T-piece **49**. A further service pipe **54** leads from the junction piece **47** and branches at a T-piece **55** into branches **56** and **57**. The branch **56** leads to the valve **53** and the branch **57** leads to the valve **48**. Air flow through the branch **56** is controlled by a solenoid valve **58** and air flow through the branch **57** is controlled by a solenoid valve **59**.

Referring now to FIGURE 2, the nozzle indicated generally at **51** comprises a body **60** within which the outlet pipe **50** is received and is secured by means of an internal thread **61** in the body. Screwed into the end of the body **60** is a seal holder **62** in which is mounted a rubber seal **63**. A nozzle tube **64** has one end received in the seal **63** and is secured in position by means of a nozzle tube holder **65**. The holder **65** is threaded into the seal holder **62** and as the holder **65** is screwed into position it compresses the seal **63** which grips the nozzle tube **64**.

Turning now to FIGURE 4, this shows the control means for the machine. Power for a machine is taken

off the mains lines L1 and L2 and passes through a double pole mains switch S1. A fuse 66 is placed in line L1 and a warning light 67 is connected between the lines L1 and L2 to show when the machine is in operation. Once the main switch S1 has been closed, the operation of the machine is controlled by two further foot switches S2 and S3.

A rectifier bridge 67 is connected between the lines L1 and L2 and has output lines 68 and 69. Connected between the lines 68 and 69 is a further line 70 in which is the foot switch S2 and the coil of an operating relay R1.

Also connected between the lines 68 and 69 is a line 71 in which there is arranged in series a tapped resistor 72, a variable resistor 73 and a second tapped resistor 74. The line 75 tapped from the resistor 74 passes through a relay contact C1R1 of the relay R1 and through the motor 41 and a milli-ammeter 76a back to the line 69. Connected between the line 75 and the line 69 is a capacitor 76.

The switch S3 is connected in a line 77 which extends between the lines L1 and L2 and this line also contains the solenoid 58S for the solenoid valve 58. A further line 78 extends between the lines L1 and L2 and this line 78 contains a second contact C2R1 of the relay R1 and also the solenoid 59S of the solenoid valve 59. A line 79 in parallel with the solenoid 59S contains the coil of a time delay relay R2. A contact C1R2 is connected between the variable tap 80 of the variable resistance 73 and a line 81 leading to the junction between the resistors 73 and 74.

Operation of the machine is as follows, when the double pole switch S1 is closed, current flows through the rectifier bridge 67 and along the lines 68, 69 through the resistors 72, 73 and 74 and charges up the capacitor 76. If now it is desired to abrade a surface, the switch S2 is closed in the line 70 and this energises the relay R1, and thus closes the contacts C1R1 and C2R1. As a result of the closing of the contact C1R1 the capacitor 76 discharges through the motor 41 so that a surge of power passes through the motor and the latter starts to rotate, the surge assisting in overcoming the initial inertia of the bob weight 43. After the capacitor has discharged, the motor is supplied with voltage from the rectifier bridge 67 through the lines 68, the line 71, the resistors 72, 73 and 74, the line 75 the contact C1R1, the milli-ammeter 76a and the line 69 back to the bridge 67.

The closing of the contact C2R1 in the line 78 energises the solenoid 59S of the solenoid valve 59 and this allows air into the branch 57 thus opening the pneumatic valve 48 and allowing abrasive and air to pass down the discharge pipe 34 to the nozzle 51. Closing of the contact C2R1 also energises the relay R2 and after a predetermined time delay the relay R2 closes the contact C1R2 thus connecting the variable tap 80 to the junction between the resistors 73 and 74 so that variation of the position of the tap 80 will vary the current supplied to the motor 41 from the rectifier bridge 67. The tapped resistor 72 is pre-set to limit maximum power supply to the motor and the pre-set resistor 74 is set to limit the minimum power supplied to the motor. The maximum and minimum supplies are chosen in accordance with the requirements of the machine. The relay R2 is preferably set so that the contact C1R2 is closed approximately three seconds after the coil of the relay is energised.

Turning now to the operation of the boom and container, as the motor starts to rotate with the bob weight the free end of the boom will start to vibrate generally vertically and as the motor gathers speed the vibrations will increase. The boom 13, the container 16 and the motor 41 together with their associated brackets and parts attached to the boom form a system having a fundamental resonant frequency. The speed of the motor is so adjusted as to bring the system to vibrate at this fundamental resonant frequency. The motor and the boom then lock in what is known as a "dynamic couple," in this situation, the motor is rotating so that the bob weight executes the same number of rotary cycles as does the boom complete vibrations. That is to say the forces which are applied by the electric motor and bob weight tend to keep the system vibrating at its resonant frequency since the impulses given to the end of the boom are in phase with the vibrations executed by the boom. It has been found that if this condition is arrived at, small variations in the power applied to the motor will vary the amplitude of vibrations with no appreciable alteration in the speed of the motor. It is this discovery which is used in the present invention to control the amount of abrasive which is fed to the nozzle by varying the amplitude of vibration of the container. Once the motor has got to its desired speed, the power input thereto may be controlled by altering the variable tap 80 on the variable resistor 73 and the result may be metered through the milli-ammeter 76a.

When the container is vibrating at the desired frequency, the abrasive in the cylindrical portion 17 will pass through the sieve 22 and the perforated plate 19 into the frusto-conical portion 18. The rate at which the abrasive will flow through the sieve depends upon the amplitude of vibration of the container. The abrasive falls from the frusto-conical portion 18 into the T-piece 33 and the compressed air issuing from the pipe 35 entrains the abrasive and carries it down the discharge pipe 34, through the pneumatic valve 48, the T-piece 49, and the outlet pipe 50 to the nozzle 51. The material passes through into the nozzle tube 64 and is then directed on the article or surface to be abraded.

Since compressed air is supplied to both sides of the container both above and below the sieve the abrasive particles are not flowing downwardly against a current of air and therefore do not tend to get electrically charged and repelled. Moreover, the provision of the tube 20 allows breathing between the upper and lower portions of the container and reduces undesirable damping effects caused by the abrasive above the sieve tending to act as a piston.

When the abrading operation is finished the switch S2 is opened thus breaking the circuit through the relay R1 and opening the contacts C1R1 and C2R2. This stops the motor and de-energizes the solenoid 59S of the solenoid valve 59 thus cutting off the air supply to the pneumatic valve 48 and allowing this to close to prevent any further air and abrasive passing down the outlet pipe 50. If it is now desired to blow the abrasive away from the workpiece, the switch S3 is closed thus energising the solenoid 58S of the solenoid valve 58 and allowing air into the branch 56 to operate the pneumatic valve 53. The pneumatic valve 53 opens and allows air to pass down the pipe 52 to the T-piece 49 and then down the outlet pipe 50 to the nozzle 51 where the air is discharged from the nozzle tube 64 and is used to blow away any excess abrasive. When it is desired to resume the abrading operation, the switch S3 is opened thus de-energising the solenoid 58S closing the branch 56 and shutting the pneumatic valve 53. The switch S2 is then closed to start the motor and repeat the cycle of operations which has been described above.

The wood used for the boom must be of first quality, straight grained and well seasoned. The resonant frequency of the boom is proportional to its thickness if the width is retained constant. As mentioned above the system comprising the container, the boom and the motor should be designed to have a fundamental resonant frequency of between 200 and 800 vibrations per minute and a convenient value is 600 vibrations per minute.

The arrangement has the advantage that the motor will have a very long life if it is sealed against the ingress of grit. Due to the fact that the motor is rotating the bob weight in phase with the vibrations of the boom, the load on the bearings of the motor, which may be ball-bearings, is very small. Moreover, the speed of the motor is comparatively slow, these two features make for a long motor life.

The material in the desiccator **46** may be any conventional drying agent such as calcium chloride or silica gel. Alternatively the desiccator may include a condenser. If an absorbent material is used it should be changed regularly and if a condenser is used means should be provided to run off the accumulated condensate at frequent intervals. As mentioned above, although a compressor is shown forming part of the machine the machine may be constructed to be connected to a compressor and if the latter has a desiccator then the provision of a desiccator on the blasting machine will not be required.

The ratio of the cross-sectional areas of the nozzle tube **64** and the outlet pipe **50** should not be too small or else the abrasive material will settle out in the pipe **50** and may thus cause a blockage. Even if the pipe **50** is not blocked the abrasive material may flow through the pipe in a slow, solid stream with little or no blasting power.

Conveniently the rectifying bridge **67** is arranged to supply voltage at a pressure of 300 volts and the capacitor **76** may conveniently be of the order of 60 microfarads. The time delay relay R2 is provided so that full power is not immediately applied to the motor **41**. If full power were applied immediately the motor were started, the motor would tend to race and might well pass through the resonant frequency without forming a dynamic couple with the vibrations of the boom and locking in with the vibrations so that the movements of the bob weight are in phase with the vibrations of the boom.

It will be seen that the invention provides a blasting machine in which the amount of abrasive fed to the nozzle is easily controlled by means of a variable resistor, in the emboidment described the resistor **73**. Moreover the quantity can be controlled to a predetermined amount by calibrating the milli-ammeter **76***a* so that a setting on the milli-ammeter will correspond to a given amount of abrasive passing to the nozzle in a unit time.

What we claim then is:

1. A blasting machine including a blasting nozzle and means to supply abrasive to the nozzle, said means including a container for abrasive, a sieve in the container through which the abrasive passes as the container is vibrated, resilient means supporting the container for vibration, the container and the resilient means forming forming a system having a fundamental resonant frequency, driving means for applying power to the system to cause it to vibrate at or adjacent to its fundamental resonant frequency, said driving means comprising an electric motor mounted in the system and having a characteristic such that the speed of the motor varies inversely as the load applied thereto and a bob-weight connected to the motor to be rotated about a generally horizontal axis, control means to vary the power input to the electric motor to control the amplitude of the vibration of the system at said resonant frequency and thus to control the rate of flow of abrasive through the sieve and abrasive-conveying means connecting the container on the output side of the sieve to the nozzle.

2. A blasting machine according to claim **1**, including a support and a resilient elongated member which is anchored at one end to the support, the container being mounted on the member remote from the support.

3. A blasting machine according to claim **2** wherein the elongated member is a wooden boom.

4. A blasting machine according to claim **3** wherein the boom is made of a wood selected from the group consisting of ash and Canadian fir.

5. A blasting machine including a blasting nozzle and means to supply abrasive to the nozzle, said means including a support, a resilient boom having a free end and anchored at its other end to the support, a container for abrasive mounted on the boom remote from its anchorage to the support, a generally horizontal sieve in the container through which abrasive passes as the container vibrates in a generally vertical plane, the boom and the container forming a system having a fundamental resonant frequency, driving means for applying power to the system to cause it to vibrate at or adjacent to its fundamental resonant frequency, control means to vary the power input to the driving means to control the amplitude of vibration of the system at said resonant frequency and thus to control the rate of flow of abrasive through the sieve, and pneumatic abrasive-conveying means connecting the container on the output side of the sieve to the nozzle.

6. A blasting machine according to claim **5**, wherein the container comprises a chamber with an inlet for abrasive at the top thereof and an outlet at the bottom thereof, the sieve being arranged transverse of the chamber between the inlet and the outlet.

7. A blasting machine according to claim **6**, wherein a tube extends upwardly from the sieve through the abrasive resting on the sieve and communicates at its ends with the parts of the chamber above and below the sieve.

8. A blasting machine according to claim **7** including a gauze at the upper end of the tube to prevent the passage of abrasive down the tube.

9. A blasting machine including a blasting nozzle and means to supply abrasive to the nozzle, said means including a support, a resilient boom anchored at one end to the support, a container for abrasive mounted on the boom remote from its anchorage to the support, an inlet for abrasive at the top of the container, an outlet for abrasive at the bottom of the container, a generally horizontal sieve in the container between the inlet and the outlet, the sieve allowing passage of abrasive therethrough when the container is vibrated in a generally vertical plane, the boom and the container forming a system having a fundamental resonant frequency, driving means for applying power to the system to cause it to vibrate at or adjacent to its fundamental resonant frequency, control means to vary the power input to the driving means to control the amplitude of vibration of the system at said resonant frequency and thus to control the rate of flow of abrasive through the sieve, pneumatic abrasive-conveying means connecting the outlet of the container to the nozzle, and a pressure equalising conduit connected between the abrasive-conveying means and the upper end of the container between the inlet and the sieve.

10. A blasting machine according to claim **9** including a spring-loaded closure member in the chamber inlet operable against the spring loading to allow the feeding of abrasive into the container.

11. A blasting machine including a blasting nozzle and means to supply abrasive to the nozzle, said means including a support, a resilient boom anchored at one end to the support, a container for abrasive mounted on the boom remote from its anchorage to the support, a generally horizontal sieve in the container through which abrasive passes as the container vibrates in a generally vertical plane, the boom and the container forming a system having a fundamental resonant frequency, an electric motor mounted on the boom adjacent to the container and having a characteristic such that the speed of the motor varies inversely as the load applied thereto, a bob-weight connected to the motor to be rotated eccentrically about a generally horizontal axis, control means to vary the power input to the motor to control the amplitude of vibration of the system at said resonant frequency and thus to control the rate of flow of abrasive through the sieve, and pneumatic abrasive-conveying means connecting the container at the output side of the sieve to the nozzle.

12. A blasting machine according to claim **11**, wherein the motor is a series-wound electric motor.

13. A blasting machine according to claim **12** wherein the bob weight is mounted directly on the driving spindle of the electric motor.

14. A blasting machine according to claim 11, wherein the control means includes starting means arranged to provide an initial surge of power through the motor to overcome the initial inertia of the bob weight.

15. A blasting machine according to claim 14, wherein the starting means includes a capacitor which is charged when power is applied to the machine and which discharges through the motor to provide said initial surge of power.

16. A blasting machine according to claim 11, wherein the control means comprises a variable resistor and a time-delay relay, the whole of the resistor initially being in the motor circuit upon starting the machine but one end of the resistor being shorted to the variable tap thereof by the time-delay relay after a predetermined time has elapsed from the application of power to the machine, the variable tap then controlling the power fed to the motor.

17. A blasting machine including a blasting nozzle and means to supply abrasive to the nozzle, said means including a support, a resilient boom anchored at one end to the support, a container for abrasive mounted on the boom remote from its anchorage to the support, a generally horizontal sieve in the container through which abrasive passes as the container vibrates in a generally vertical plane, the boom and the container forming a system having a fundamental resonant frequency of between 200 and 800 cycles per minute, driving means for applying power to the system to cause it to vibrate at or adjacent to its fundamental resonant frequency, control means to vary the power input to the driving means to control the amplitude of vibration of the system at said resonant frequency and thus to control the rate of flow of abrasive through the sieve, and pneumatic abrasive-conveying means connecting the container at the output side of the sieve to the nozzle.

18. A blasting machine including a blasting nozzle and means to supply abrasive to the nozzle, said means including a support, a resilient boom anchored at one end to the support, a container for abrasive mounted on the boom remote from its anchorage to the support, a generally horizontal sieve in the container through which abrasive passes as the container vibrates in a generally vertical plane, the boom and the container forming a system having a fundamental resonant frequency of between 200 and 800 cycles per minute, an electric motor mounted on the boom adjacent to the container and having a characteristic such that

the speed of the motor varies inversely as the load applied thereto, a bob weight connected to the motor to be rotated eccentrically about a generally horizontal axis, control means to vary the power input to the motor to control the amplitude of vibration of the system as said resonant frequency and thus to control the rate of flow of abrasive through the sieve and pneumatic abrasive-conveying means connecting the container on the output side of the sieve to the nozzle.

19. A blasting machine including a blasting nozzle and means to supply abrasive to the nozzle, said means including a support, a resilient boom anchored at one end to the support, a container for abrasive mounted on the boom remote from its anchorage to the support, an inlet for abrasive at the top of the container, an outlet for abrasive at the bottom of the container, a generally horizontal sieve in the container between the inlet and the outlet, the sieve allowing passage of abrasive therethrough when the container is vibrated in a generally vertical plane, the boom and the container forming a system having a fundamental resonant frequency of between 200 and 800 cycles per minute, an electric motor mounted on the boom adjacent to the container and having a characteristic such that the speed of the motor varies inversely as the load applied thereto, a bob weight connected to the motor to be rotated eccentrically about a generally horizontal axis, control means to vary the power input to the motor to control the amplitude of vibration of the system at said resonant frequency and thus to control the rate of flow of abrasive through the sieve, pneumatic abrasive-conveying means connecting the outlet of the container to the nozzle, and a pressure equalising conduit connected between the abrasive-conveying means and the upper end of the container between the inlet and the sieve.

References Cited by the Examiner

UNITED STATES PATENTS

671,410	4/1901	Warren	51—12
2,433,684	12/1947	Damond	222—196 X
2,618,109	11/1952	Miller	51—319
2,628,456	2/1953	Berg	51—8
2,725,684	12/1955	Crowe	51—8
3,149,445	9/1964	Nolan	51—319

LESTER M. SWINGLE, *Primary Examiner.*