(No Model.)

D. B. VAN DORN.

FENCE.

No. 261,281. Patented July 18, 1882.

Fig. 1.

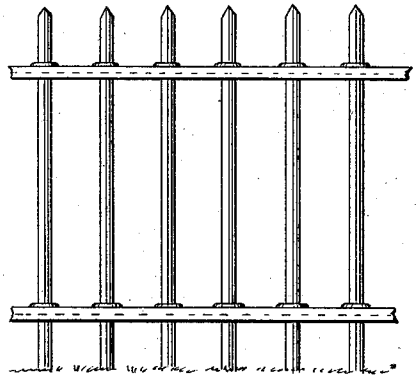

Fig. 2.

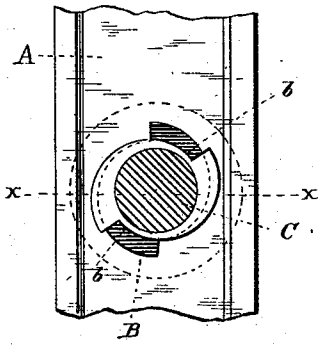

Fig. 3.

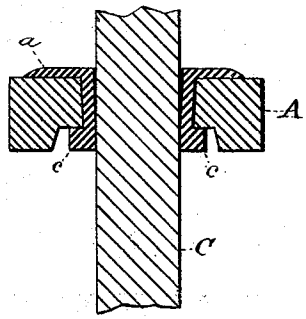

Fig. 6.

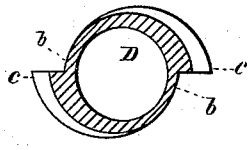

Fig. 4.

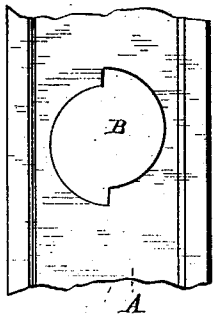

Fig. 5.

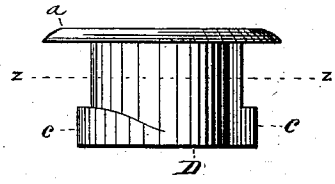

WITNESSES

Jno. Orwell Jr.

S. G. Nottingham

INVENTOR

Dwight B. Van Dorn

By Liggett & Liggett

ATTORNEYS

N. PETERS, Photo-Lithographer, Washington, D. C.

UNITED STATES PATENT OFFICE.

DWIGHT B. VAN DORN, OF CLEVELAND, OHIO.

FENCE.

SPECIFICATION forming part of Letters Patent No. 261,281, dated July 18, 1882.

Application filed April 29, 1882. (No model.)

To all whom it may concern:

Be it known that I, DWIGHT B. VAN DORN, of Cleveland, in the county of Cuyahoga and State of Ohio, have invented certain new and useful Improvements in Fences; and I do hereby declare the following to be a full, clear, and exact description of the invention, such as will enable others skilled in the art to which it pertains to make and use the same.

My invention relates to iron fences; and it consists in a peculiarly-constructed bushing for holding the pickets in place on the fence-rail, as will be hereinafter fully set forth and claimed.

In the drawings, Figure 1 is a view in elevation of a fence embodying my invention. Fig. 2 is a plan view of the under side of the rail, and also an end view of my bushing. Fig. 3 is a vertical cross-section taken through the rail and picket. Fig. 4 is a plan view of a portion of a fence-rail, showing the peculiar form of the holes through which the bushing passes. Fig. 5 is a view in elevation of my bushing. Fig. 6 is a section on the line *z z* of Fig. 5.

A is a fence-rail of any suitable construction, which is provided with a series of holes, B, of the shape shown in Fig. 4, for the passage of the bushings D.

C C are the pickets.

D is my bushing, preferably of yielding material, and formed as shown in Figs. 2 and 5 of the drawings—viz., with a head portion, *a*, and body portion *b*, said body portion being provided with two inclined lugs, *c c*, which project out from the body portion *b* near its lower end. These lugs *c c* engage with the under side of the rail A, as shown in Fig. 2, whereby it is locked in place. It will be noticed also that the body *b* of the bushing D is made cam-shaped, as shown by dotted lines, Fig. 2, and that the hole B in the rail A is so formed that when the bushing D is revolved in the direction of the arrow, Fig. 2, it is compressed and acts to grasp the picket, as shown in section, Fig. 3. The inclined lugs *c c* act to hold the bushing down in place in the rail, (see Fig. 3,) and thus the picket is held securely in place in the rail A.

The bushing D may be made of metal, if desired, and I do not limit myself to any material for its manufacture.

What I claim is—

1. The combination, with a fence-rail having a cam-shaped hole, of a cam-shaped bushing adaped to fit over a picket, and by engaging with the sides of the hole in the rail to grasp the picket and hold it in place in the said rail, substantially as shown and described.

2. In a fence, the combination, with the rail having a hole, B, and with a picket, C, of a bushing, D, provided with inclined lugs, *c c*, substantially as set forth.

In testimony whereof I have signed my name to this specification in the presence of two subscribing witnesses.

DWIGHT B. VAN DORN.

Witnesses:

W. E. DONNELLY,

JNO. CROWELL, Jr.