Oct. 11, 1949. F. BACKHUS 2,484,668

SAFETY MECHANISM FOR PREBOARDING MACHINES

Filed Aug. 25, 1947 3 Sheets-Sheet 1

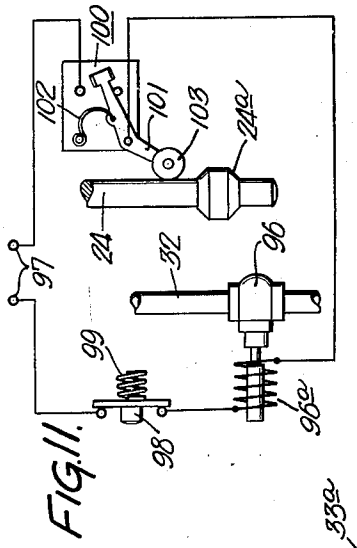

FIG. 11.

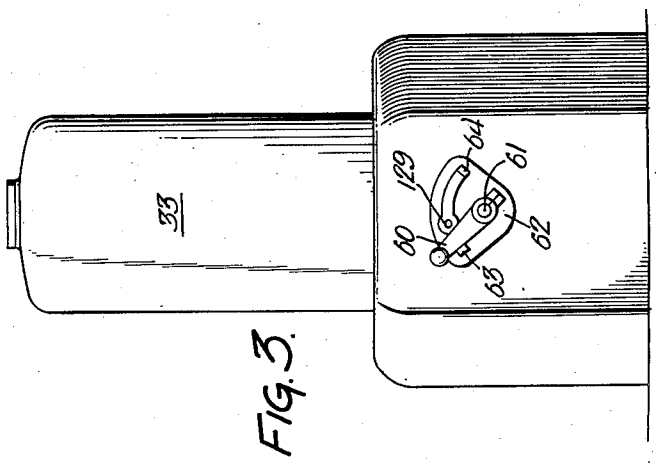

FIG. 3.

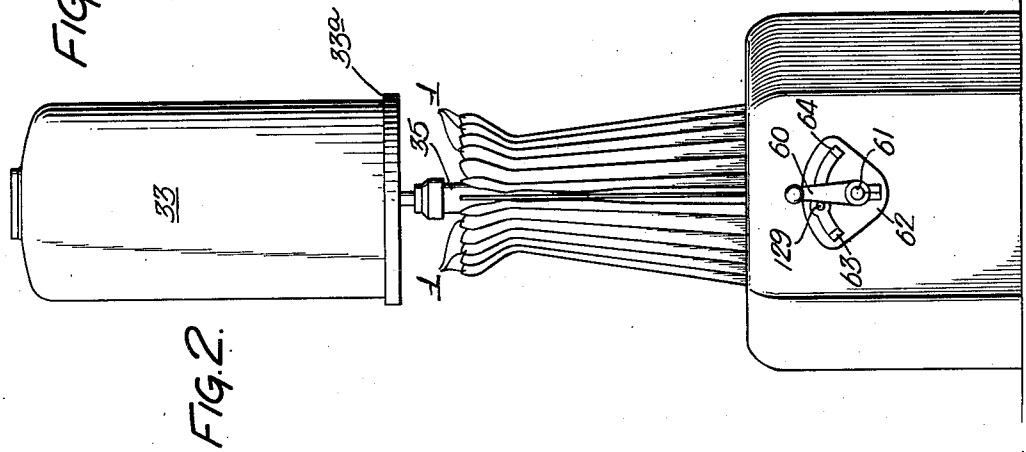

FIG. 2.

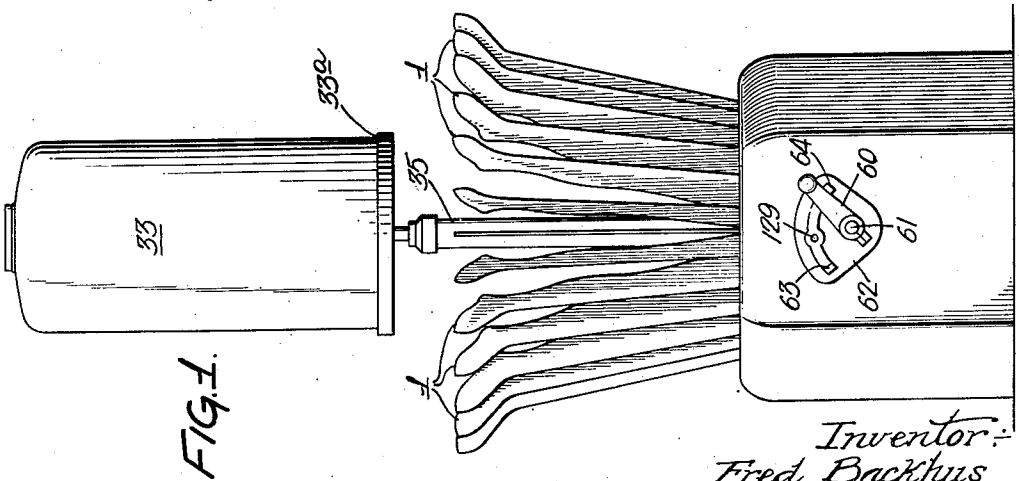

FIG. 1.

Inventor:
Fred Backhus
by his Attorneys
Howson & Howson

Oct. 11, 1949. F. BACKHUS 2,484,668

SAFETY MECHANISM FOR PREBOARDING MACHINES

Filed Aug. 25, 1947 3 Sheets-Sheet 2

FIG. 5.

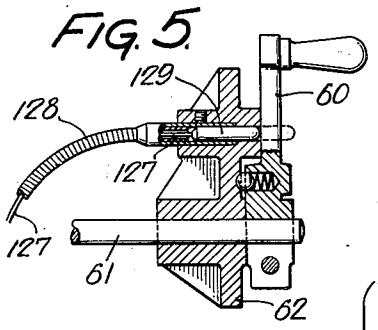

FIG. 4.

Inventor:
Fred Backhus
by his Attorneys
Howson & Howson

Oct. 11, 1949. F. BACKHUS 2,484,668

SAFETY MECHANISM FOR PREBOARDING MACHINES

Filed Aug. 25, 1947 3 Sheets-Sheet 3

FIG. 6.

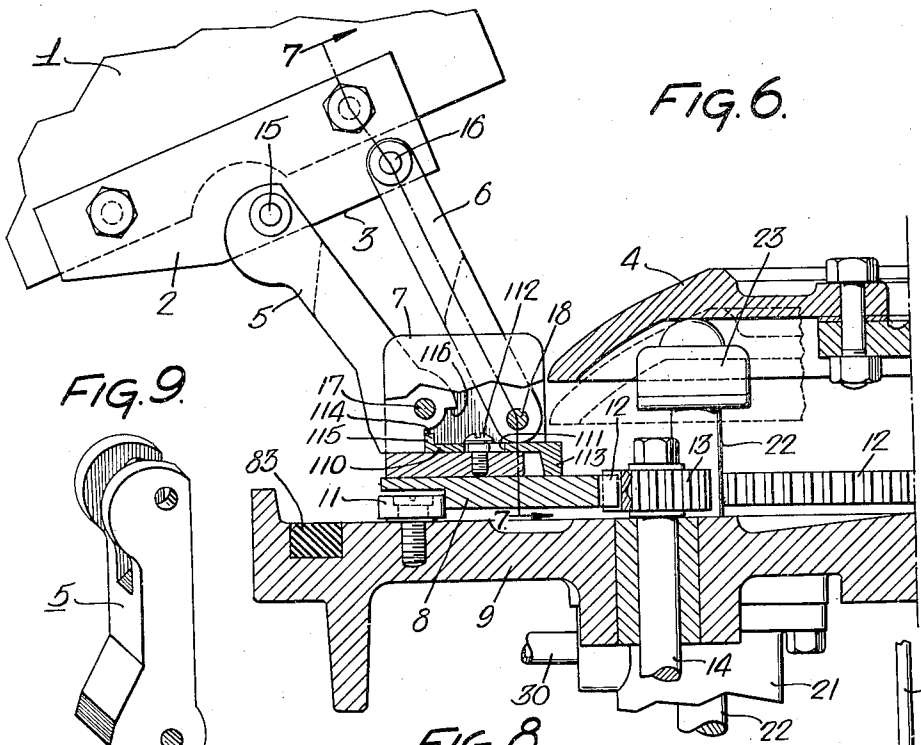

FIG. 9.

FIG. 8.

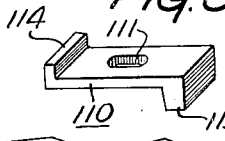

FIG. 7.

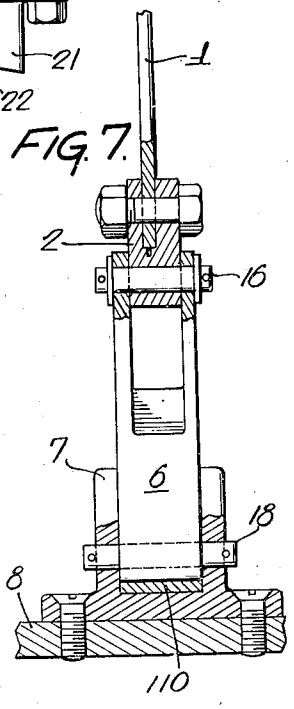

FIG. 10.

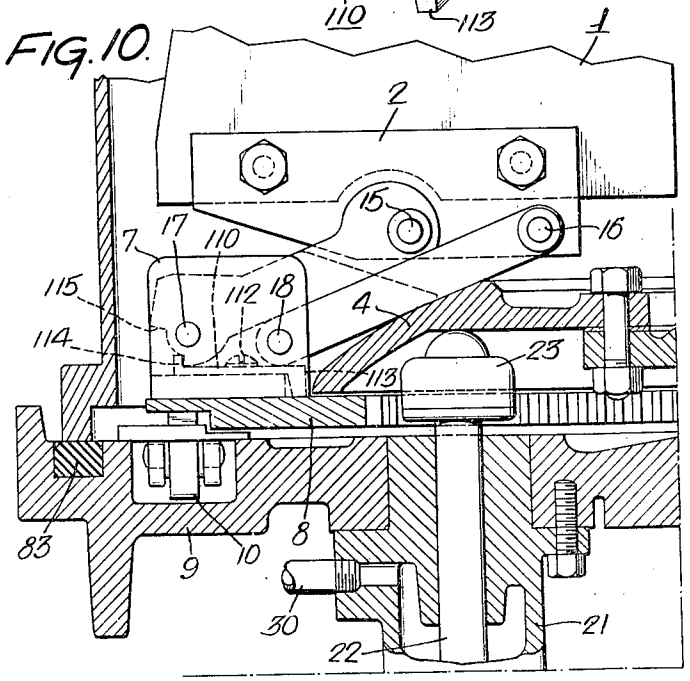

Inventor:
Fred Backhus
by his Attorneys
Howson & Howson

Patented Oct. 11, 1949 2,484,668

UNITED STATES PATENT OFFICE

2,484,668

SAFETY MECHANISM FOR PREBOARDING MACHINES

Fred Backhus, Carlstadt, N. J., assignor to Proctor & Schwartz, Inc., Philadelphia, Pa., a corporation of Pennsylvania

Application August 25, 1947, Serial No. 770,364

20 Claims. (Cl. 223—76)

1

This invention relates to new and useful improvements in preboarding machines commonly used in the processing of nylon stockings of both the flat knit full fashioned type and the circular knit seamless type. More particularly the present invention relates to new and useful improvements in preboarding machines of the type described in United States Patent No. 2,419,-645 dated April 29, 1947.

Nylon stockings, after structural completion, and usually before dyeing and finishing, are initially placed on individual forms to receive a setting treatment wherein the stockings are caused to conform to and permanently acquire the shape and size of these initial forms. After the setting treatment, the stockings are stripped from the initial forms to be run through the usual hosiery finishing process which includes the placing of the stockings on other individual forms for final drying.

In preboarding machines of the type with which the present invention is concerned, a plurality of the initial forms are respectively arranged for relative pivotal movement in vertical planes radiating from a common vertical axis so that the initial forms with stockings thereon may be closely nested, to be enclosed by a vertically movable dome arranged with its axis coinciding with the common axis from which the vertical planes of operation of the forms radiate.

The vertically movable dome is adapted to be lowered around the nested forms until the open base surface of the dome makes contact with a horizontal surface on the base of the machine, above which the forms project. A fluid pressure seal is formed between the base surface of the dome and the base surface of the machine, after which the stockings on the forms are subjected to the setting process which includes the entrance into the dome of steam under a predetermined pressure.

After the stockings have been exposed to the setting treatment for a predetermined length of time, the pressure fluid is evacuated from the dome and the latter is raised to an extent where the open base surface of the dome assumes a plane above the upper ends of the nested forms.

The nested forms are then caused to swing outwardly, about pivot points located adjacent the lower ends of the forms or boards, in their respective radial planes, to spread the forms apart laterally with respect to each other to facilitate stripping of the treated stockings from the individual forms and the placing of a new group of stockings thereon.

2

Outward swinging of the forms is effected by a common actuator ring disposed concentrically with respect to the axis from which the hosiery boards or forms radiate and is operable upwardly, thereby actuating the nested forms about their pivot points.

After the individual forms have been swung outwardly, the machine operator strips the treated stockings from the radially spread forms and places a new group of stockings thereon after which, the forms are swung inwardly manually by the operator preparatory to treating the new group of stockings.

Before the forms with the new group of stockings thereon are swung inwardly, the actuator ring is moved from its maximum high position to a position intermediate that position and the maximum low position of the ring. The operating ring remains in this intermediate position while the operator manually swings the reclothed forms inwardly of the machine and by the time the last of the complement of hosiery laden forms has been swung inwardly into engagement with a common operating ring in its intermediate position, the entire complement of forms has become completely quiescent. The operating ring then is lowered to its maximum low position, causing all of the forms simultaneously to descend gravitationally and uniformly in their individually radial planes until the maximum low position of the ring is attained and the forms are disposed in closely nested relation. By moving the actuator ring first to an intermediate position and then to its maximum low position, movement of the stocking forms as they descend into their final nested position is effectively controlled and damage to the stockings on the forms by accidental contact between adjacent forms as they are swung into their final nesting relation is eliminated.

In preboarding machines of the type described, it occasionally happens that the operator fails inadvertently to swing one or more of the stocking forms inwardly onto the actuator ring and proceeds to lower the dome with such form or forms remaining in the outward or spread position thereof. In their spread position, the stocking forms lie in the path of downward movement of the dome and consequently, in the event that all of the forms are not swung inwardly clear of downward movement of the dome, the latter will strike the forms causing damage thereto as well as to the dome and possibly other parts and mechanisms of the machine.

With the foregoing in mind, the present invention has for its object the provision in a preboard-

ing machine of the type described of mechanism operable automatically to prevent the operator of the machine from lowering the dome in the event that one or more of the stocking forms is in the outward or spread position thereof.

Another object of the invention is to provide mechanism as set forth which is operable to prevent movement of the actuator ring to its maximum low position and thereby preclude lowering of the dome of the machine in the event that one or more of the stocking forms remains in the outward or spread position thereof.

Another object of the present invention is to provide novel mechanism, as set forth, which includes means associated with each of the hosiery forms operable in the outward or spread position thereof to be disposed in the path of movement of the actuator ring and preclude movement thereof from its intermediate position to its maximum low position and subsequent lowering of the dome.

A further object of the present invention is to provide a novel safety mechanism for preboarding machines, as set forth, which is positive and foolproof in operation and use.

These and other objects of the invention and the various features and details of the construction and operation thereof are hereinafter set forth and described with reference to the accompanying drawings, in which

Fig. 1 is an elevational view showing a preboarding machine of the present invention with the dome raised and the stocking forms disposed in the outward or spread position thereof;

Fig. 2 is a view similar to Fig. 1 showing the stocking forms nested inwardly and seated upon the actuator ring in the low position thereof previously mentioned;

Fig. 3 is a view similar to Figs. 1 and 2 showing the dome in the lowered position thereof in which it is disposed during processing of stockings on the nested forms;

Fig. 4 is an enlarged fragmentary sectional view vertically through a preboarding machine embodying the present invention showing the same, with the forms nested and the actuator ring in its low position, in conjunction with safety mechanism of the present invention in association with a schematic arrangement of a hydraulic system for actuating the several parts of the machine;

Fig. 5 is an enlarged sectional view taken on line 5—5 of Fig. 4;

Fig. 6 is an enlarged fragmentary sectional view showing the actuator ring in its maximum elevated position and the stocking forms in the full outward or spread positions thereof, the intermediate position of the actuator ring being shown in dotted lines;

Fig. 7 is an enlarged fragmentary sectional view taken on line 7—7 of Fig. 6;

Fig. 8 is a detached perspective view of a latch member that is associated with each of the stocking forms and operates to prevent movement of the actuator ring to its maximum low position in the event one or more stocking forms are not swung inwardly and positioned against the actuator ring in the intermediate position thereof;

Fig. 9 is a detached enlarged perspective view of one of the link elements which pivotally support each stocking form with respect to the machine;

Fig. 10 is an enlarged fragmentary sectional view similar to Fig. 6 but showing the actuator ring in its maximum low position and the stocking forms in their final nested position thereon; and

Fig. 11 is a diagrammatic view of a portion of a control means embodied in the operating mechanism of the machine.

Referring now to the drawings, and more particularly to Figs. 4, 6 and 10 thereof, the leg portions of the stocking forms 1 are each provided with a camming plate 2 which has a lower inner edge 3 adapted to be engaged by the vertically movable common actuator or operating ring 4. The plates 2 are connected by links 5 and 6 to stationary pivot blocks 7 mounted upon an annular supporting member or the like 8 which is rotationally mounted or supported upon the base 9 of the preboarding machine, for example, by means of rollers 10 and guides 11. The circular member 8 has gear teeth 12 formed on its inner periphery and is rotationally driven by a spur gear 13 meshing therewith and mounted on a shaft 14 which is driven from any source of rotational power (not shown).

It will be noted that the links 6 are relatively longer than the links 5 and that the pivots 15 and 16 on the plates 2 are spaced apart a greater distance than the pivots 17 and 18 on the blocks 7; whereby the base ends of the forms 1 are bodily moved radially outward, by the ring 4, while the upper foot portions of the forms swing outwardly on arcs complementary to the arcs followed by the wider spaced pivots 15 and 16 of the links 5 and 6 about the closer spaced pivots 17 and 18 on the blocks 7.

The operating ring 4 is actuated vertically by a plurality of pistons 20 operating within cylinders 21. Each of the pistons has a piston rod 22 which extends vertically upward through the end of its cylinder 21 and the base 9 of the machine, and each rod 22 is provided with a head 23 that is adapted to engage against the underside of the operating ring 4. Also connected to one of the pistons 20 and projecting vertically downward exteriorly of its cylinder 21 is a rod 24, the purpose for which will be set forth hereinafter. The pistons 20 are actuated upwardly by fluid pressure admitted to their cylinders 21 through pipes 25 to which pressure fluid is supplied in turn by a pipe 26 through a piston-type valve 27 containing a piston 28 slidable therein and normally biased by a spring 29 to the position shown in Fig. 4. The upper ends of the cylinders 21 are connected by pipes 30 to a sump 31, and the valve 27 likewise is connected to said sump 31 by a pipe 32.

The dome 33 is raised by means of a piston 34 slidable within a cylinder 35 which extends coaxially of the preboarding machine. Pressure fluid to raise the piston 34 is admitted to the cylinder 35 at the lower end thereof through a pipe 36 which has its other end connected to the valve 27 and normally closed by the piston 28 therein acting under the influence of the spring or bias 29. Intermediate its ends, the pipe 36 is connected by a branch 37 to a control valve 38 of the piston type. The branch 37 connects with the valve 38 centrally thereof and the opposite ends of the said valve 38 are connected respectively by means of pipes 39 and 40 to opposite sides of a four-way rotary valve 41. The other ports of the four-way valve 41 are connected, respectively, by pipes 42 and 43 to the sump 31 and a rotary fluid pump 44, which may be suitably driven, for example by a motor 45. The intake of the rotary pump 44 is connected by

a pipe 46 to the aforesaid sump 31 and a by-pass 47 is provided to said sump from the pipe 43 which leads from the discharge of the pump 44 to the four-way valve 41.

The movable element 50 of the four-way valve 41 is provided with arcuate passages 51 and 52 therein operable in various rotary positions of element 50 to connect the pipes 39 and 40 selectively to the pipes 42 and 43 as the case may be. Rotation of the element 50 of the four-way valve 41 is effected in the illustrated embodiment of the invention by means of a manually operated handle 60 which is fixed on the outer end of a shaft 61 that is rotationally mounted in a sector plate or the like 62 having projecting stops 63 and 64 which operate to confine movement of the handle 60 within predetermined fixed limits. The shaft 61 operates through a link 65, rod 66, bell crank 67, rod 68 and link 69 on the shaft of the valve element 50 to control rotational movement of the latter.

In this connection, it is to be pointed out that the described connections between the manually operable handle 60 and the valve element 50 are such that in the position of the handle 60 shown in Fig. 1 of the drawings, the position of the valve element 50 is such that the passage 51 therein interconnects pipes 40 and 43, while the passage 52 interconnects pipes 39 and 42; and in the central or intermediate position of the handle 60, the valve element 50 is positioned as shown in Fig. 4 of the drawings so that all intercommunication between the pipes 39, 40, 42 and 43 is completely shut off; while in the position of the handle 60 shown in Fig. 3 of the drawings, the position of the valve element 50 is such that the passage 51 therein interconnects pipes 40 and 42, and the passage 52 therein interconnects the pipes 43 and 39.

Accordingly, and assuming that the machine and its several parts are in the condition shown in Fig. 3 of the drawings, and that a stocking processing operation has been completed, the treating fluid is exhausted from the interior of the dome 33 and the operator manually actuates the handle 60 to the right-hand position shown in Fig. 1 of the drawings against the stop 64, thereby positioning the element 50 of the valve 41 so that the pipe 43 is connected through the passage 51 with the pipe 40 and the pipe 39 is connected through the passage 52 with the pipe 42 leading to the sump 31. Fluid pressure at the left-hand end of the piston 38a in the valve 38 is thus exhausted to the sump 31 while pressure fluid discharged by the continuously operating pump 44 is introduced into valve 38 at the right-hand side of the piston therein, thereby actuating said piston to the left-hand position thereof shown in Fig. 4 of the drawings.

Connected to the piston of the valve 38 is a rod 70 which projects outwardly endwise of the valve and carries at its free end a cam member 71 having an inclined face 72 in contact with a cam roller 73 mounted in a stirrup-like member 74 that is secured at the lower end of a depending rod connection 75. The rod connection 75 at its upper end is secured to a cross-head or the like 76 having a central hub portion that is slidable vertically upon the dome piston cylinder 35 and is provided with radially extending arms 77 having laterally projecting pins 78 therein that slidably engage slots 79 in the inner ends of C-shaped clamp members 80. These clamps 80 are pivotally mounted at 81 circumferentially of the base of the machine and include end portions 82

which operate to engage downwardly on the bottom flange portion 33a of the dome and clamp the same securely in fluid tight relation against a gasket 83 secured in the peripheral portion of the machine base 9. The cross-head member 76 and its associated rod connection 75, stirrup 74 and roller 73, normally are biased by means of a spring or the like 84 to the upper or raised position, shown in Fig. 4, in which the clamps 80 are disengaged from the flange 33a of the dome.

By this construction and arrangement, when the manually operable handle 60 is moved into the position shown in Fig. 1 of the drawings to position the valve 41 so as to cause pressure fluid to flow from the pump 44 through pipes 43 and 40 to the valve 38 thus actuating its piston to the left-hand position shown in Fig. 4, as previously described, the cam 71 likewise is moved to the left with respect to Fig. 4, thus causing the cross-head 76 to be moved vertically upward by the spring 84 with resulting disengagement of the clamps 80 from the bottom flange 33a of the dome 33, thereby releasing the latter so that it can be raised.

Actuation of the piston 38a to the position shown in Fig. 4 also causes pressure fluid to flow from the valve 38 through the branch 37 and pipe 36 to the dome cylinder 35 thereby actuating the piston 34 and dome 33 upwardly to the full raised position thereof.

Means are provided for locking the piston 38a of the valve 38 in the position to which actuated during the period that the dome 33 has its bottom flange portion 33a elevated out of sealing engagement with the gasket 83 in the base 9 of the machine. In the illustrated embodiment of the invention this is accomplished by providing a vertically slidable rod or plunger 90 having its upper end disposed for engagement by the bottom flange 33a of the dome, as shown in Fig. 4, and its lower end disposed in engagement with the outer end portion of a generally Z-shaped lever 91 which is pivotally mounted at 92 adjacent its other end, and has suitable connection with a latch member 93 that is vertically slidable into and out of the path of the right-hand end portion of the cam 71. The lever 91 normally is urged in the counter-clockwise direction about its pivot 92 by means of a spring 94. The construction and arrangement generally of the plunger 90, and lever 91 and latch 93 is such that, when the dome 33 is in its fully lowered position, the flange 33a thereof actuates the plunger 90 downwardly thereby rotating the lever 91 clockwise against its spring bias 94, thereby raising the latch 93 out of the path of the cam block 71. On the other hand, just as soon as the dome 33 starts to move upwardly and the bottom flange 33a thereof moves out of engagement with the sealing gasket 84, the plunger 90 is permitted to move upwardly, thus allowing the lever 91 to move counter-clockwise about its pivot under the influence of its spring 94 and thereby actuating the latch member 93 downwardly into the path of the cam block 71 to lock the piston 38a in the left-hand position shown.

During elevation of the dome as described, the piston 28 of valve 27 is retained in the position shown in Fig. 4 against the pressure of the fluid in pipe 36 by means of the aforesaid spring bias 29, with the result that flow of pressure fluid in line 36 to the ring elevating cylinders 21 is prevented during elevation of the dome.

When the piston 34 and dome 33 have been

actuated upwardly to the full limit of movement by the admission of pressure fluid into the cylinder 35 through the pipe 36, as previously described, the pressure of the fluid in the system continues to build up or is increased to a point where the piston 28 of the valve 27 is actuated to the left with respect to Fig. 4 against the bias of its spring 29, thereby admitting pressure fluid through the valve 27 and pipe 26 to the pipes 25 and cylinders 21. Admission of pressure fluid to the cylinders 21 at the underside of the pistons 20 causes the latter to be operated upwardly together with their piston rods 22 and head elements 23, thereby actuating the operating ring 4 upwardly into the solid line position shown in Fig. 6 of the drawings, and in turn causing the stocking forms 1 to be actuated outwardly by the ring into the diverging or spread relationship shown in Fig. 1 of the drawings.

In this position of the forms 1, the processed stockings are removed therefrom and a group of new stockings to be processed are placed on the forms. During this stripping or reclothing of the forms 1, or when it has been completed, the operator moves the manually operable control handle 60 from the position shown in Fig. 1 of the drawings to the intermediate or central position thereof shown in Figs. 2 and 4. Actuation of the handle 60 into this intermediate position operates to position the element 50 of the four-way valve 41 as shown in Fig. 4 so that intercommunication between the several pipes 43, 40, 39 and 42 is completely cut off. The pressure fluid discharged by the pump 44 thus no longer is acting upon the piston 28 of the valve 27 and the latter is returned by its spring 29 to the position shown in Fig. 4 of the drawings against the static fluid head in the cylinder 35 and pipe 36. Movement of the valve piston 28 to the position shown in Fig. 4 opens a by-pass 26*a* from the pipe 26 through the valve 27 and pipe 32 to the sump 31 so that pressure fluid in the cylinders 21 will bleed therefrom back through the pipes 25 and valve 27 to the sump 31, thereby causing the pistons 20 to be lowered under the force of a spring 95 acting on the actuator ring of and causing said actuator ring 4 likewise to move downwardly.

Provision is made for arresting downward movement of the actuator ring 4 in an intermediate position between the maximum high and maximum low positions thereof. Referring to Figs. 4 and 11 of the drawings, this is accomplished in the present instance by providing in the pipe 32 leading from the valve 27 to sump 31 a normally open solenoid-operated valve 96. The solenoid 96*a* of this valve is electrically connected across a pair of line terminals 97 by means of an electrical circuit which includes a manually operable pushbutton type switch 98 that normally is biased to closed position by means of a spring 99, and a mechanically operable switch 100 having a pivoted contact arm 101 which normally is held in open circuit relation by means of a spring 102, the said arm 101 carrying a roller 103 which is adapted to ride along the aforesaid plunger 24. The plunger 24 has a projection 24*a* thereon disposed in the path of the roller 103 and predeterminedly positioned longitudinally of the plunger 24 to engage said roller and actuate the arm 101 in the counterclockwise direction at the proper time, thereby closing the switch 100 and energizing the solenoid to close valve 96. Closure of valve 96 precludes further bleeding of pressure fluid from the cylinders 21 through the valve 27 to the sump 31, and hence further downward movement of the pistons 20 and actuator ring 4 is prevented and the latter is thus retained in the intermediate position shown, for example, in dotted lines in Fig. 6 of the drawings.

With the actuator ring 4 in its intermediate position, the reclothed forms 1 are manually swung inwardly by the operator of the machine so that the edges 3 of the plates 2 thereof engage the declining peripheral surface of the ring 4 and are supported thereby. With all of the forms 1 swung inwardly and resting upon the actuator ring 4 in the intermediate position thereof, the operator pushes switch 98 thereby deenergizing solenoid 96*a* and opening valve 96 to cause the pistons 20 and ring 4 to move downwardly from said intermediate position to the maximum low position thereof under the weight of the ring and the reclothed forms supported thereby.

The handle 60 may now be manually actuated by the operator into the left-hand position thereof shown in Fig. 3 of the drawings, thereby positioning the element 50 of the valve 41 so that its passage 51 interconnects the pipes 40 and 42, while the passage 52 is disposed to interconnect the pipes 43 and 39. Interconnection of the pipes 40 and 42 in this manner causes the pressure fluid in the dome piston cylinder 35 to bleed therefrom through pipe 36, valve 38, pipes 40 and 42 to the sump 31, with the result that the piston 34 and dome 33 will move downwardly under the influence of gravity. Downward movement of the dome 33 continues until its bottom flange portion 33*a* moves into sealing engagement with the gasket 83 in the base 9 of the machine. Just prior to moving into engagement with the gasket 83, the dome bottom flange 33*a* actuates the plunger 90 downwardly, thereby in turn actuating the lever 91 clockwise about its pivot 92 and moving the latch member 93 vertically upward out of the path of the cam block 71, all against the action of spring 94.

Upon movement of the latch 93 out of the path of cam block 71, pressure fluid from the pump 44, acting on the left-hand end of the piston 38*a* of valve 38, will actuate said piston to its extreme right-hand position (Fig. 4), thereby actuating the cam block 71 to the right and causing it to actuate the roller 73 and its associated stirrup 74, rod connection 75 and cross-head 76 vertically downward against the tension of the spring bias 84. Actuation of the cross-head 76 downwardly, as described, operates to actuate the clamps 80 about their pivots 81 so that their ends 82 engage inwardly and downwardly upon the bottom flange 33*a* of the dome 33 and secure the same in sealing engagement upon the aforesaid gasket 83. Treating fluid may then be caused to flow into the interior of the dome 33 for treatment of stockings therein.

As previously stated herein, it is desirable that provision be made for preventing lowering of the dome 33 in the event that the operator inadvertently fails to swing one or more of the forms inwardly from its outwardly or spread position. In accordance with the present invention, this may be accomplished, for example, by providing in association with each of the stocking forms 1 a latch member 110 (see Fig. 8) which is mounted upon the stationary pivot blocks 7 for sliding movement in a radial direction within predetermined limits determined by the length of a slot 111 therein through which passes a screw 112,

The forward or inner end of each latch 110 has a depending flange or foot portion 113, the under surface of which is adapted to slidably rest upon the upper surface of the rotationally mounted annular support member 8. On the other hand, the outer or rearward end of each latch member 110 is provided with an upstanding lug or portion 114 which is disposed for engagement by relatively spaced abutments 115 and 116, respectively, provided at the lower end of the link 5 and arcuately spaced 90° apart with respect to the axis of the lower pivot 17 of the link.

The construction and arrangement of the latch members 110 and the spaced abutments 115 and 116 on the links 5 are such that, as the forms 1 move into their outward or spread relationship, the abutment 115 of the link 5 engages the lug 114 of the latch members 110, thereby actuating the latter radially inward and disposing the inner end thereof into the path of vertical movement of the form actuator ring 4 in a manner such that, so long as any one latch member 110 is disposed in the path of the actuator ring 4, the latter cannot be moved to its maximum low position shown in Fig. 10 of the drawings. The abutment 116, on the other hand, is disposed and arranged so that as the forms 1 are swung inwardly from their outwardly or spread positions the aforesaid lugs 114 of the latch members 110 are engaged and actuated radially outward so that the inner end of the latch member is removed or withdrawn from the path of vertical travel of the actuator ring 4 and the latter is free to continue its downward movement to its maximum low position.

Cooperatively disposed in engagement with the lower end of the previously mentioned plunger 24 that is carried by one of the pistons 20 is an arm 120 that is pivotally mounted at one end, as indicated at 121, to a fixed post or standard 122 and has its other end interconnected by means of a spring 123 to a bracket 125 that is fixed to a depending fixed post or standard 126, the arrangement being such that the spring 123 normally urges the arm 120 in the clockwise direction about its pivot 121 with the resulting force being exerted upwardly thereby against the piston plunger 24.

Connected to the arm 120, at a point relatively remote from its pivot 121, is one end of the actuator wire or element 127 of a flexible cable 128 which leads to the handle mounting plate 62 and has its other end connected to a relatively larger pin element 129 that is arranged to be projected into the path of movement of the manually operable member 60 and prevent movement thereof from the intermediate position shown in Figs. 2 and 4 to the extreme left-hand position of the handle shown in Fig. 3.

With the handle 60 and valve 41 in the intermediate position shown in Fig. 4 of the drawings, and the cylinders 20 being connected to the sump 31 through the valve 27, as previously described, lowering of the actuator ring 4 and pistons 20 is accomplished gravitationally principally through the weight of the actuator ring 4 (assisted initially by spring 95 and later by the weight of the forms) acting against the pressure fluid in the system and the counter-bias of the spring 123 associated with the arm 20. Consequently, when the actuator ring 4 has been lowered to its intermediate position and, if all of the forms 1 have been swung inwardly into seating engagement thereagainst, when the operator presses switch 98 the weight of the ring and the added weight of the forms will

cause the ring to move from its intermediate position to its maximum low position with accompanying final inward movement of the stocking forms as a group to the nested position thereof, shown in Figs. 2 and 4 of the drawings.

At the same time the final downward movement of the piston 20 against the fluid in the system and the counter-bias of the spring 23 causes the plunger 24 likewise to be actuated downwardly resulting in limited actuation of the arm 120 in the counter-clockwise direction about its pivot 121 against the action of the spring 123. Movement of the arm 120 in this manner exerts a pull upon the wire or core element 127 of the flexible cable 128 to an extent that the pin 129 connected to the other end thereof is moved to the left with respect to Fig. 5 sufficiently to withdraw it from the path of movement of the manually operable handle 60, whereupon the latter may be actuated into the extreme left-hand position shown in Fig. 3 thereof to cause lowering of the dome 33 in the manner previously described herein.

However, when the actuator ring 4 is in the intermediate position described, should the operator inadvertently fail to swing all of the forms 1 inwardly into position against the declining surface of the ring so that any single form is allowed to remain in the outward or spread position thereof, the latch member 110 associated with the said form, will not be retracted from the path of vertical movement of the actuator ring 4, but will remain in the inwardly projected position thereof shown in Fig. 6 of the drawing and thereby preclude downward movement of the actuator ring 4 to its maximum low position.

The piston 20 likewise is held against further downward movement by the pressure fluid in the system and by the force of the spring 123 acting through the arm 120 upon the depending plunger 24. Accordingly, the plunger 24 does not actuate the arm 120 in the counter-clockwise direction a distance sufficient to withdraw the pin 129 from the path of movement of the manually operable handle 60, and the operator is thereby precluded from moving the handle 60 from the intermediate position to the extreme left-hand position thereof to lower the dome 33 so long as any one of the plurality of forms 1 remains in the outward or spread position thereof.

Upon finding that he cannot move the handle 60 to the extreme left-hand position to lower the dome 33, the operator checks the forms and, noting that one or more of them has been left in the outward or spread position, he swings it inwardly seating it against the ring 4 and thereby simultaneously withdrawing the associated latch member 110 from the path of vertical travel of said ring, whereupon the combined weight of the ring 4 and the forms 1 actuates the piston 20 and plunger 24 to the maximum low position thereof thus actuating the arm 120 in the counter-clockwise direction sufficiently to retract the pin 129 from the path of movement of the handle 60 which may be moved immediately to the extreme left-hand position shown in Fig. 3, thereby positioning the valve 41 to effect lowering of the dome 33 and clamping thereof in closed position in the manner previously described.

From the foregoing description it will be observed that the present invention provides, in a preboarding machine of the type described, novel mechanism which is operable automatically to prevent lowering of the cover or dome in the event that one or more of the stocking forms is not swung inwardly and is allowed inadvertently

to remain in the outer spread position thereof. The invention, furthermore, provides novel mechanism operable as described which is positive and foolproof in operation and use.

While a particular embodiment of the present invention has been illustrated and described herein, it is not intended to limit the invention to such disclosure, and changes and modifications may be made therein and thereto within the scope of the following claims.

I claim:

1. In a stocking treating machine including a plurality of vertical stocking forms pivotally mounted for movement between an inner nested relation and an outer spread relation, a cover member arranged to enclose said forms in said inner nested relation and movable vertically to an elevated position above said forms, an actuator movable from a maximum low elevation to a maximum high elevation for effecting simultaneous movement of said forms from said inner nested to said outer spread relation, said cover and said actuator being constructed to descend from their elevated positions gravitationally, means operable to arrest descent of said actuator at an elevation intermediate said high and low elevations thereof for engagement by said forms in an intermediate spaced relation, means to effect further descent of said actuator to said maximum low elevation thereof and move said forms simultaneously from said intermediate spaced relation to said inner nested relation thereof, means operable to effect descent of said cover member, mechanism operable in the high and intermediate elevations of the actuator to prevent operation of said last mentioned means, and means operable in the outer spread relation of said forms to prevent descent of the actuator to its maximum low elevation and thereby prevent lowering of the cover until all of said forms are swung inwardly from said outer spread relation to the intermediate spaced relation thereof.

2. In a stocking treating machine including a plurality of vertical stocking forms pivotally mounted at their lower ends for movement between an inner nested relation and an outer spread relation, a cover member arranged to enclose said forms in said inner nested relation and movable vertically to an elevated position above said forms, an actuator movable from a maximum low elevation to a maximum high elevation for effecting simultaneous movement of said forms from said inner nested to said outer spread relation, said cover and said actuator being constructed to descend from their elevated positions gravitationally, means operable to arrest descent of said actuator at an elevation intermediate said high and low elevations thereof for engagement by said forms in an intermediate spaced relation, means to effect further descent of said actuator to said maximum low elevation thereof and move said forms simultaneously from said intermediate spaced relation to said inner nested relation thereof, means operable to effect descent of said cover member, mechanism operable in the high and intermediate elevations of the actuator to prevent operation of said last mentioned means, and a member associated with each of said forms positionable in the path of the actuator upon movement of the forms to said outer spread relation, each member being operable to prevent descent of the actuator to its maximum low elevation and thereby prevent lowering of the cover until all of said forms are swung inwardly from said outer spread relation to the intermediate spaced relation thereof.

3. In a stocking treating machine including a plurality of vertical stocking forms pivotally mounted for movement between an inner nested relation and an outer spread relation, a cover member arranged to enclose said forms in said inner nested relation and movable vertically to an elevated position above said forms, an actuator movable from a maximum low elevation to a maximum high elevation for effecting simultaneous movement of said forms from said inner nested to said outer spread relation, said cover and said actuator being constructed to descend from their elevated positions gravitationally, means operable to arrest descent of said actuator at an elevation intermediate said high and low elevations thereof for engagement by said forms in an intermediate spaced relation, means to effect further descent of said actuator to said maximum low elevation thereof and move said forms simultaneously from said intermediate spaced relation to said inner nested relation thereof, means operable to effect descent of said cover member, mechanism operable in the high and intermediate elevations of the actuator to prevent operation of said last mentioned means, and a slidable latch member associated with each stocking form and actuable thereby into the path of downward movement of the actuator upon movement of said forms to said outer spread relation, each of said latch members being operable to prevent descent of the actuator to its maximum low elevation and thereby prevent lowering of the cover until all of said forms are swung inwardly from said outer spread relation to the intermediate spaced relation thereof.

4. In a stocking treating machine including a plurality of vertical stocking forms pivotally mounted at their lower ends for movement between an inner nested relation and an outer spread relation, a cover member arranged to enclose said forms in said inner nested relation and movable vertically to an elevated position above said forms, an actuator movable from a maximum low elevation to a maximum high elevation for effecting simultaneous movement of said forms from said inner nested to said outer spread relation, said cover and said actuator being constructed to descend from their elevated positions gravitationally, control means operable in one position thereof to effect raising of said cover and actuator sequentially and in a second position to effect descent of said actuator while in a third position descent of said cover is effected, means operable to arrest descent of said actuator at an elevation intermediate said high and low elevations thereof for engagement by said forms in an intermediate spaced relation, means to effect further descent of said actuator to said maximum low elevation thereof and move said forms simultaneously from said intermediate spaced relation to said inner nested relation thereof, mechanism operable to prevent movement of said control means from said second to said third position thereof in the high and intermediate elevations of said actuator, and means operable upon movement of said forms to the outer spread relation thereof to prevent descent of said actuator to the maximum low elevation thereof so that said control means is precluded from movement to said third position to effect lowering of the cover until all of said forms are swung inwardly to said intermediate spaced relation thereof.

5. In a stocking treating machine including a plurality of vertical stocking forms pivotally mounted at their lower ends for movement between an inner nested relation and an outer spread relation, a cover member arranged to enclose said forms in said inner nested relation and movable vertically to an elevated position above said forms, an actuator movable from a maximum low elevation to a maximum high elevation for effecting simultaneous movement of said forms from said inner nested to said outer spread relation, said cover and said actuator being constructed to descend from their elevated positions gravitationally, control means operable in one position thereof to effect raising of said cover and actuator sequentially and in a second position to effect descent of said actuator while in a third position descent of said cover is effected, means operable to arrest descent of said actuator at an elevation intermediate said high and low elevations thereof for engagement by said forms in an intermediate spaced relation, means to effect further descent of said actuator to said maximum low elevation thereof and move said forms simultaneously from said intermediate spaced relation to said inner nested relation thereof, mechanism operable to prevent movement of said control means from said second to said third position thereof in the high and intermediate elevations of said actuator, and a member associated with each of said forms positionable in the path of the actuator upon movement of said forms to the outer spread relation thereof, each of said members being operable to prevent descent of said actuator to the maximum low elevation thereof so that said control means is precluded from movement to said third position to effect lowering of the cover until all of said forms are swung inwardly to said intermediate spaced relation thereof.

6. In a stocking treating machine including a plurality of vertical stocking forms pivotally mounted at their lower ends for movement between an inner nested relation and an outer spread relation, a cover member arranged to enclose said forms in said inner nested relation and movable vertically to an elevated position above said forms, an actuator movable from a maximum low elevation to a maximum high elevation for effecting simultaneous movement of said forms from said inner nested to said outer spread relation, said cover and said actuator being constructed to descend from their elevated positions gravitationally, control means operable in one position thereof to effect raising of said cover and actuator sequentially and in a second position to effect descent of said actuator while in a third position descent of said cover is effected, means operable to arrest descent of said actuator at an elevation intermediate said high and low elevations thereof for engagement by said forms in an intermediate spaced relation, means to effect further descent of said actuator to said maximum low elevation thereof and move said forms simultaneously from said intermediate spaced relation to said inner nested relation thereof, mechanism operable to prevent movement of said control means from said second to said third position thereof in the high and intermediate elevations of said actuator, and a slidable latch member associated with each stocking form and actuable thereby into the path of downward movement of the actuator movement of said forms to the outer spread relation thereof, each

latch member being operable to prevent descent of said actuator to the maximum low elevation thereof so that said control means is precluded from movement to said third position to effect lowering of the cover until all of said forms are swung inwardly to said intermediate spaced relation thereof.

7. In a stocking treating machine including a plurality of vertical stocking forms pivotally mounted at their lower ends for movement between an inner nested relation and an outer spread relation, a cover member arranged to enclose said forms in said inner nested relation and movable vertically to an elevated position above said forms, an actuator movable from a maximum low elevation to a maximum high elevation for effecting simultaneous movement of said forms from said inner nested to said outer spread relation, said cover and said actuator being constructed to descend from their elevated positions gravitationally, control means operable in one position thereof to effect raising of said cover and actuator sequentially and in a second position to effect descent of said actuator while in a third position descent of said cover is effected, means operable to arrest descent of said actuator at an elevation intermediate said high and low elevations thereof for engagement by said descent of said actuator to said maximum low elevation thereof and move said forms simultaneously from said intermediate spaced relation to said inner nested relation thereof, means controlled by the position of said actuator operable to prevent movement of said control means from said second to said third position thereof in the high and intermediate elevations of said actuator and to permit said control means to be moved to said third position in the maximum low elevation of said actuator, and means operable upon movement of said forms to the outer spread relation thereof to prevent descent of said actuator to the maximum low elevation thereof so that said control means is precluded from movement to said third position to effect lowering of the cover until all of said forms are swung inwardly to said intermediate spaced relation thereof.

8. In a stocking treating machine including a plurality of vertical stocking forms pivotally mounted at their lower ends for movement between an inner nested relation and an outer spread relation, a cover member arranged to enclose said forms in said inner nested relation and movable vertically to an elevated position above said forms, an actuator movable from a maximum low elevation to a maximum high elevation for effecting simultaneous movement of said forms from said inner nested to said outer spread relation, said cover and said actuator being constructed to descend from their elevated positions gravitationally, control means operable in one position thereof to effect raising of said cover and actuator sequentially and in a second position to effect descent of said actuator while in a third position descent of said cover is effected, means operable to arrest descent of said actuator at an elevation intermediate said high and low elevations thereof for engagement by said descent of said actuator to said maximum low elevation thereof and move said forms simultaneously from said intermediate spaced relation to said inner nested relation thereof, means controlled by the position of said actuator operable to prevent movement of said control means from said second to said third position thereof in the high and intermediate elevations of said actuator and to

permit said manual means to be moved to said third position in the maximum low elevation of said actuator, and a member associated with each of said forms positionable in the path of movement of the actuator upon movement of said forms to the outer spread relation thereof, each of said members being operable to prevent descent of said actuator to the maximum low elevation thereof so that said control means is precluded from movement to said third position to effect lowering of the cover until all of said forms are swung inwardly to said intermediate spaced relation thereof.

9. In a stocking treating machine including a plurality of vertical stocking forms pivotally mounted at their lower ends for movement between an inner nested relation and an outer spread relation, a cover member arranged to enclose said forms in said inner nested relation and movable vertically to an elevated position above said forms, an actuator movable from a maximum low elevation to a maximum high elevation for effecting simultaneous movement of said forms from said inner nested to said outer spread relation, said cover and said actuator being constructed to descend from their elevated positions gravitationally, control means operable in one position thereof to effect raising of said cover and actuator sequentially and in a second position to effect descent of said actuator while in a third position descent of said cover is effected, means operable to arrest descent of said actuator at an elevation intermediate said high and low elevations thereof for engagement by said descent of said actuator to said maximum low elevation thereof and move said forms simultaneously from said intermediate spaced relation to said inner nested relation thereof, means controlled by the position of said actuator operable to prevent movement of said control means from said second to said third position thereof in the high and intermediate elevations of said actuator and to permit said manual means to be moved to said third position in the maximum low elevation of said actuator, and a sfidable latch member associated with each stocking form and actuable thereby into the path of downward movement of the actuator upon movement of said forms to the outer spread relation thereof, each latch member being operable to prevent descent of said actuator to the maximum low elevation thereof so that said control means is precluded from movement to said third position to effect lowering of the cover until all of said forms are swung inwardly to said intermediate spaced relation thereof.

10. In a stocking treating machine including a plurality of vertical stocking forms pivotally mounted at their lower ends for movement between an inner nested relation and an outer spread relation, a cover member arranged to enclose said forms in said inner nested relation and movable vertically to an elevated position above said forms, a common actuator movable from a maximum low elevation to a maximum high elevation for effecting simultaneous movement of said forms to said outer spread relation, fluid operated means for raising said cover member to said elevated position and for raising said actuator from said low to said high elevation, said cover and said actuator being adapted to descend from their elevated positions gravitationally, a pressure fluid system connected to said fluid operated means and including a valve for controlling flow of pressure fluid to and from said fluid operated means, manual actuating means for said valve operable in one limit position to operate said valve to effect raising of said cover and actuator sequentially and in an intermediate position to operate said valve to effect descent of said actuator while in the other limit position said valve is positioned to effect descent of said cover, means including an element movable concurrently with said actuator operable to arrest descent of said actuator at an elevation intermediate said high and low elevations thereof for engagement by said forms in an intermediate spaced relation, means independent of said concurrently movable member to effect further descent of said actuator to said maximum low elevation thereof and move said forms simultaneously from said intermediate spaced relation to said inner nested relation thereof, a movable stop associated with said manual actuating means, connections between said stop and said actuator operable in the high and intermediate elevations thereof to position said stop in the path of movement of said manual actuating means and prevent movement thereof from said intermediate position thereof to said other limit position, and means positionable in the path of movement of said actuator upon movement of said forms to said outer spread relation operable to prevent descent of the actuator to said low elevation thereof so that the stop is maintained in the path of said manual actuating means to preclude movement thereof to said other limit position to lower the cover until all of said forms are swung inwardly from said outer spread relation to the intermediate spaced relation thereof.

11. In a stocking treating machine including a plurality of vertical stocking forms pivotally mounted at their lower ends for movement between an inner nested relation and an outer spread relation, a cover member arranged to enclose said forms in said inner nested relation and movable vertically to an elevated position above said forms, a common actuator movable from a maximum low elevation to a maximum high elevation for effecting simultaneous movement of said forms to said outer spread relation, fluid operated means for raising said cover member to said elevated position and for raising said actuator from said low to said high elevation, said cover and said actuator being adapted to descend from their elevated positions gravitationally, a pressure fluid system connected to said fluid operated means and including a valve for controlling the flow of pressure fluid to and from said fluid operated means, manual actuating means for said valve operable in one limit position to operate said valve to effect raising of said cover and actuator sequentially and in an intermediate position to operate said valve to effect descent of said actuator while in the other limit position said valve is positioned to effect descent of said cover, means including an element movable concurrently with said actuator operable to arrest descent of said actuator at an elevation intermediate said high and low elevations thereof for engagement by said forms in an intermediate spaced relation, means independent of said concurrently movable member to control further descent of said actuator to said maximum low elevation thereof and move said forms simultaneously from said intermediate spaced relation to said inner nested relation thereof, a movable stop associated with said manual actuating means, connections between said stop and said actuator operable in the high and intermediate elevations thereof to position said stop in the path of movement of said manual actuating means and pre-

vent movement thereof from said intermediate position thereof to said other limit position, and a member associated with each of said stocking forms positionable in the path of movement of said actuator upon movement of said forms to said outer spread relation, each member being operable to prevent descent of the actuator to said low elevation thereof so that the stop is maintained in the path of said manual actuating means which is thereby precluded from movement to said other limit position to effect lowering of the cover until all of said forms are swung inwardly from said outer spread relation to the intermediate spaced relation thereof.

12. In a stocking treating machine including a plurality of vertical stocking forms pivotally mounted at their lower ends for movement between an inner nested relation and an outer spread relation, a cover member arranged to enclose said forms in said inner nested relation and movable vertically to an elevated position above said forms, a common actuator movable from a maximum low elevation to a maximum high elevation for effecting simultaneous movement of said forms to said outer spread relation, fluid operated means for raising said cover member to said elevated position and for raising said actuator from said low to said high elevation, said cover and said actuator being adapted to descend from their elevated positions gravitationally, a pressure fluid system connected to said fluid operated means and including a valve for controlling the flow of pressure fluid to and from said fluid operated means, manual actuating means for said valve operable in one limit position to operate said valve to effect raising of said cover and actuator sequentially and in an intermediate position to operate said valve to effect descent of said actuator while in the other limit position said valve is positioned to effect descent of said cover, means including an element movable concurrently with said actuator operable to arrest descent of said actuator at an elevation intermediate said high and low elevations thereof for engagement by said forms in an intermediate spaced relation, means independent of said concurrently movable member to control further descent of said actuator to said maximum low elevation thereof and move said forms simultaneously from said intermediate spaced relation to said inner nested relation thereof, a movable stop associated with said manual actuating means, connections between said stop and said actuator operable in the high and intermediate elevations thereof to position said stop in the path of movement of said manual actuating means and prevent movement thereof from said intermediate position thereof to said other limit position, and a slidable latch associated with each of said stocking forms actuable thereby into the path of downward movement of said actuator upon movement of said forms to said outer spread relation, each of said latch members being operable to prevent descent of the actuator to said low elevation thereof so that the stop is maintained in the path of said manual actuating means to preclude movement thereof to said other limit position and lower the cover until all of said forms are swung inwardly from said outer spread relation to the intermediate spaced relation thereof.

13. In a stocking treating machine including a plurality of vertical stocking forms pivotally mounted at their lower ends for movement between an inner nested relation and an outer spread relation, a cover member arranged to enclose said forms in said inner nested relation and movable vertically to an elevated position above said forms, a common actuator movable from a maximum low elevation to a maximum high elevation for simultaneously effecting movement of said forms to said outer spread relation, fluid operated means for raising said cover member to said elevated position and for raising said actuator from said low to said high elevation, said cover and said actuator being adapted to descend from their elevated positions gravitationally, a pressure fluid system connected to said fluid operated means and including a valve for controlling the flow of pressure fluid to and from said fluid operated means, manual actuating means for said valve operable in one limit position to operate said valve to effect raising of said cover and actuator sequentially and in an intermediate position to operate said valve to effect descent of said actuator while in the other limit position said valve is positioned to effect descent of said cover, a second valve in said fluid system for controlling descent of said actuator, means associated with said fluid system including an element movable concurrently with said actuator operable to effect actuation of said valve and arrest descent of said actuator at an elevation intermediate said high and low elevations thereof for engagement by said forms in an intermediate spaced relation, means for actuating said valve independently of said concurrently movable member to control further descent of said actuator to said maximum low elevation thereof and move said forms simultaneously from said intermediate spaced relation to said inner nested relation thereof, a movable stop associated with said manual actuating means, connections between said stop and said actuator operable in the high and intermediate elevations thereof to position said stop in the path of movement of said manual actuating means and prevent movement thereof from said intermediate position thereof to said other limit position, and means positionable in the path of movement of said actuator upon movement of said forms to said outer spread relation operable to prevent descent of the actuator to said low elevation thereof so that the stop is maintained in the path of said manual actuating means which is thereby precluded from movement to said other limit position to effect lowering of the cover until all of said forms are swung inwardly from said outer spread relation to the intermediate spaced relation thereof.

14. In apparatus of the type described, a cover member movable vertically to an elevated position, an actuator movable from a maximum low elevation to a maximum high elevation, said cover and said actuator being constructed to descend from their elevated positions gravitationally, means operable to arrest descent of said actuator at an elevation intermediate said high and low elevations thereof, means to effect further descent of said actuator to said maximum low elevation, means operable to effect descent of said cover member, mechanism controlled by the position of said actuator operable to prevent operation of said last mentioned means in the high and intermediate elevations of said actuator, and means operable in one position thereof to prevent descent of said actuator to the maximum low elevation thereof to preclude lowering of the cover.

15. In a stocking treating machine including a plurality of stocking forms pivotally mounted for movement between an inner nested relation and outer spread relation, a vertically movable member arranged in the low position thereof to sup-

port the stocking forms in said inner nested relation and in an elevated position thereof to support said stocking forms in a position intermediate said inner nested and outer spread relations thereof, and means operable in outer spread relation of said stocking forms to prevent movement of the member from said elevated position to the low position thereof until all of the stocking forms are swung inwardly from said outer spread relation to their intermediate position resting on said member.

16. In a stocking treating machine including a plurality of stocking forms pivotally mounted for movement between an inner nested relation and outer spread relation, a vertically movable member arranged in the low position thereof to support the stocking forms in said inner nested relation and in an elevated position thereof to support said stocking forms in a position intermediate said inner nested and outer spread relations thereof, and means associated with each stocking form and actuable thereby into the path of downward movement of the member in the elevated position thereof upon movement of said stocking forms from said intermediate position to said outer spread relation thereof, each of said means being operable to prevent movement of said member from said elevated position to the low position thereof until all of the stocking forms are swung inwardly from said outer spread relation to the intermediate position thereof resting on said member.

17. In a stocking treating machine including a plurality of stocking forms pivotally mounted for movement between an inner nested relation and outer spread relation, a vertically movable member arranged in the low position thereof to support the stocking forms in said inner nested relation and in an elevated position thereof to support the stocking forms in a position intermediate said inner nested and outer spread relations thereof, and latch means operatively associated with each stocking form and slidable thereby into the path of downward movement of the member in the elevated position thereof upon movement of said stocking forms from said intermediate position to said outer spread relation thereof, each of said latch means being operable to prevent movement of said member from said elevated position to the low position thereof until all of the stocking forms are swung inwardly from said outer spread relation to the intermediate position thereof resting on said member.

18. In a stocking treating machine including a plurality of stocking forms pivotally mounted for movement between an inner nested relation and an outer spread relation, a vertically movable member arranged in the low position thereof to support the stocking forms in said inner nested relation and in an elevated position thereof to support said stocking forms in a position intermediate said inner nested and outer spread relations thereof, a cover arranged to enclose said forms in said inner nested relation and movable vertically to an elevated position above said forms, mechanism for raising and lowering said cover and actuator including means operable to prevent lowering of the cover while said member is in said elevated position, and means operable in the outer spread relation of said stocking forms to prevent movement of said member from said elevated position to the low position thereof until all of the stocking forms are swung inwardly from said outer spread relation to the intermediate

position thereof resting on said member whereby the cover is prevented from lowering so long as any of the stocking forms remains in the outer spread relation.

19. In a stocking treating machine including a plurality of stocking forms pivotally mounted for movement between an inner nested relation and an outer spread relation, a vertically movable member arranged in the low position thereof to support the stocking forms in said inner nested relation and in an elevated position thereof to support said stocking forms in a position intermediate said inner nested and outer spread relations thereof, a cover arranged to enclose said forms in said inner nested relation and movable vertically to an elevated position above said forms, mechanism for raising and lowering said cover and actuator including means operable to prevent lowering of the cover while said member is in said elevated position, and means associated with each stocking form and actuable thereby into the path of downward movement of the member in the elevated position thereof upon movement of said stocking forms from said intermediate position to said outer spread relation thereof, each of said means being operable to prevent movement of said member from the elevated position to the lower position thereof until all of the stocking forms are swung inwardly from said outer spread relation to the intermediate position thereof resting on said actuator whereby lowering of the cover is prevented so long as any of said forms remains in the outer spread relation.

20. In a stocking treating machine including a plurality of stocking forms pivotally mounted for movement between an inner nested relation and an outer spread relation, a vertically movable member arranged in the low position thereof to support the stocking forms in said inner nested relation and in an elevated position thereof to support said stocking forms in a position intermediate said inner nested and outer spread relations thereof, a cover arranged to enclose said forms in said inner nested relation and movable vertically to an elevated position above said forms, mechanism for raising and lowering said cover and actuator including means operable to prevent lowering of the cover while said member is in said elevated position, and latch means operatively connected with each stocking form and slidable thereby into the path of downward movement of the member in the elevated position thereof upon movement of said stocking forms from said intermediate position to said outer spread relation thereof, each of said latch means being operable to prevent movement of said member from said elevated position to the low position thereof until all of the stocking forms are swung inwardly from said outer spread relation to the intermediate position thereof resting on said actuator whereby lowering of the cover is prevented so long as any of said forms remains in said outer spread relation.

FRED BACKHUS.

REFERENCES CITED

The following references are of record in the file of this patent:

UNITED STATES PATENTS

Number	Name	Date
2,419,645	Hurxthal	Apr. 29, 1947