June 17, 1969 L. T. ELIEL 3,450,386

PORTABLE HOIST FOR LUGGAGE AND THE LIKE

Filed Sept. 15, 1967

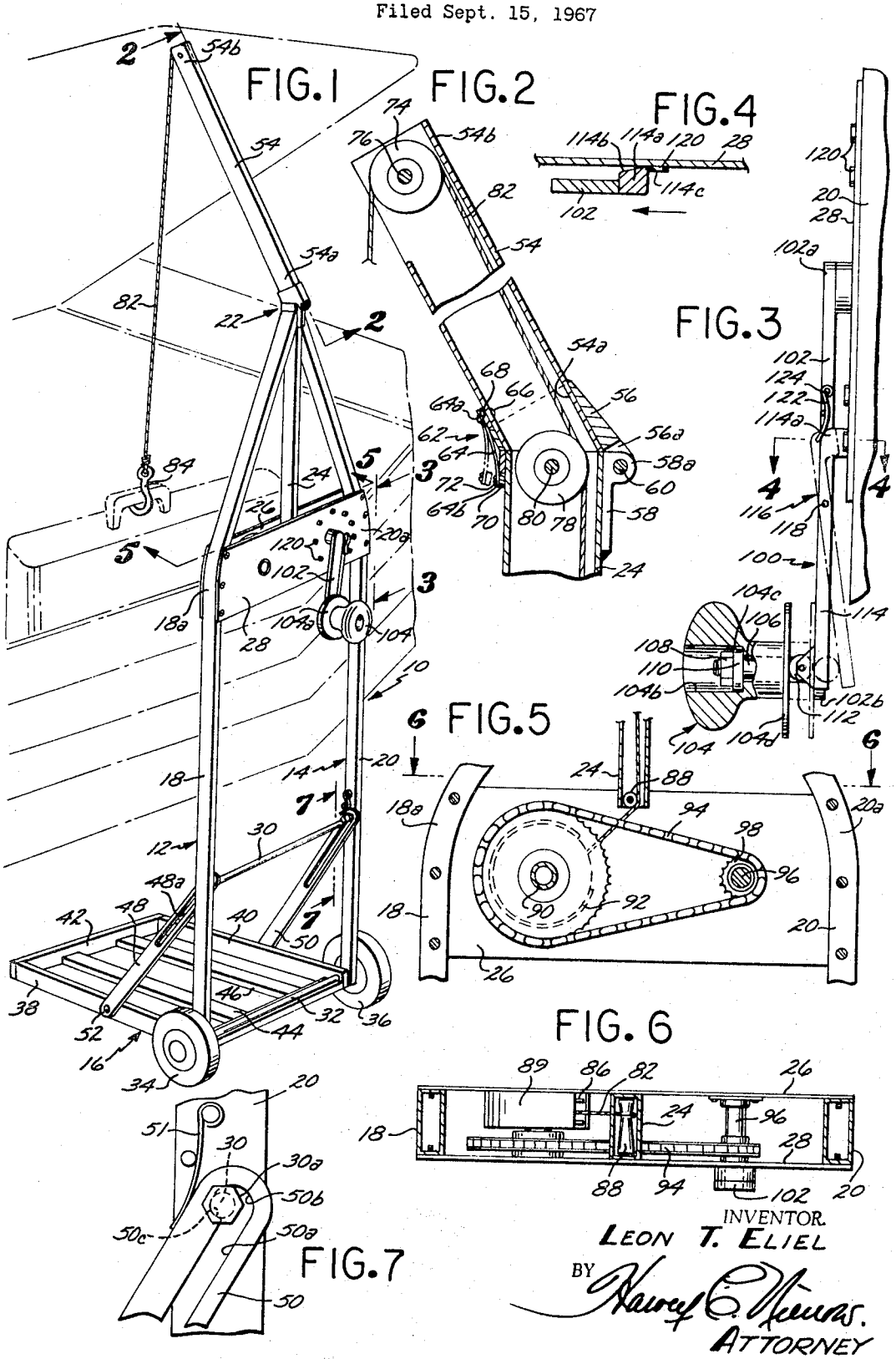

INVENTOR.
LEON T. ELIEL
BY Harvey C. Nienow.
ATTORNEY

United States Patent Office 3,450,386
Patented June 17, 1969

3,450,386

PORTABLE HOIST FOR LUGGAGE AND THE LIKE

Leon T. Eliel, 117-B Via Estrada,
Laguna Hills, Calif. 92653

Filed Sept. 15, 1967, Ser. No. 667,944
Int. Cl. B66c 23/60; B66d 1/30
U.S. Cl. 254—139.1 4 Claims

ABSTRACT OF THE DISCLOSURE

The present invention comprises a frame adapted with wheels and a hoist mechanism whereby luggage and similar articles can be lifted and conveniently transported from one location to another. It is particularized by comprising a frame having a platform which can be retracted and an extension which provides a line and hook over the platform when the latter is in operating position. A manual hoist mechanism or crank is provided for raising and lowering the hook, there being a ratchet mechanism to require release to enable the hook and luggage to be lowered. Such ratchet mechanism comprises a pawl engageable with limit stops on the frame, the manual handle being movable in a secondary direction for releasing such ratchet for lowering purposes.

Further, the device is characterized by the extension being collapsible to a position adjacent the frame for ease in transporting the entire device.

The present invention relates to portable hoists for luggage and the like and, more particularly, to mechanisms for raising and transporting articles from one location to another.

Within recent years, the standard of living, particularly within the United States, has improved to the point where people are now able to retire at a younger age. Many such retired persons turn to travel as a way of enjoyably spending their remaining years.

Most travelers today are from the older or senior portion of our society. By and large, they are not particularly well adapted for lifting heavy luggage and transporting the same from the home to the automobile or other means of transportation. As a result of this, many older folks find it difficult to do the traveling they desire, or find it inconvenient to hire people to carry their bags and luggage at every instance.

It has been realized for sometime that it would be desirable to have means of some kind whereby even the most heavy and cumbersome pieces of luggage could be handled conveniently by even the most elderly or fragile person.

It is an object of the present invention to provide a portable hoist which can be operated simply and without considerable human effort in raising, lowering and transporting luggage from one location to another.

Another object of the present invention is to provide a hoist as characterized above which can be transported with the luggage itself so as to be usable at a relatively remote location.

Another object of the present invention is to provide a hoist as characterized above which is collapsible so as to be arranged in a relatively small compact package for fitting within an automobile trunk or the like.

Another object of the present invention is to provide a hoist as characterized above which employs manual means for raising and lowering luggage or any other article, but wherein spring loaded ratchet means is provided for preventing accidental release of such luggage once it has been raised.

A still further object of the present invention is to provide a hoist as characterized above having a manual

crank which not only is employed for raising and lowering the luggage but which also controls ratchet means for preventing accidental lowering.

An even further object of the present invention is to provide a hoist as characterized above which is simple and inexpensive to manufacture and which is rugged and dependable in operation.

The novel features which I consider characteristic of my invention are set forth with particularity in the appended claims. The device itself, however, both as to its organization and mode of operation, together with additional objects and advantages thereof, will best be understood from the following description of specific embodiments when read in connection with the accompanying drawings, in which:

FIGURE 1 is a perspective view of a hoist according to the present invention;

FIGURE 2 is a fragmentary sectional view of such hoist, taken substantially along line 2—2 of FIGURE 1;

FIGURE 3 is a fragmentary side elevational view, taken substantially along line 3—3 of FIGURE 1;

FIGURE 4 is a fragmentary sectional view, taken substantially along line 4—4 of FIGURE 3;

FIGURE 5 is a fragmentary sectional view, taken substantially along line 5—5 of FIGURE 1;

FIGURE 6 is a sectional view, taken substantially along line 6—6 of FIGURE 5; and

FIGURE 7 is a fragmentary side elevational view, taken substantially along line 7—7 of FIGURE 1.

Like reference characters indicate corresponding parts throughout the several views of the drawings.

Referring to FIGURE 1 of the drawings there is shown therein a portable hoist **10** according to the present invention.

Such hoist comprises a frame **12** having a main portion **14** and a platform **16** hingedly connected thereto. Frame **14** is formed of generally tubular side supports **18** and **20**, each of which is arcuately shaped as at **18***a* and **20***a* so as to meet at the apex **22** of frame **12**. Although substantially any type of style of structural member may be employed for such supports, as for instance circular or U-shaped steel channels, it has been found preferable to employ steel tubing having substantially square or rectangular cross-section. Such supports thus provide the desired srength for insuring suitable overall strength for the entire frame.

A centrally located support **24** is positioned generally vertically from the apex **22** of the frame **12** to a position between a pair of opposed mounting plates **26** and **28**, the latter of which are bolted or riveted to the side supports **18** and **20** as shown in FIGURES 1, 5 and 6 of the drawings. The lower end of support **24** is suitably secured to such mounting plates to provide the desired srength for the frame.

A pair of mounting bolts or studs **30**, each having a head **30***a*, are secured respectively in the side supports **18** and **20** in opposed relation as shown. Such bolts constitute part of the locking and support mechanism for the platform **16** as will hereinafter be explained in greater detail.

Extending through suitable aligned openings in the lower end of side supports **18** and **20**, is an axle **32** which carries wheels **34** and **36** at its opposite ends. Such wheels, of course, faciiltate transporting of the entire frame along the ground or pavement as will hereinafter become more apparent.

Platform **16** is generally square or rectangular in construction and is composed of suitable tubular support members **38**, **40** and **42**, and braces **44** and **46**. All of such members of platform **16** are firmly welded together to provide a unitary structure capable of supporting a

reasonable weight such as encountered with luggage and the like.

The side support members **38** and **40** of platform **16** are provided with aligned through openings for receiving axle **32** as shown in FIGURE 1 of the drawings. Thus, platform **16** is pivotally mounted on or relative to frame **12** so as to be movable from a retracted position to an operating or extended position as shown in FIGURE 1.

Mounted on either side of platform **16** is a locking and support member as shown at **48** and **50**. One end of each of such members is pivotally connected to the corresponding side support member of platform **16** as by a rivet, screw or bolt as shown at **52**.

As shown more particularly in FIGURE 7 of the drawings, each of the members **48** and **50** is formed with an elongated slot as shown at **50***a* with respect to member **50**, the upper end **50***b* of such slot being enlarged and offset to provide a shoulder **50***c*. As will be readily understood by those persons skilled in the art, the slot or opening **48***a* of member **48** is similar or identical to the slot **50***a* of member **50**.

The members **48** and **50** are positioned on the respective bolts **30** in the supports **18** and **20** such that the bolts extend through the slots **48***a* and **50***a*. The heads **30***a* of the bolts prevent disengagement of the members **48** and **50** from their respective mounting bolts **30**.

To facilitate quick and easy manual release of platform **16** to its retracted position, a procedure which will hereinafter be explained in detail, a rod **51** is firmly secured between the upper ends of members **48** and **50**. Such rod not only acts as a tie-rod for holding such members in fixed relation but also acts as a convenient handle for releasing the supports for the platform.

Piovtally fixed to the apex **22** of frame **12** is an extension **54**. The lower end **54***a* of extension **54** is provided with a collar **56** formed with a pair of tabs **56***a* constituting a clevis. A similar member **58** is mounted on frame **12** at the apex **22** and is formed with a tab **58***a* which fits within such clevis. A pivot pin **60** is provided for enabling the extension **54** to pivot rearwardly as will hereinafter appear from its operating position to its retracted position.

A locking device **62** is provided between the extension **54** and frame **12** to maintain the former in its operating position. Such locking means comprises an elongated leaf spring **64** one end **64***a* of which is firmly secured to end **54***a* of extension **54** by means of a rivet **66** and a spacer **68**. The opposite end **64***b* of leaf spring **64** is attached to a latch member **70** by means of a bolt or screw **72**. Thus, when the extension **54** is moved from its retracted to its operating position the latch member **70** is caused to engage the lowermost edge of the mounting member **58** as shown in solid lines in FIGURE 2 of the drawings. To return the extension to its retracted position it is first necesary to manually move the leaf spring **64** to its broken line position as shown in FIGURE 2.

Extension **54** is also provided with an end portion **54***b* which is disposed over the mid-portion of platform **16** when the latter is in its extended or operating position. A pulley **74** is rotatably mounted in the end portion **54***b* of extension **54** by means of a pivot pin **76**. A similar pulley **78** is mounted at the apex **22** of frame **12** within the tubular support **24** by means of a pivot pin **80**.

A chain or line **82**, which may be formed of twine, metal, nylon or substantially any other flexible material, is extended over the pulleys **74** and **78** as shown most clearly in FIGURE 2 of the drawings. Such line carries a hook **84** at one end thereof, although substantially any type of latching or gripping means may be employed.

The opposite end of line **82** extends downwardly through support **24** and is wound on a cylindrical member **86**. A pulley **88** at the bottom of support **24** suitably positions the line **82** in spaced relation to the side walls of the support **24** and guides the line on and off the cylindrical member **86**.

Cylindrical member **86** is rotatably positioned within a housing **89** attached to plate **26**, on a shaft **90** which extends between and is suitably journaled in mounting plates **26** and **28**. Also mounted on such shaft **90** is a sprocket or gear **92** which cooperates with a drive chain **94**.

A second rotatable shaft **96** is suitably journaled in the plates **26** and **28**, there being another sprocket or gear **98** on shaft **96** for cooperation with drive chain **94**. It has been found preferable to have the sprocket or gear **98** considerably smaller than the sprocket or gear **92** to provide increased mechanical advantage and to decrease the speed of travel of hook **84** as will hereinafter become apparent.

The drive shaft **96** extends through a suitable opening in plate **28** and a crank **100** is mounted thereon as shown most clearly in FIGURE 3 of the drawings. Such crank **100** comprises an arm **102** one end **102***a* of which is firmly connected to shaft **96**. The other end **102***b* of arm **102** carries a handle or knob **104**.

A stud **106** is firmly secured to end portion **102***b* of arm **102** to extend therefrom at substantially right angles thereto. A knob **104** is formed with a central through opening **104***a* which is enlarged as at **104***b* to provide an annular shoulder **104***c*. The opening **104***a* of knob **104** receives stud **106**, and a fastening nut **108** and washer **110** are mounted on the threaded end of stud **106**. The washer **110** engages the shoulder **104***c* as shown most clearly in FIGURE 3 of the drawings.

The knob **104** is further formed with a relatively large annular flange **104***d*. Such flange engages a roller **112** which is carried by a pawl member **114**, the latter of which is part of a ratchet mechanism **116**. Pawl **114** is pivotally mounted on arm **102** by a pivot pin **118**, and is provided with an offset portion **114***a*.

As shown most clearly in FIGURE 4 of the drawings, end portion **114***a* is provided with a beveled surface **114***b* affording an acute angle **114***c* for the end portion **114** for engagement with suitable stop elements **120** circumferentially spaced on plate **28** as shown most clearly in FIGURE 1 of the drawings. A leaf spring **122**, having one end pivotally mounted on arm **102** by a pivot pin **124**, is positioned as shown in FIGURE 3 to urge the offset end portions **114***a* of pawl **114** toward mounting plate **28** and elements **120**.

The above-described portable hoist is readily used to hoist and transport luggage as well as substantially any other article. To raise the hook **84** and such luggage, it is merely necessary to rotate arm **102** in a clockwise direction as viewed in FIGURE 1. This is accomplished, of course, by gripping the knob **104** and exerting a rotational force on arm **102**. This action turns sprocket **98** as well as sprocket **92** through chain drive **94**. As a result of this action the cylindrical member **86** is rotated to thereby retrieve the line **82** over the pulleys **78** and **74** so as to raise the hook **84**.

The ratchet mechanism **116** is no impediment to such rotational movement of arm **102** due to the beveled surface **114***b* of pawl **114**. Any reverse or counterclockwise movement of arm **102**, however, is prevented by engagement of the acute corner **114***c* of pawl **114** with one of the stop elements **120** on plate **28**.

When it is desired to lower the luggage, it is merely necessary for the operator to release the ratchet mechanism **116** by rectilinearly moving the knob **104** toward plate **28**, and to rotate arm **102** in its counterclockwise direction. Such rectilinear movement of knob **104** causes flange **104***d* to pivot pawl **114** to its broken line position shown in FIGURE 3. Such movement of pawl **114**, of course, is against the force of leaf spring **122**.

Thus the ratchet mechanism **116** is released enabling the arm **102** to be rotated in the counterclockwise direction to lower the hook **84**. Throughout such rotation of arm **102**, of course, the knob **104** remains in its release or depressed position, the flange **104***d* rolling on the roller **112** throughout the rotation of said arm. Such

rectilinear movement of knob **104** is facilitated by the lost motion connection of stud **106** within the opening **104***a* of knob **104**.

Release of the knob **104** enables leaf spring **122** to automatically return pawl **114** to its locking position and knob **104** to its retracted position. Thus the latching mechanism **116** becomes automatically effective upon release of the manually operated knob **104**.

Thus, the luggage attached to hook **84** can be lowered onto platform **16**. In any event, the entire frame and luggage attached to hook **84** can be transported merely by moving the frame **12** on wheels **34** and **36**.

It is frequently desirable to transport the portable hoist with the luggage so as to be usable at a given destination. To facilitate packing and storing of such portable hoist, after the luggage has been suitably removed from hook **84** the extension **54** is pivoted rearwardly about pin **60** after the locking mechanism **62** has been released as above explained. Thus, the extension **54** is caused to be positioned adjacent the frame **12**.

The platform **16** can also be retracted by pivoting the support members **48** and **50** to release the shoulders in the slots therein from adjacent the respective bolts **30**. Such pivotal movement of members **48** and **50**, of course, is against the force of leaf spring **64**. The entire platform **16** can then be rotated or pivoted upwardly to a position adjacent the frame **12**. In this manner the entire hoist is made compact and can be placed in an automobile trunk or substantially any other confined space where the luggage is located.

It is thus seen that the present invention provides a portable hoist for luggage or any other article, and is provided with certain features of compactness and ease in operation.

Although I have shown and described certain specific embodiments of my invention, I am fully aware that many modifications thereof are possible.

I claim:

1. A portable hoist for luggage and the like comprising in combination, a frame having a main portion and a platform hingedly connected thereto for movement between extended and retracted positions, wheels on said frame to facilitate transporting thereof, a retractable extension on said frame movable from a position over said platform when the latter is extended to retracted position adjacent said frame, hoist means comprising a flexible line suspended from said extension and carrying a hook to engage luggage and the like, and retrieval means on said frame connected to said line to retrieve the same on said extension to thereby lift said hook to permit transporting of said luggage and the like said retrieval means comprising a manual crank and a rotatable cylindrical member whereon said line is wound, said manual crank being operatively associated with said cylindrical member to effect rotation thereof for raising and lowering said hook and releasable ratchet means limiting rotation of said cylindrical member to one direction unless and until said ratchet means is released to permit reverse rotation of said crank to effect rotation of said cylindrical member in the direction opposite to said one direction, said manual crank comprising a rotatable arm mounted on said frame for rotation of said cylindrical member an dincludes a handle to effect rotation of said arm, and said ratchet means comprises a pawl on said rotatable arm for engagement with prearranged stop elements on said frame and wherein said pawl is movably mounted on said rotatable arm and said handle is rectilinearly movable on said arm and engageable with said pawl, whereby rectilinear movement of said handle on said arm effects movement of said pawl thereon to effect disengagement of the latter with said stop elements to thereby permit reverse rotation of said cylindrical member for lowering said hook.

2. A portable hoist for luggage and the like according to claim **1**, wherein said extension is elongated having one end hingedly mounted to said frame and another end to be disposed over said platform when both are in non-retracted operating positions, and travel limiting means provided on said extension for engagement with said frame to define the operating position of said extension.

3. A portable hoist for luggage and the like according to claim **2**, wherein said extension is provided with a pulley at its extended end to receive said line to facilitate movement of the latter in raising and lowering said hook.

4. A portable hoist for luggage and the like according to claim **3**, wherein spring loaded locking means is provided on said main portion and platform of said frame to lock said platform in extended position unless and until said locking means is released to permit said platform to be hingedly moved to retracted position adjacent said main portion of said frame.

References Cited

UNITED STATES PATENTS

552,599	1/1896	Valiant	188—82.77
3,048,371	8/1962	Klimek	254—139
3,123,229	3/1964	Kleiman	254—139
3,158,266	11/1964	Manaugh	212—8
3,212,788	10/1965	Adler	280—36

FOREIGN PATENTS

813,617	5/1959	Great Britain.

EVON C. BLUNK, *Primary Examiner.*

H. C. HORNSBY, *Assistant Examiner.*

U.S. Cl. X.R.

74—533; 188—82.3, 82.77; 254—145, 186