K. C. HOUT & C. T. HENTSCHEL.

UMBRELLA COVERING MACHINE.

APPLICATION FILED JUNE 30, 1914.

1,135,803.

Patented Apr. 13, 1915.

4 SHEETS—SHEET 1.

Fig. 1.

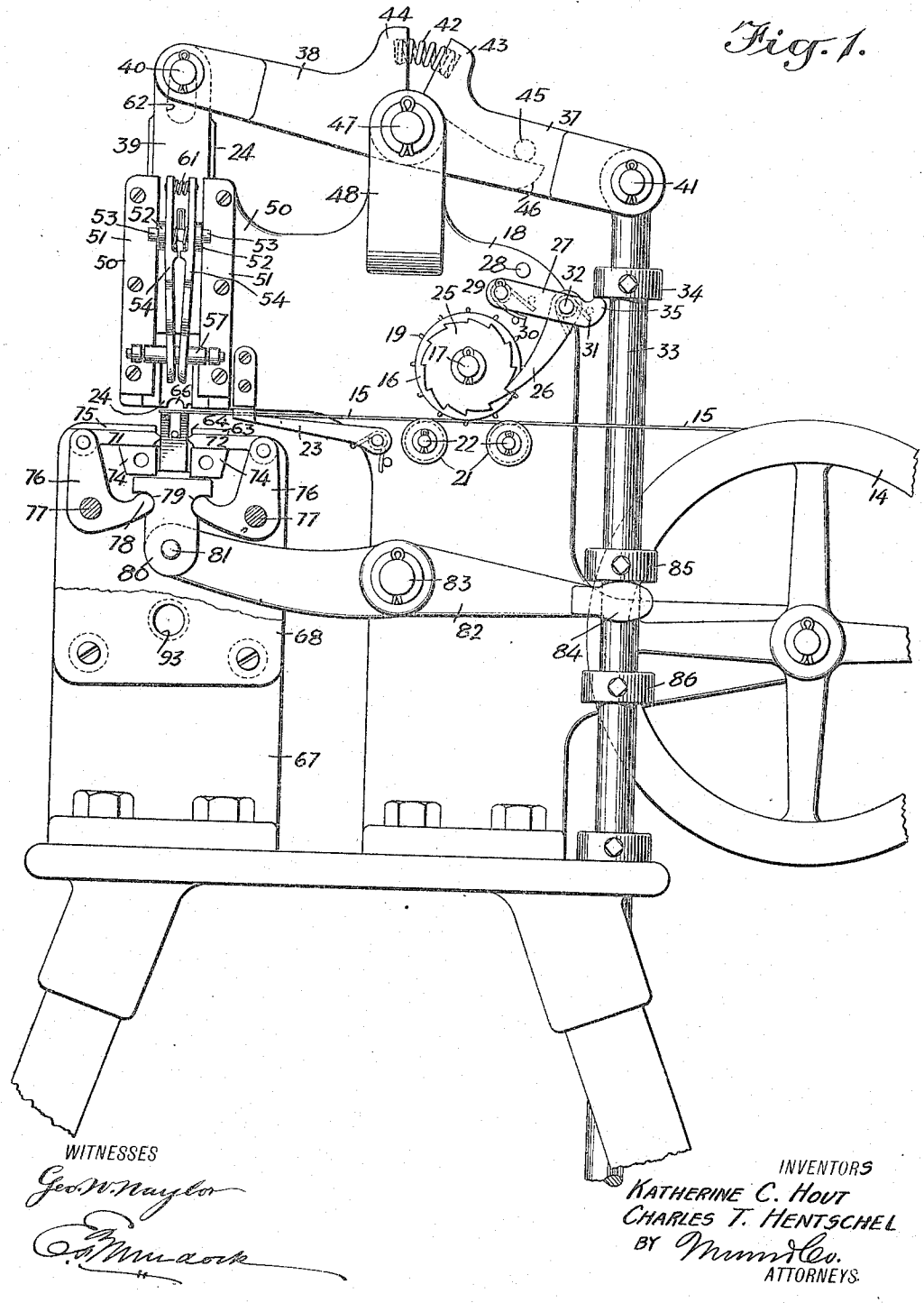

WITNESSES

Geo. W. Naylor

INVENTORS

KATHERINE C. HOUT

CHARLES T. HENTSCHEL

BY Munn & Co.

ATTORNEYS.

THE NORRIS PETERS CO., PHOTO-LITHO., WASHINGTON, D. C

K. C. HOUT & C. T. HENTSCHEL.

UMBRELLA COVERING MACHINE.

APPLICATION FILED JUNE 30, 1914.

1,135,803.

Patented Apr. 13, 1915.

4 SHEETS—SHEET 2.

Fig. 3.

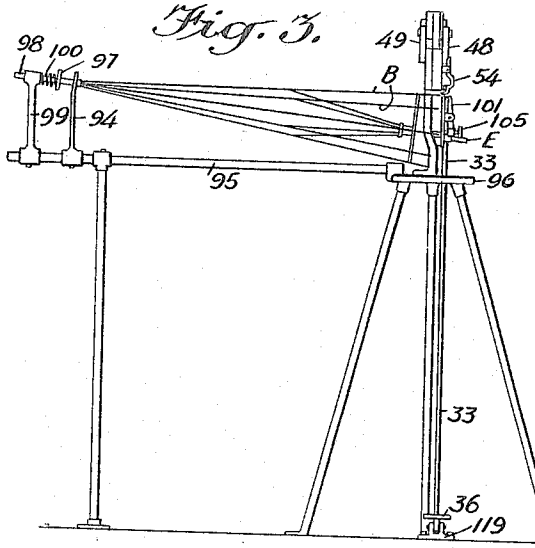

Fig. 2.

WITNESSES

Geo. W. Naylor

C. F. Murdock

INVENTORS

KATHERINE C. HOUT

CHARLES T. HENTSCHEL

BY Munn & Co.

ATTORNEYS

THE NORRIS PETERS CO., PHOTO-LITHO., WASHINGTON, D. C.

K. C. HOUT & C. T. HENTSCHEL.
UMBRELLA COVERING MACHINE.
APPLICATION FILED JUNE 30, 1914.

1,135,803.

Patented Apr. 13, 1915.
4 SHEETS—SHEET 3.

Fig. 4.

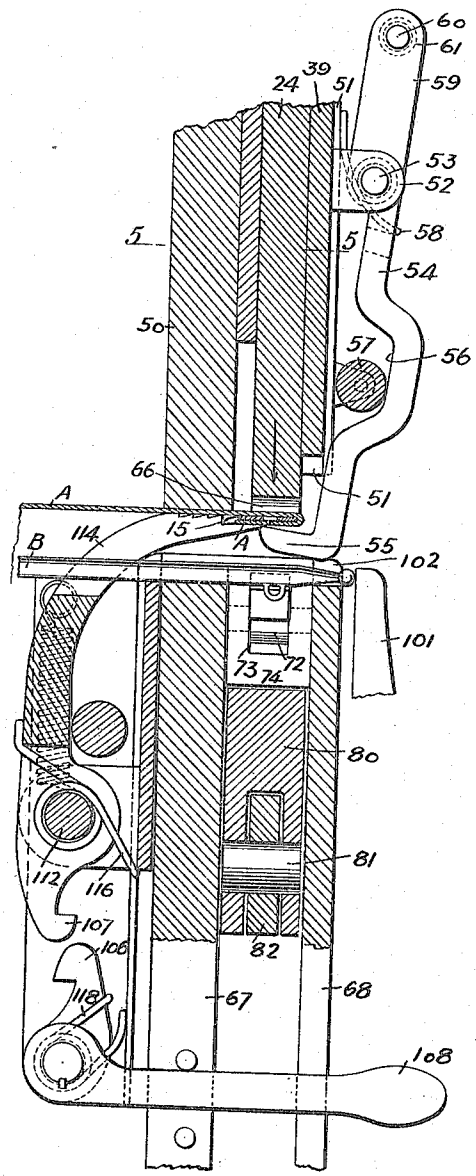

Fig. 5.

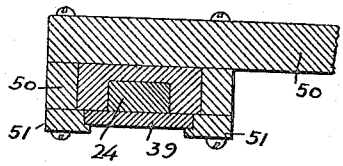

Fig. 6.

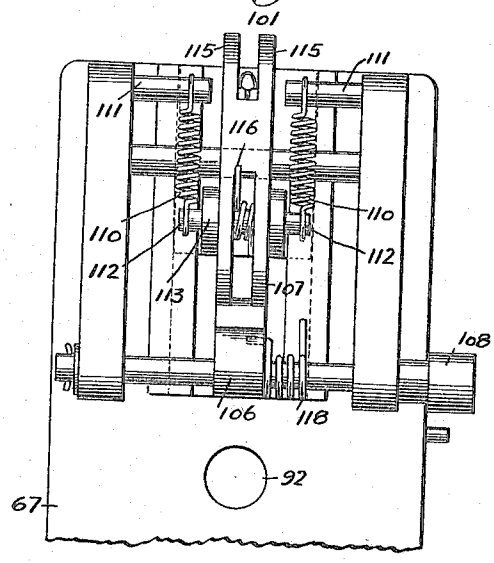

WITNESSES
Geo. W. Naylor
C. F. Mudock

INVENTORS
KATHERINE C. HOUT
CHARLES T. HENTSCHEL
BY Munn & Co
ATTORNEYS

THE NORRIS PETERS CO., PHOTO-LITHO., WASHINGTON, D. C.

K. C. HOUT & C. T. HENTSCHEL.

UMBRELLA COVERING MACHINE.

APPLICATION FILED JUNE 30, 1914.

1,135,803.

Patented Apr. 13, 1915.

4 SHEETS—SHEET 4.

Fig. 7.

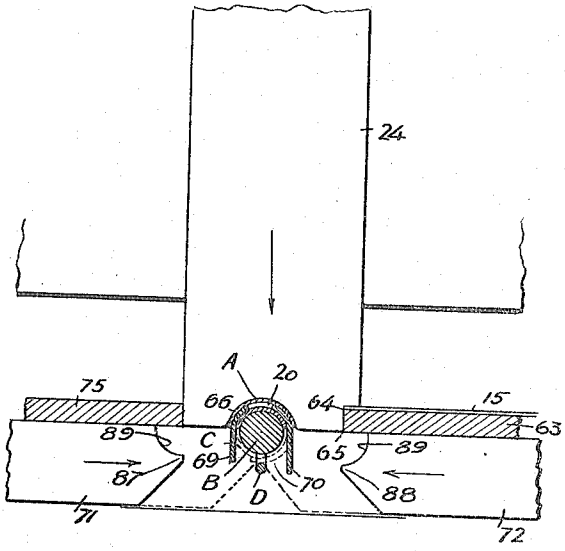

Fig. 8.

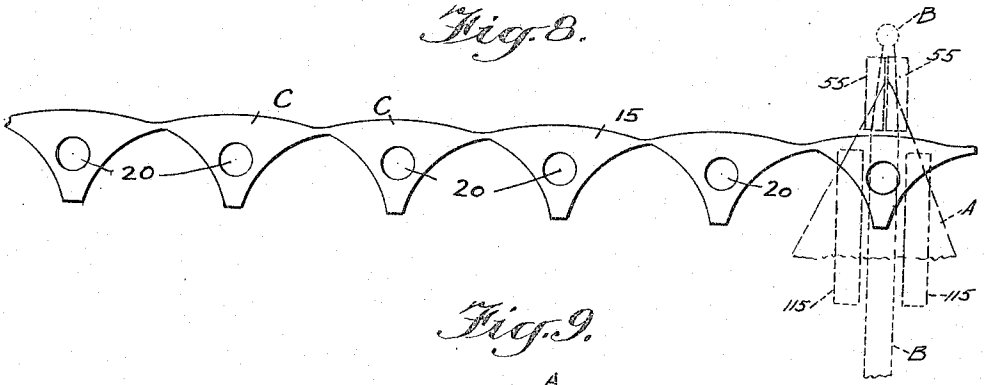

Fig. 9.

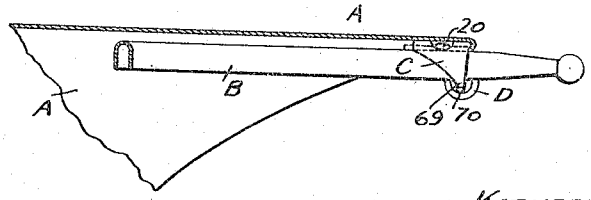

WITNESSES

Geo. W. Naylor

E. M. Murdock

INVENTORS

KATHERINE C. HOUT

CHARLES T. HENTSCHEL

BY Munn & Co.

ATTORNEYS

THE NORRIS PETERS CO., PHOTO-LITHO., WASHINGTON, D. C.

UNITED STATES PATENT OFFICE.

KATHERINE CANFIELD HOUT, OF ALBANY, AND CHARLES T. HENTSCHEL, OF SCHENECTADY, NEW YORK.

UMBRELLA-COVERING MACHINE.

1,135,803. Specification of Letters Patent. Patented Apr. 13, 1915.

Application filed June 30, 1914. Serial No. 848,189.

To all whom it may concern:

Be it known that we, KATHERINE C. HOUT, a citizen of the United States, and a resident of Albany, in the county of Albany and State of New York, and CHARLES T. HENTSCHEL, a citizen of the United States, and a resident of Schenectady, in the county of Schenectady and State of New York, have invented a new and Improved Umbrella-Covering Machine, of which the following is a full, clear, and exact description.

Among the principal objects which the present invention has in view are: to provide means for mechanically mounting on an umbrella frame a fabric cover; to provide means of the character mentioned to operate rapidly to provide means for manually controlling the periods of operation of said machine; and to provide fastening members for the cover and the outer or tip ends of the ribs of the umbrella frame, arranged in the form of a continuous strip to facilitate the feed of the fasteners.

Drawings.—Figure 1 is a side elevation of the head of a machine of the character mentioned constructed and arranged in accordance with the present invention; Fig. 2 is a front elevation of the head of a machine, showing in conjunction therewith a fragment of an umbrella frame and cover, said frame being in process of having said cover attached thereto; Fig. 3 is a general view of a machine constructed and arranged in accordance with the present invention, the view being taken from the front of the machine and showing in conjunction therewith an umbrella frame support and an umbrella frame mounted thereon; Fig. 4 is a detail view, on an enlarged scale, showing in vertical section the rib and cloth-holding device and dies for shaping the same; Fig. 5 is a detail view in horizontal section, taken on the line 5—5 in Fig. 4; Fig. 6 is a detail view showing the cloth supporting and feeding mechanism employed in the present invention; Fig. 7 is a detail view, on an enlarged scale, showing the forming dies for affixing holding clips upon the ribs of umbrellas; Fig. 8 is a detail view, on an enlarged scale, showing a fragment of a ribbon formed of united blanks constituting the clips; at the right of the drawing is shown by dotted lines the end of a cover section, the end of an umbrella rib, and supports for same; Fig. 9 is a detail view showing an end fragment of an umbrella rib, the cover therefor, and a clip constructed and arranged in accordance with the present invention.

Description.—As indicated in the companion application for improvements in umbrellas filed the 26th day of June 1914, said application being numbered 847,411, to which cross reference is here made, the cloth cover A is attached to the ribs B, and more particularly at the tips thereof, by means of metal clips C, the ends whereof are passed through and lapped within an eyelet D on each rib. The clips C are serially connected to form a strip or ribbon 15, which is continuously fed to the herein-described machine from a reel 14, to be by the operation of the machine individually severed from the ribbon, bent around the ends of the tips, and compressed rigidly thereon, with the umbrella extensions or ends of the clips superposed or lapped within the eyelets D.

With the above object in view, the strip or ribbon 15 is fed from a suitable source by means of a pin sprocket wheel 16 mounted, as best seen in Fig. 1 of the drawings, on a stud shaft 17 set out from a framing pedestal 18. The sprocket pins 19 with which said wheel is provided are spaced apart to coincide with the perforations 20 formed in the ribbon 15, one of said perforations being centrally disposed in each of the clips C of which said ribbon is formed. To support said ribbon under the wheel 16, idle pulleys 21 are rotatively mounted on shafts 22, likewise set out from the pedestal 18. These pulleys, in conjunction with an arm 23, form a table or support for the ribbon 15, to guide the same below a hammer-die 24. The successive clips C are delivered under said hammer-die by an intermittent movement of the ribbon 15, which is imparted thereto as the result of the action of a ratchet wheel 25. The ratchet wheel 25 is fixedly connected with the sprocket wheel 16, and is so arranged that the pawl 26 engages each successive tooth of the ratchet wheel when the rocking arm 27 is permitted to lift until stopped by a pin 28, where it is held. The rocking arm 27 is pivotally mounted on the pin 29, and is moved by a coil spring 30, one end of which engages a pin suitably disposed in the pedestal 18, and the other end of which engages a corresponding pin set out from the side of the

arm 27. A spring 31, which is coiled on the pin 32 that forms the pivot for the pawl 26, performs a like office for said pawl, with the effect that the tooth end of the pawl is maintained in engagement with the ratchet wheel 25.

The rocking arm 27 depends for movement upon the plunger 33. The plunger 33 is provided with an adjustable collar 34, which engages and depresses the rounded head 35 with which the arm 27 is provided, when said collar is lowered to its normal position as shown in Fig. 1 of the drawings. This position of the plunger 33 is that which is assumed when the hammer-die 24 is lifted to its passive position raised out of the path of the ribbon 15, while the same is being fed forward by the operation of the arm 27, pawl 26, ratchet wheel 25, and sprocket wheel 16.

The plunger 33 is pivotally connected with a manually operative foot treadle 36. Said treadle is pivotally mounted in a floor stand 119, as best shown in Fig. 3 of the drawings. When the treadle 36 is depressed, the plunger 33 is lifted to rock the primary section 37 of a walking beam, the secondary section 38 of which is directly connected with a slide plate 39 by means of a wrist pin 40. The primary section 37 is pivoted to the plunger 33 by a corresponding wrist pin 41. The sections 37 and 38 are maintained in their normal disposition by means of a compression spring 42. The ends of said spring are placed in cups or sockets formed in the juxtaposed faces of laterally-projecting bearing shoulders 43 and 44, as shown best in Fig. 1 of the drawings. The spring 42 is maintained under tension by a stop pin 45, shown in dotted lines in Fig. 1, which is set out from the side of the section 37 in the path of, to be engaged by, a tailpiece 46 formed on the section 38.

The sections 37 and 38 are rotatively mounted on a pin 47 mounted in bearings formed in the ends of brackets 48 and 49, projected from the opposite sides of the frame 18, as shown best in Fig. 2 of the drawings. When the plunger 33 is lifted by operating a treadle 36, the plate 39 is simultaneously depressed, the sections 37 and 38 preserving their initial relation, the shoulders 43 and 44 being separated as shown in Fig. 1 of the drawings. The plate 39 is guided for vertical movement on the head 50, and in a housing formed by guide strips 51.

Mounted fixedly on the plate 39 are bearing brackets 52, in which a short pivot shaft 53 is mounted. The pivot shaft 53 is provided as a support for folding arms 54, seen best in Figs. 1, 2 and 4 of the drawings. The arms 54 have at the lower extremity of each, a finger 55. Intermediate the finger 55 and the shaft 53, the arm is outwardly bowed to form a recess 56. Intermediate the recess 56 and the finger 55 of each of the arms 54 is a straight section, which, when the plate 39 and arms 54 connected therewith are raised to their upper position, rests on a fending roller 57, as best shown in Fig. 1 of the drawings. In the lowered position of said plate and arms, the roller 57 rests in the recess 56, permitting the spring 58 which is coiled on the shaft 53, to rock the arms 54 on said shaft, and move the fingers 55 under the ribbon 15 and below the hammer-die 24. As hereinafter described, this operation is accompanied by the folding of the angle of the cloth cover A under the ribbon 15, which position is clearly shown in Fig. 4 of the drawings.

The arms 54 are mounted on the shaft 53 in a manner to permit the arms to rock in planes parallel with the axis of said shaft, or, in other words, to rock so that the fingers 55 are permitted to approach and separate in correspondence with the operation of the die-forming members and the accumulation of cloth incident to the operation. To this end, the arms are provided with extensions 59 loosely joined by a connecting pin 60, about which a compression spring 61 is coiled, which spring normally spreads or separates the ends of the extensions 59.

From the foregoing, it will be seen that the operation of the arms 54 is to a certain extent controlled by the springs 58 which move the fingers 55 under the clips C or ribbon 15, and by the spring 61 which normally operates to contract said fingers or to permit the expansion thereof when going into or withdrawing from service disposition.

In the operation of the present machine, the hammer-die 24 is not brought into action until after the fingers 55 have passed under the end of the cloth cover A and the ribbon 15. The lost motion between the plate 39 and the hammer-die 24 is provided for by a slot 62, through which extends the wrist-pin 40, as seen best in Fig. 2 of the drawings. In the position of the machine shown in Fig. 1 of the drawings, the hammer-die 24 is suspended from the pin 40 and the end of the section 38, the section 38 being positively lifted by the engagement of the pin 45 with the tailpiece 46. The lower or cutting and shaping end of the die is lifted above, and out of contact with the ribbon 15 or the cloth cover A when passed thereover. When, however, the plate 39 and the pin 40 begin their descent, the die 24 settles upon the cloth and ribbon, to steady the same preliminary to the engagement of the cloth by the fingers 55. Here the die 24 pauses, while the plate 39 continues its descent, and the arms 54 and fingers 55 perform as much of their operation as above described, which results in placing said

plate, said die, and said arms and fingers in the position shown in Fig. 4 of the drawings. At this moment, the pin 40, having traveled through the slot 62, rests in the bottom thereof, and thereafter compels the hammer-die to travel in company with the plate 39, the relation between the end of the hammer-die 24 and the fingers 55 being maintained.

From the position above noted, the ribbon 15 and the cover A supported thereon are depressed until the ribbon rests on a die plate 63, the arm 23 yielding to permit this action. The die plate 63 is provided at the forward end with a shearing edge 64, which operates in conjunction with a shearing edge 65 to sever the endmost of the clips C from the ribbon 15, as shown best in Fig. 7 of the drawings.

As indicated, the hammer-die 24 is employed to shape the clip, as well as sever the same from the ribbon 15. To this end, it is provided with a semi-circular recess 66, shaped to infold an umbrella rib B, the clip C, and the double fold of the cloth cover A, and to clamp the same on said rib while the end thereof is supported in grooves formed in a pillar block 67 and a face-plate 68, as shown best in Fig. 4 of the drawings. The members are thus folded after the clip has been severed from the ribbon 15. In thus bending the clip C, as shown in Fig. 7 of the drawings, the lateral extensions 69 and 70 thereof are disposed in pendent position at opposite sides of the rib B, and opposite the eyelet D with which the same is provided. To turn the extensions 69 and 70 under the rib B and into the eyelet D is the function of the horizontal die jaws 71 and 72.

The jaws 71 and 72 rest in grooves 73 formed in guide blocks 74. The grooves 73 in one of the blocks is covered by the die-plate 63, while for the other block the same office is performed by a plate 75. The die jaws 71 and 72 are reciprocated in said grooves 73, for which purpose they are both pivotally connected to toggle levers 76. The levers 76 are pivoted on shafts 77 disposed between the pillar block 67 and the face-plate 68. Said levers are each provided with a knuckle extension 78 to fit sockets 79 formed in the opposite jaws of a toggle-like plate 80. The plate 80 is pivotally mounted by a pin 81 on a lever 82. The lever 82 is fulcrumed on a stud shaft 83 set out from the pedestal 18, as shown best in Fig. 1 of the drawings. The free end of the lever 18 has a foot 84, the upper and lower edges whereof engage the flattened surfaces of adjustable collars 85 and 86.

The collar 85 is disposed as shown in Fig. 1 of the drawings, to depress the foot 84 and thereby lift the plate 80 with which the lever 82 is provided, with the result that the jaws 71 and 72 are retracted, when in the operation of the machine the plunger 33 is depressed and the sections 37 and 38 are rocked to lift the hammer-die 24 and plate 39, all of which may be seen in Fig. 1 of the drawings. The collar 86 is adjusted so that it engages the foot 84 subsequent to the descent of the hammer-die 24 to the position shown in Fig. 7 of the drawings, upon the rib B, the effect of which is to turn the extensions 69 and 70 into the path of the punch points 87 and 88 with which the jaws 71 and 72 are provided.

Coincident with the lift of the plunger 33 and the section 37 connected therewith, after the engagement by the collar 86 with the foot 84, the spring 42 is compressed to permit the independent movement of the section 37 as indicated. Coincident with the movement of the section 37 which compresses the spring 42, is the depression of the link plate 80 and the knuckle extension 78 of the toggle levers 76. The movement of the toggle levers 76, under this impulse, forces the jaws 71 and 72 toward the rib B against the extensions 69 and 70 of the clip C held thereon. It will be noted that the extension 70 is relatively longer than the extension 69. This insures the overriding of the extension 69 by the extension 70 as the two extensions are forced through the opening of the eyelet D. To press or set the extensions 69 and 70 in the position above described and as shown by dotted lines in Fig. 7, the jaws 71 and 72 are shaped to form curved faces 89, which conform to the curvature of the outer surface of said extensions when disposed as indicated by the dotted lines in said figure.

When now the operator releases the foot treadle 36, the plunger 33 descends, and the collar 85, engaging the lever 82, reverses the operation of the toggle levers 76 as above described, and retracts the jaws 71 and 72, leaving the clips C clamped rigidly in position on the ribs B, with the under fold of the cloth cover A held firmly between said clips and said ribs. Coincident with the depression of the plunger 33, the section 37 is rocked independently on the pin 47 until the pin 45 engages the tailpiece 46. The continued fall of the plunger 33 and collar 85 operates to rock the section 38 and lift the plate 39 and the hammer-die 24 connected therewith, in the order named.

The operation above described has resulted in affixing the cover A to one of the ribs B, and the operator now adjusts the umbrella frame and cover for the operation to be performed on the next succeeding rib and cover.

Preliminary to subjecting the frame and cover therefor to the operation above described, they are disposed in operative position, using for that purpose a spreading

hoop 90 and a resilient girdle 91. The girdle 91 retains the ribs in position on the hoop 90. The frame so disposed is then placed in operative position on the machine, the handle end of the cane being inserted through openings 92 and 93 formed in the pillar block 67 and the face-plate 68, respectively. The ferrule end of said cane is placed through a guide perforation in a steady-rest 94, which is fixedly secured on a reach bar 95 extended from the table 96 of the machine, as best shown in Figs. 2 and 3 of the drawings. The ferrule end of the cane E is pressed upon by a pressure plate 97 at the end of a plunger 98. The plunger 98 is slidably mounted in the head of a standard 99, which standard is adjustably mounted on the reach bar 95. The compression of a spring 100 is sufficient to permit the ferrule end of the cane E to be moved toward the standard 99 sufficiently to allow for the adjustment of the ribs B inside of the gage 101.

To register the ribs successively with the hammer-die 24 and mechanism for affixing the clip C, we provide in the pillar-block 67 and the face-plate 68, a groove 102, said groove being disposed in line with the end of the gage 101. The gage 101 is pivotally mounted on a pin 103, having bearings in tabs 104. A tailpiece is provided for said gage, through which a knurled-headed screw 105 extends to bear against the surface of the face-plate 68. By manipulating the screw 105, the eyelets D may be accurately adjusted to a working position corresponding with the feed of the clips C and of the extensions 69 and 70 thereof, and with the path of the punch points 87 and 88. The successive ribs are placed in the groove 102 manually.

As each successive rib is disposed in the groove 102, the cloth cover A is adjusted with reference thereto. While the cover is so adjusted, the operator releases the latch head 106 from engagement with the latch 107 by depressing the handle 108, which extends to the outer side of the face-plate 68. Upon releasing the latch 107, a slide plate 109 is lifted by springs 110, said springs being anchored to pins 111 and 112. The pin 112 extends through bearings in tabs 113, on which is pivotally mounted a slotted arm 114, employed to hold the cloth cover A in position while being attached to the rib by one of the clips forming the ribbon 15.

The arm 114 is bifurcated at the upper portion thereof, forming saw-toothed presser-teeth 115, which, when lifted, engage the cloth cover A, as shown best in Fig. 2 of the drawings, and press the same upward in contact with the lower face of the head 50, to thereafter prevent the cloth from being withdrawn from the line of operation of the hammer-die 24. The arm 114 is maintained in its forward position by a coil spring 116, which is wrapped on the pin 112, as shown best in Figs. 2 and 6 of the drawings.

At the extreme ends of the feet 115 are formed fingers 117, which rest under and form supports for the ribbon 15, and more particularly for the clip which is to be used for fastening the cover. When, in the operation of the machine, the plate 39 and arms 54 mounted thereon are depressed, the fingers 55 on said arms 54, when passing under the ribbon 15 to carry the corner of the umbrella under the clip which is to be used for fastening said cover, engage the fingers 117 and move backward the feet 115, the saw-teeth on said feet permitting the retractive action without disturbing the cloth cover A. The spring 116 also accommodates this action on the part of the arm 114. When the hammer-die 24 is depressed to its lowest position, the arm 114 and plate 109 are depressed thereby, to lower the latch 107 into engagement with the latch-head 106. The latch-head 106 is permitted to yield by a spring 118 with which it is provided and which normally depresses said latch and the handle 108 into the position as shown best in Fig. 2 of the drawings. The plate 109 and arm 114 are thereafter held in the lowered or out-of-service position, until, in the next operation, the cover A has been drawn over the new rib B, when the operator, by depressing the handle 108, again releases the latch 107 and plate 109 to permit the springs 110 to lift the feet 115 into engagement with the cover A. The above operation is repeated until each of the ribs B is secured by a clip C to the cloth cover A, when the umbrella is passed on to the next succeeding operation. To do this, the plate 97 is retracted, and the cane E of the umbrella frame lifted from its seat in the steady-rest 94. The umbrella cane E is then withdrawn from the openings 92 and 93, the girdle 91 is removed from the cloth cover A, and the spreading hoop 90 is displaced from its engagement with the ribs B, for transfer to the next or succeeding umbrella frame.

Operation.—When using the machine herein disclosed for covering an umbrella, the operation thereof is as follows:—The ribs B of the frame are spread, the hoop 90 is placed in operative position to spread said ribs, and the cover A is adjusted on the frame, being drawn over the hinge ring. The girdle 91 is passed over the cover A, and disposed as shown best in Fig. 2 of the drawings, in service relation to the hoop 90. The handle end of the cane E is then passed through the openings 92 and 93, and the ferrule of the cane is adjusted in said steady-rest 94 against the plate 97. The first of the series of ribs A is then adjusted in

the groove 102, the tip of said rib resting against the gage 101, being pressed there by the spring 100. The screw 105 is manipulated to adjust the gage 101, until the eyelet D on the rib B is moved to the path of the punch points 87 and 88 of the jaws 71 and 72. One of the points of the umbrella cover formed coincident with the seam of two of sections thereof, is now drawn forward over the tip of the rib. In this position, the handle 108 is depressed, permitting the springs 110 to raise the presser-feet 115 against the cloth cover A, to thereafter hold the same in operative position. The fingers 117 simultaneously extend under the ribbon 15 to temporarily support the end clip C of said ribbon 15. The operator now presses the treadle 36, to lift the plunger 33. The initial action consists in depressing the arms 54 until the recess 56 thereof passes over the roller 57, when the fingers 55 having depressed the overhanging portion of the cover A, now turn the same under the end clip C, moving backward the presser-feet 115 and replacing the fingers 117. Coincident with this substitution of the fingers 55 for the fingers 117, the hammer-die 24 begins its descent in unison with the plate 39, arms 54 and fingers 55. When the hammer-die 24 reaches a position where the clip C is pressed thereby upon the rib B, and immediately subsequent to the severing of the clip from the ribbon 15, the roller 57 engages the upper side of the recess 56, so that the further movement of the arms 54, plate 39 and die 24 effects an outward movement of the arms 54, to remove the fingers 55 from below the cloth and clip and out of the path of the lateral extensions 69 and 70 of said clips. The continued movement referred to carries the hammer-die 24 to the position shown in Fig. 7 of the drawings, where said lateral extensions 69 and 70 of said clip are disposed in vertical position and in the space just vacated by the fingers 55. In this position, the hammer-die 24, plate 39 and parts connected therewith are brought to rest, while the jaws 71 and 72 are laterally moved to engage and set the extensions 69 and 70, enfolding the end of the rib B to rest within the eyelet D. This is coincident with the termination of the upward stroke of the plunger 33. The operator, now releasing the treadle 36, permits the plunger to fall. Coincident with the fall of the plunger 33, the jaws 71 and 72 are first spread, to be followed immediately by the rise of the plate 39, carrying with it the arms 54, the hammer-die 24 remaining in its depressed position and resting, as in Fig. 7, on the cloth cover A. When the recess 56 now passes over the roller 57, the spring 58 moves inward the fingers 55, which now strike upon the face of the hammer-die 24, and so pass thereover until the arms are lifted to the position shown in Fig. 2 of the drawings, where the roller 57 rests under the straight extension of the arms 54 adjacent the fingers 55. When the pin 40, having reached the upper end of the slot 62, engages the hammer-die 24, the same is lifted to the position shown in Fig. 1 of the drawings. The operation is now complete. Each of the ribs of the umbrella is thus treated until all are fastened to the cover in this manner. The umbrella is then removed from the machine in the manner above set forth.

Claims:

1. A machine as characterized, comprising a guiding mechanism for umbrella frames, for successively disposing in operative position the tips of ribs of said frames; a shaping die for bending a holding clip over each of said ribs; means for feeding said clips between said die and said ribs; means for folding the edge of an umbrella cover on said clips to extend between said clips and said ribs; and means for depressing said die on said clips and ribs, for clamping said clips about said ribs.

2. A machine as characterized, comprising a guiding mechanism for umbrella frames, for successively disposing in operative position the tips of ribs of said frames; a shaping die for bending a holding clip over each of said ribs; means for feeding said clips between said die and said ribs; means for folding the edge of an umbrella cover on said clips to extend between said clips and ribs; and manually controlled mechanism for depressing said die on said clips and said ribs, for turning said clips under said ribs.

3. A machine as characterized, comprising a guiding mechanism for umbrella frames, for successively disposing in operative position the tips of ribs of said frames; a shaping die for bending a holding clip over each of said ribs; means for feeding said clips between said die and said ribs; a folding mechanism adapted to engage and fold the cover between said clips and said ribs, said means being operable in advance of said shaping die; and a driving mechanism for operating said folding mechanism and said shaping die in timed relation.

4. A machine as characterized, comprising a guiding mechanism for umbrella frames, for successively disposing in operative position the tips of ribs of said frames; a shaping die for bending a holding clip over each of said ribs; means for feeding said clips between said die and said ribs; a folding mechanism for turning the cloth of a cover resting between said clips and said ribs, and embodying a sliding plate and arms pivotally mounted thereon, adapted to fold the cloth in advance of the engagement

thereof by said die; means for moving said arms to encircle said ribs preliminary to the engagement of said ribs and cloth resting thereon, by said die; means for swinging said arms to and from the operating path of said die and in timed relation thereto, for removing said arms from the path of the clips as turned by said die; and a cutting member for said clips to separate the same from a continuous supply thereof preliminary to being shaped by said die.

5. A machine as characterized, comprising a guiding mechanism for umbrella frames, for successively disposing in operative position the tips of ribs of said frames; a shaping die for bending a holding clip over each of said ribs; means for feeding said clips between said die and said ribs; a folding mechanism for turning the cloth of a cover resting between said clips and said ribs, and embodying a sliding plate and arms pivotally mounted thereon, adapted to fold the cloth in advance of the engagement thereof by said die; means for moving said arms to encircle said ribs preliminary to the engagement of said ribs and cloth resting thereon, by said die; means for swinging said arms to and from the operating path of said die and in timed relation thereto, for removing said arms from the path of the clips as turned by said die; a cutting member for said clips to separate the same from a continuous supply thereof preliminary to being shaped by said die; and a yielding support for said clips, to hold the same in position to be engaged by said die and while being moved to the cutting position thereof.

6. A machine as characterized, comprising a guiding mechanism for umbrella frames, for successively disposing in operative position the tips of ribs of said frames; a shaping die for bending a holding clip over each of said ribs; means for feeding said clips between said die and said ribs; a folding mechanism for turning the cloth of a cover resting between said clips and said ribs, embodying a sliding plate and arms pivotally mounted thereon, adapted to fold the cloth in advance of the engagement thereof by said die; means for moving said arms to encircle said ribs preliminary to the engagement of said ribs and cloth resting thereon, by said die; means for swinging said arms to and from the operating path of said die, in timed relation thereto, for removing said arms from the path of the clips as turned by said die; a cutting member for said clips, to separate the same from a continuous supply thereof preliminary to being shaped by said die; a plurality of laterally-operated shaping members to close the pendent ends of said clips in folded relation upon said ribs; and a driving mechanism for said folding mechanism, said shaping die and said folding members, said mechanism being adapted to operate said members successively and in the order named.

7. A machine as characterized, comprising a guiding mechanism for umbrella frames, for successively disposing in operative position the tips of ribs of said frames; a shaping die for bending a holding clip over each of said ribs; means for feeding said clips between said die and said ribs; a folding mechanism for turning the cloth of a cover resting between said clips and said ribs, embodying a sliding plate, and arms pivotally mounted thereon, adapted to fold the cloth in advance of the engagement thereof by said die; means for moving said arms to encircle said ribs, preliminary to the engagement of said ribs and cloth resting thereon, by said die; means for swinging said arms to and from the operating path of said die, in timed relation thereto, for removing said arms from the path of the clips as turned by said die; a cutting member for said clips to separate the same from a continuous supply thereof preliminary to being shaped by said die; and a feeding mechanism for said clips when arranged in ribbon form, embodying an intermittent feeding member operatively engaging said ribbon.

8. A machine as characterized, comprising a guiding mechanism for umbrella frames, for successively disposing in operative position the tips of ribs of said frames; a shaping die for bending a holding clip over each of said ribs; means for feeding said clips between said die and said ribs; a folding mechanism for turning the cloth of a cover resting between said clips and said ribs, embodying a sliding plate, and arms pivotally mounted thereon, adapted to hold the cloth in advance of the engagement thereof by said die; means for moving said arms to encircle said ribs preliminary to the engagement of said ribs and cloth resting thereon, by said die; means for swinging said arms to and from the operating path of said die, in timed relation thereto, for removing said arms from the path of the clips as turned by said die; a cutting member for said clips, to separate the same from a continuous supply thereof preliminary to being shaped by said die; a plurality of laterally-operated shaping members to close the pendent ends of said clips in folded relation upon said ribs; a driving mechanism for said folding mechanism, said shaping die and said folding members, said mechanism being adapted to operate said members successively and in the order named; and a feeding mechanism for said clips when arranged in ribbon form, embodying a pin sprocket wheel operatively engaging said clips, and an intermittent feed therefor operable by said driving mechanism.

9. A machine as characterized, comprising a guiding mechanism for umbrella

frames, for successively disposing in operative position the tips of ribs of said frames; a shaping die for bending a holding clip over each of said ribs; means for feeding said clips between said die and said ribs; a folding mechanism for turning the cloth of a cover resting between said clips and said ribs, embodying a sliding plate, and arms pivotally mounted thereon, adapted to fold the cloth in advance of the engagement thereof by said die; means for moving said arms to encircle said ribs preliminary to the engagement of said ribs and cloth resting thereon, by said die; means for swinging said arms to and from the operating path of said die and in timed relation thereto, for removing said arms from the path of the clips as turned by said die; a cutting member for said clips to separate the same from a continuous supply thereof preliminary to being shaped by said die; a yielding support for said clips, to hold the same in position to be engaged by said die and while being moved to the cutting position thereof; and a feeding mechanism for said clips, embodying a pin sprocket wheel, the pins whereof are adapted to enter perforations in said clips, a ratchet wheel fixedly connected with said pin sprocket wheel, and a pawl operable by said driving mechanism to rotate said sprocket wheel to feed said clips after said die is lifted above the path of said clips.

10. A machine as characterized, comprising a reciprocating, cutting and shaping die; an operating table therefor having a shearing edge formed therein; a rest for an umbrella rib for holding the same in registered relation to said table; a ribbon formed by a series of clips; means for feeding said ribbon in the path of said die; a yielding support for said ribbon, to normally hold the same above said table; means for holding the cloth cover of an umbrella in adjusted relation to said clips prior to the operation of said die; and means for turning the ends of said clip under said rib when turned below said table.

11. A machine as characterized, comprising a reciprocating cutting and shaping die; an operating table therefor having a shearing edge formed therein; a rest for an umbrella rib, for holding the same in registered relation to said table; a ribbon formed by a series of clips; means for feeding said ribbon in the path of said die; a yielding support for said ribbon, to normally hold the same above said table; means for holding the cloth cover of an umbrella in adjusted relation to said clips prior to the operation of said die; means for turning the ends of said clip under said rib when turned below said table; and means for adjusting said ribs and the eyelets thereon to receive the ends of said clips.

12. A machine as characterized, comprising a reciprocating cutting and shaping die; an operating table therefor, having a shearing edge formed therein; a rest for an umbrella rib, for holding the same in registered relation to said table; a ribbon formed by a series of clips; means for feeding said ribbon in the path of said die; a yielding support for said ribbon, to normally hold the same above said table; means for holding the cloth cover of an umbrella in adjusted relation to said clips prior to the operation of said die; means for turning the ends of said clip under said rib when turned below said table; a gage for setting the ribs of said umbrella; and means manually operable for adjusting said gage.

In testimony whereof we have signed our names to this specification in the presence of two subscribing witnesses.

KATHERINE CANFIELD HOUT.
CHARLES T. HENTSCHEL.

Witnesses:
ALBERT B. VAN VOAST,
GRACIA E. ERNEST.

Copies of this patent may be obtained for five cents each, by addressing the "Commissioner of Patents Washington, D. C."