Aug. 15, 1944. C. F. LEFEVER 2,355,809

POPGUN

Original Filed Oct. 26, 1942 2 Sheets-Sheet 1

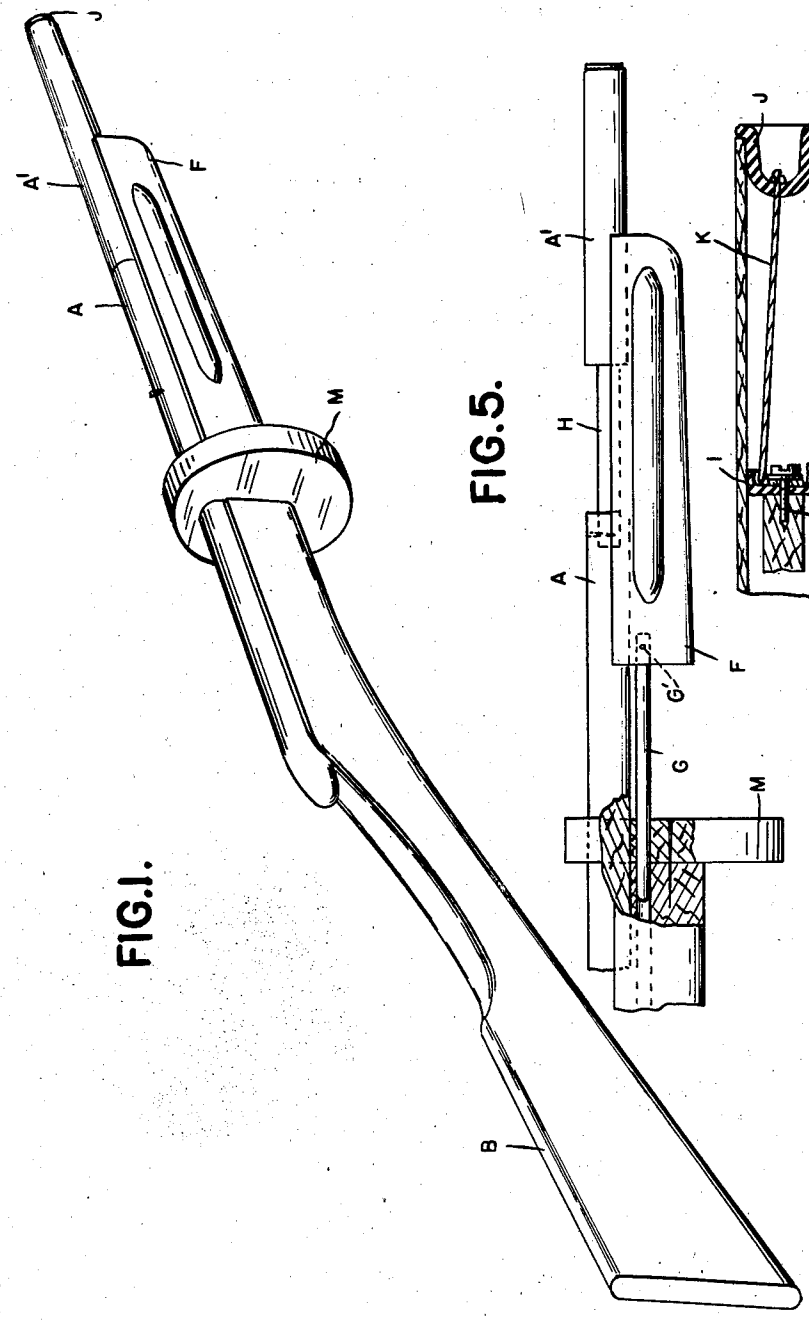

FIG.1.

FIG.5.

FIG.6.

INVENTOR.
CHARLES F. LEFEVER
BY
Whittemore Hulbert & Belknap
ATTORNEYS

Aug. 15, 1944. C. F. LEFEVER 2,355,809

POPGUN

Original Filed Oct. 26, 1942 2 Sheets-Sheet 2

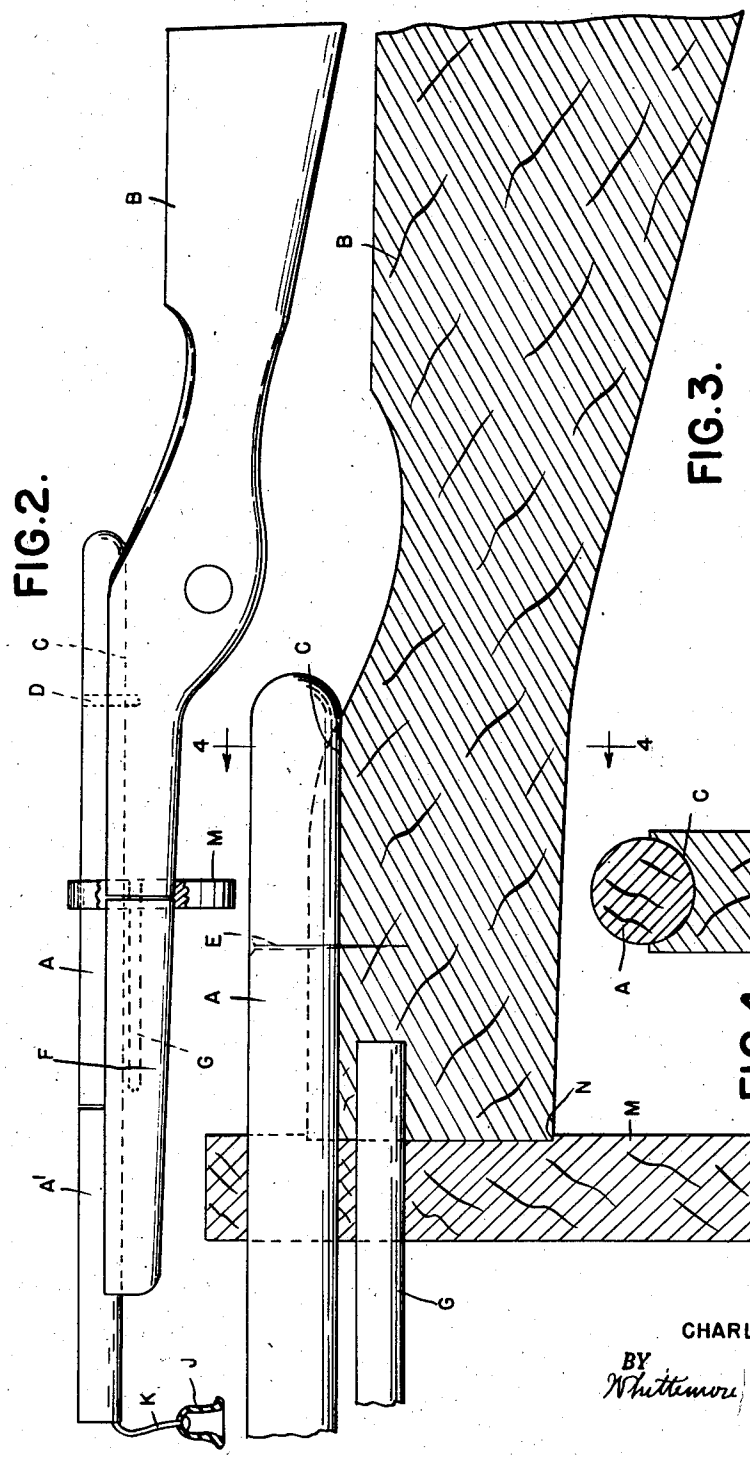

FIG. 2.

FIG. 3.

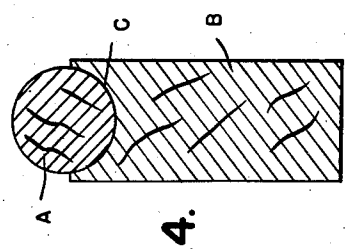

FIG. 4.

INVENTOR.
CHARLES F. LEFEVER
BY Whittemore, Hulbert & Belknap
ATTORNEYS

Patented Aug. 15, 1944 2,355,809

UNITED STATES PATENT OFFICE

2,355,809

POPGUN

Charles F. Lefever, Plymouth, Mich., assignor to Daisy Manufacturing Company, Plymouth, Mich., a corporation of Michigan

Original application October 26, 1942, Serial No. 463,395. Divided and this application April 19, 1943, Serial No. 483,631

4 Claims. (Cl. 124—11)

The invention relates to toy guns and the present application forms a division of my earlier application, Serial No. 463,395, filed October 26, 1942. It is the primary object of the invention to obtain a construction which can be made from non-metallic elements. Due to the present national emergency, metal is not available to any great extent for the manufacture of toys. It is, however, possible to obtain screws and some other parts, if these are needed. I have, therefore, designed a construction in which the gun is formed chiefly of wood but, nevertheless, has the same appearance as guns previously made from metal parts.

In the drawings:

Fig. 1 is a perspective view of my improved gun;

Fig. 2 is a side elevation thereof;

Fig. 3 is a longitudinal section showing the junction between the stock and barrel;

Fig. 4 is a section on line 4—4, Fig. 3;

Fig. 5 is an elevation of the forward portion of the barrel and pump action; and

Fig. 6 is a longitudinal section through the barrel and pop mechanism.

A is the barrel of the gun which is formed of a round wooden rod. B is the stock which has a channel upper edge portion C for receiving the barrel which is attached thereto either by a dowel D or any other suitable fastener such as a nail E. F is a member slidable along the barrel forward of the stock to simulate a pump action. This member is grooved along its upper edge to fit about the barrel, which latter is formed in two sections, the forward section A' being attached to the member F to move therewith. The member F is guided by a pin G extending forward from the stock and engaging a bore in the member F as shown in Figs. 2 and 3, or secured to the member F by a cross pin G' and engaging a bore in the stock as shown in Fig. 5. The barrel section A' has a bore extending longitudinally therethrough, and the barrel section A is provided with a rod H which extends forward into this bore and which is provided at its forward end with a cup-shaped piston I preferably formed of leather. J is a stopper also preferably formed of cupped leather, and K is a flexible cord which connects the member J with the rod H. Preferably this cord is attached to the rod by a screw L which also secures the cupped piston I.

With the construction as described, whenever the pump handle F is slid forward, this through the cord K will draw the stopper J into the muzzle end of the barrel which it tightly fits. The rearward movement of the handle F will cause the piston I to compress the air in the barrel and eventually dislodge the stopper J with the pop simulating a single shot. To give the appearance of a rapid-fire mechanism or a so-called "tommy gun," a circular disc M is positioned at the forward end of the stock giving the appearance of a cartridge magazine. This disc is also preferably slightly recessed as indicated at N to receive the forward end of the stock and to conceal the joint therebetween. The disc is also bored for the passage therethrough of the barrel A and pin G.

What I claim as my invention is:

1. In a toy gun, the combination with a stock, of a false barrel formed of two aligned sections, the rear section being solid and secured to said stock, and the forward section having a longitudinal bore therethrough to constitute the barrel of a popgun, a plunger secured to said rear section and extending into the bore of said forward section, a stopper for the forward end of said barrel, and a pump action handle secured to said forward section of the barrel and slidably engaging the rear section thereof.

2. In a toy gun, the combination with a stock of a wooden barrel formed in aligned sections, the rear section being secured to said stock and projecting forward therefrom, and the forward section having a longitudinal bore therethrough and constituting the barrel of a popgun, a plunger secured to said rear section to project within the barrel of said forward section, a stopper for the forward end of said forward section, a flexible connection between said stopper and plunger for drawing the latter into engagement with said barrel, and a pump action handle secured to said forward section of the barrel and slidable upon the rear section thereof, adapted when moved forward to engage said stopper with said barrel and when moved rearward to eject said stopper by air compressed within said barrel.

3. A toy gun formed chiefly of wood, including a stock, a barrel formed of two aligned sections, the rear section being solid and seated in a groove in the upper edge portion of said stock, being also rigidly secured thereto, the forward section of said barrel having a bore extending longitudinally therethrough and constituting the true barrel of a popgun, a plunger secured to the rear section of said barrel extending forward into the bore of said forward section, a stopper for the forward end of said barrel, a pump action handle secured to said forward section of the barrel and grooved on its upper edge to slidably engage said rear section of the barrel, and a guide pin

extending between said handle and stock being secured to the one and slidably engaging a bore in the other.

4. In a toy gun, the combination of a stock, of a barrel formed of aligned sections, the rear section being secured to said stock to extend forward therefrom, and the forward section having a longitudinally extending bore to constitute the barrel of a popgun, a plunger secured to said rear section and extending into the bore of said forward section, a pump action handle secured to said forward section and slidable in relation to said rear section, a stopper for the forward end of said forward section formed of a pressed leather cup and a flexible connection between said stopper and said plunger.

CHARLES F. LEFEVER.