US 20190212109A1

(19) **United States**

(12) **Patent Application Publication** (10) **Pub. No.: US 2019/0212109 A1**

Gibson et al. (43) **Pub. Date: Jul. 11, 2019**

(54) **MODULAR FIRING RANGE**

(71) Applicant: **Cubic Corporation**, San Diego, CA (US)

(72) Inventors: **Martin Gibson**, Surrey (GB); **Kyle Jordan Bowles**, Odiham (GB)

(73) Assignee: **Cubic Corporation**, San Diego, CA (US)

(21) Appl. No.: **16/354,967**

(22) Filed: **Mar. 15, 2019**

Related U.S. Application Data

(62) Division of application No. 16/171,948, filed on Oct. 26, 2018.

(60) Provisional application No. 62/577,638, filed on Oct. 26, 2017.

Publication Classification

(51) **Int. Cl.**
F41J 11/02 (2006.01)
F41J 13/02 (2006.01)

(52) **U.S. Cl.**
CPC ***F41J 11/02*** (2013.01); ***F41J 13/02*** (2013.01)

(57) **ABSTRACT**

A modular firing range includes a first subset of modular containers that form a first end of the firing range. The first subset includes outer walls that define the first end of the firing range and side walls that define a portion of a side of the firing range. A second subset of modular containers form a second end of the firing range. The second subset includes outer walls that define the second end of the firing range and side walls that define a portion of the side of the firing range. A third subset of modular containers is coupleable between the first subset and the second subset to form a medial portion of the firing range. The third subset includes outer walls that define a portion of the side of the firing range. The firing range includes an armored outer perimeter that provides complete ballistic containment in all directions.

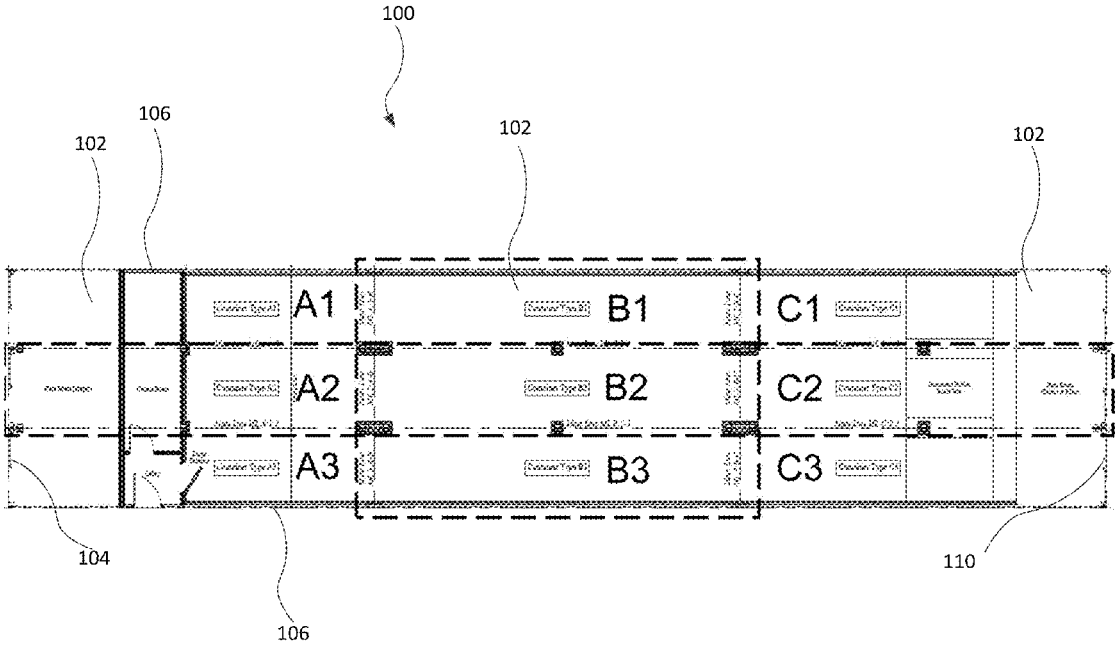

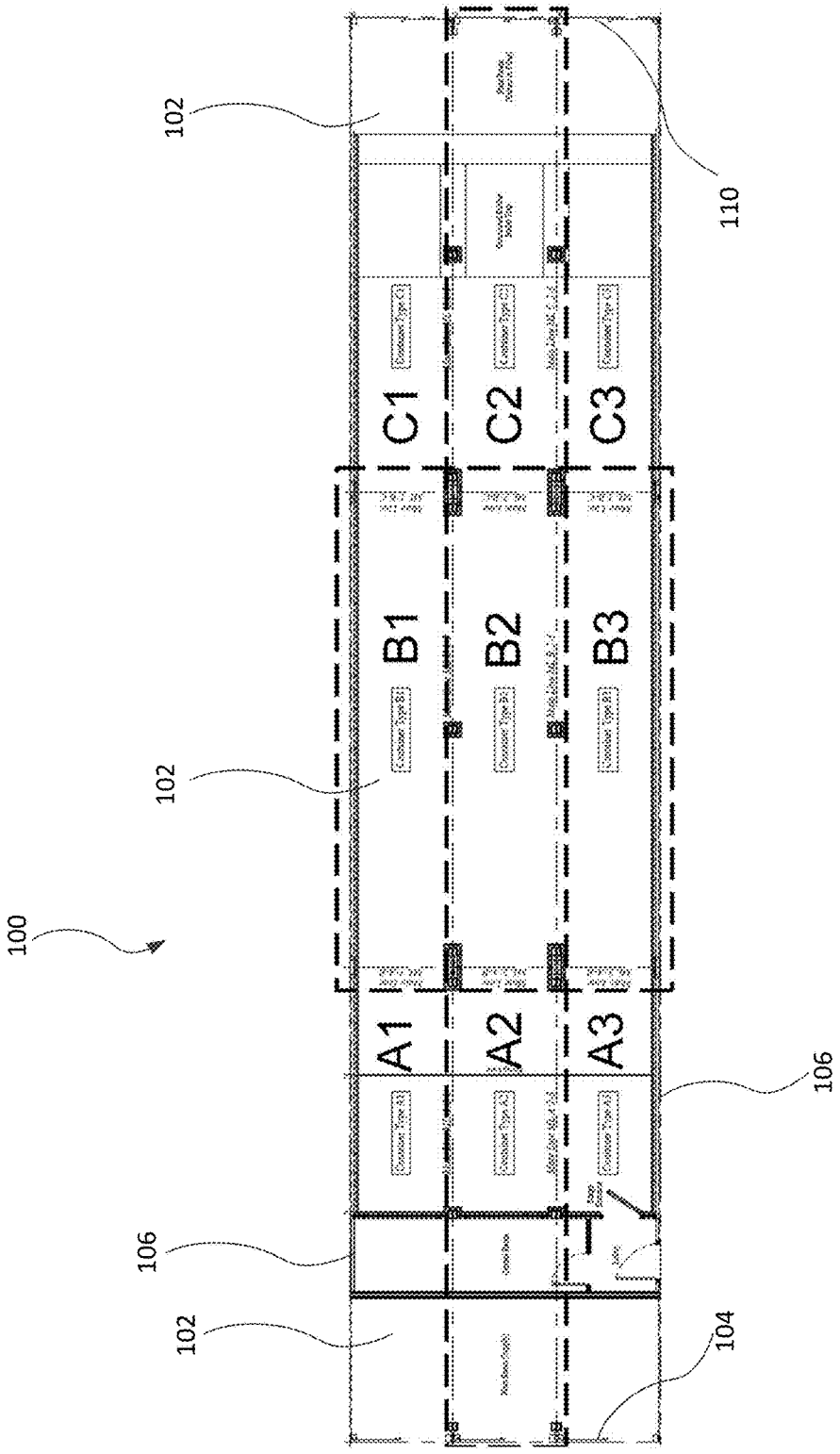

FIG. 1

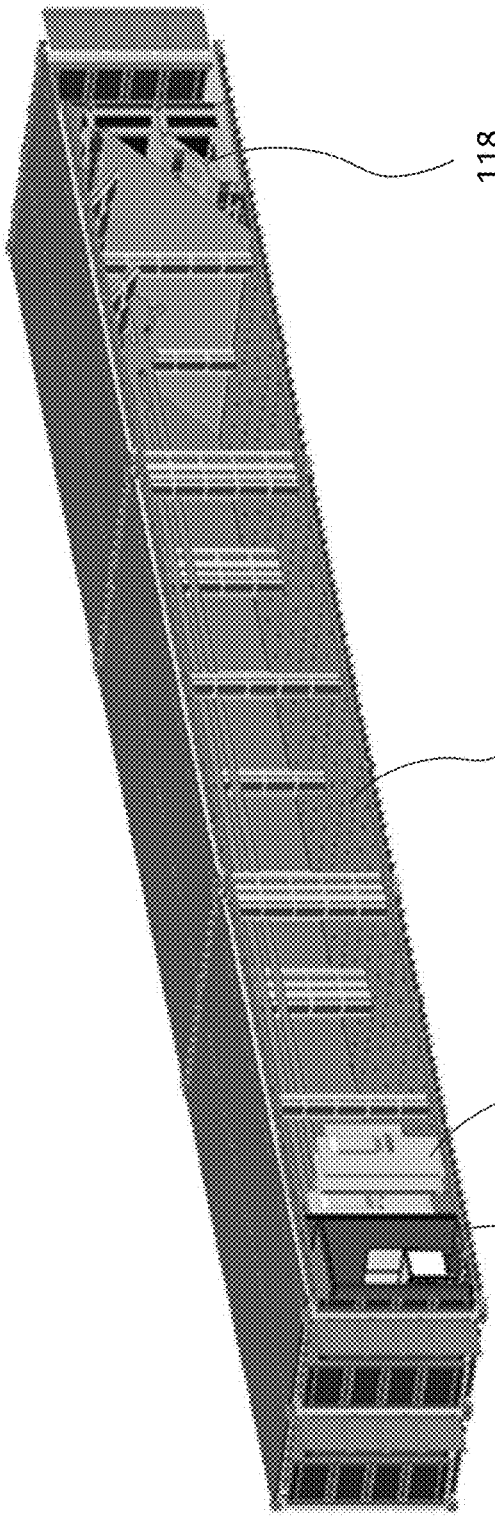

FIG. 2

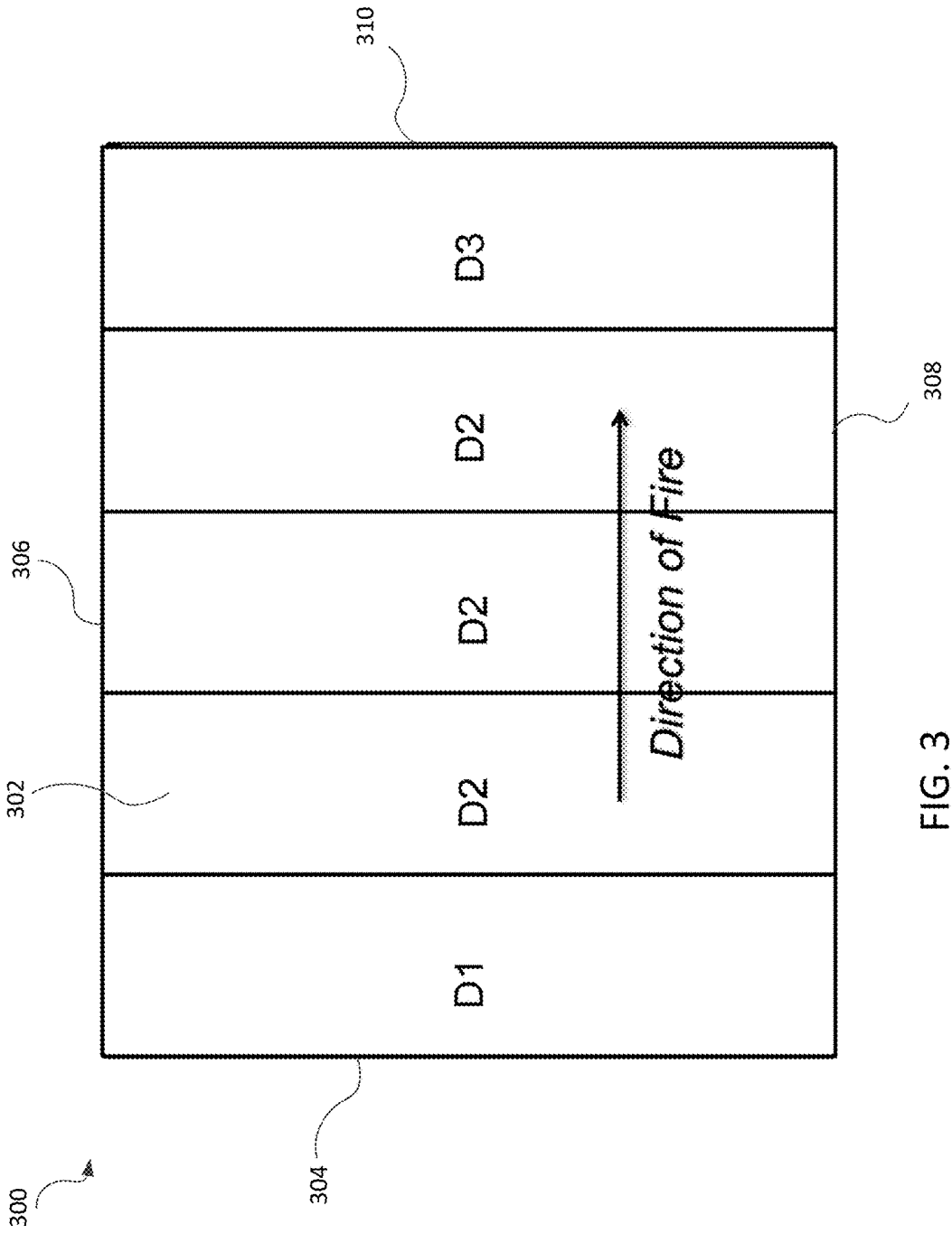

FIG. 3

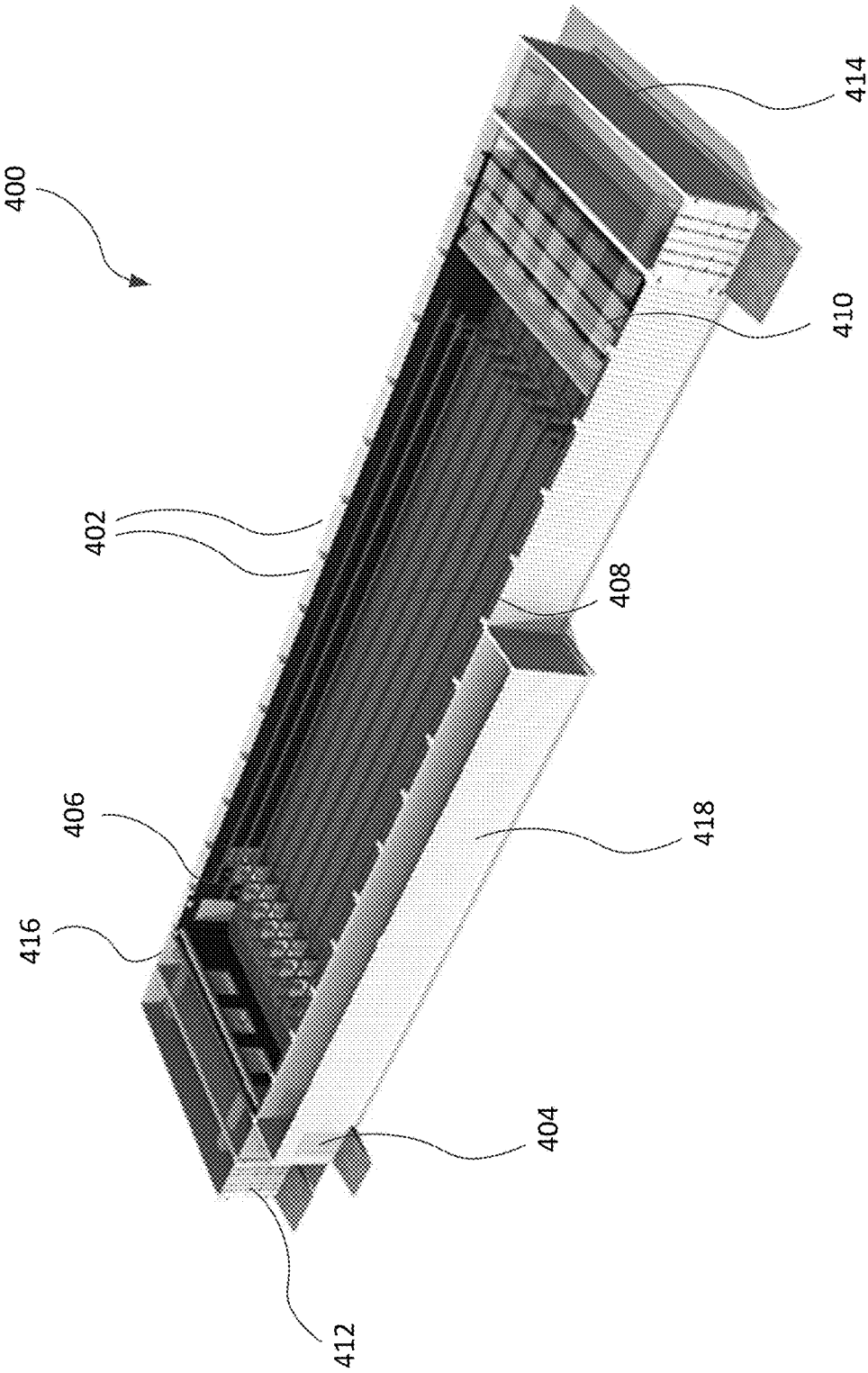

FIG. 4

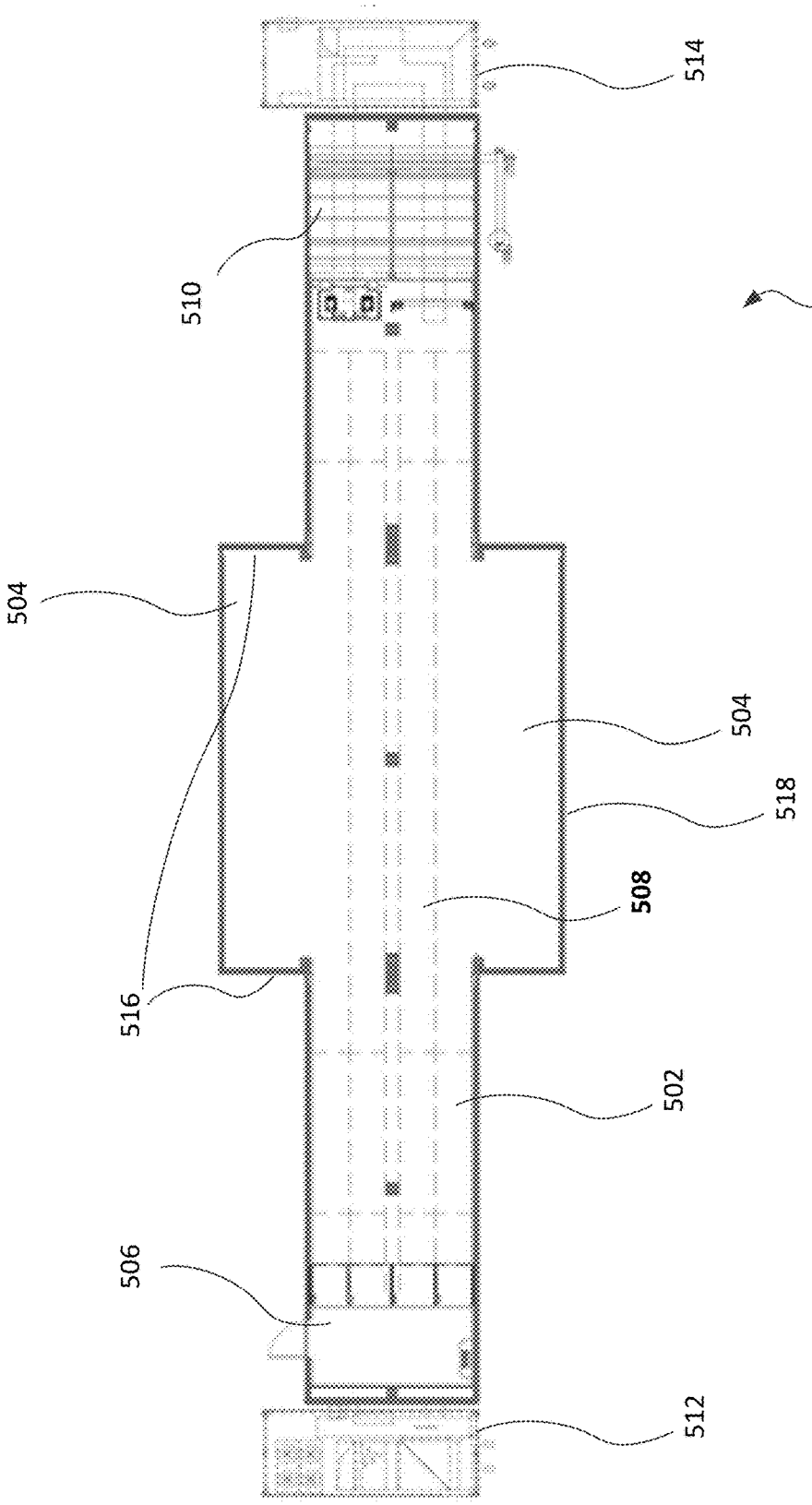

FIG. 5

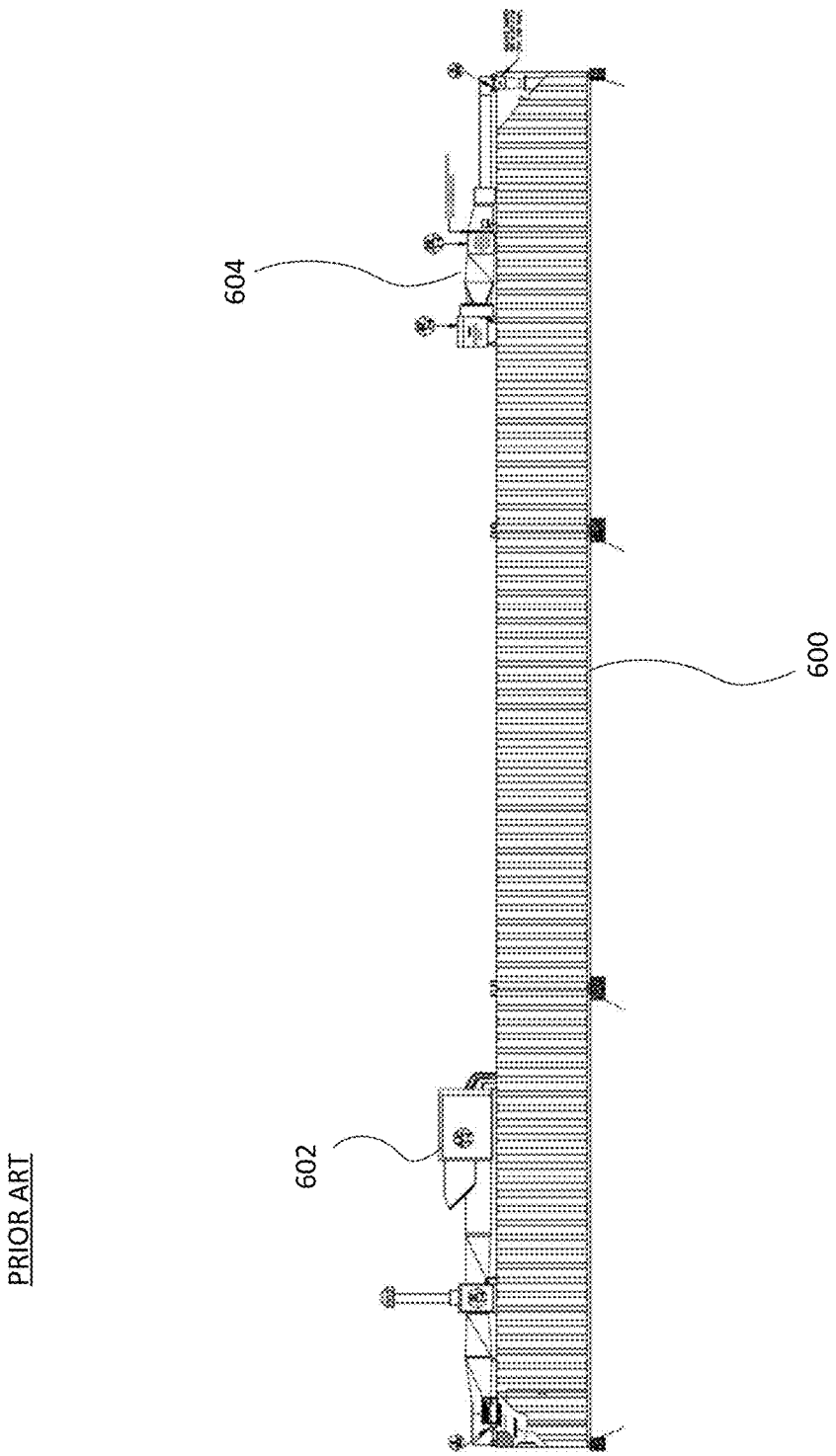

FIG. 6

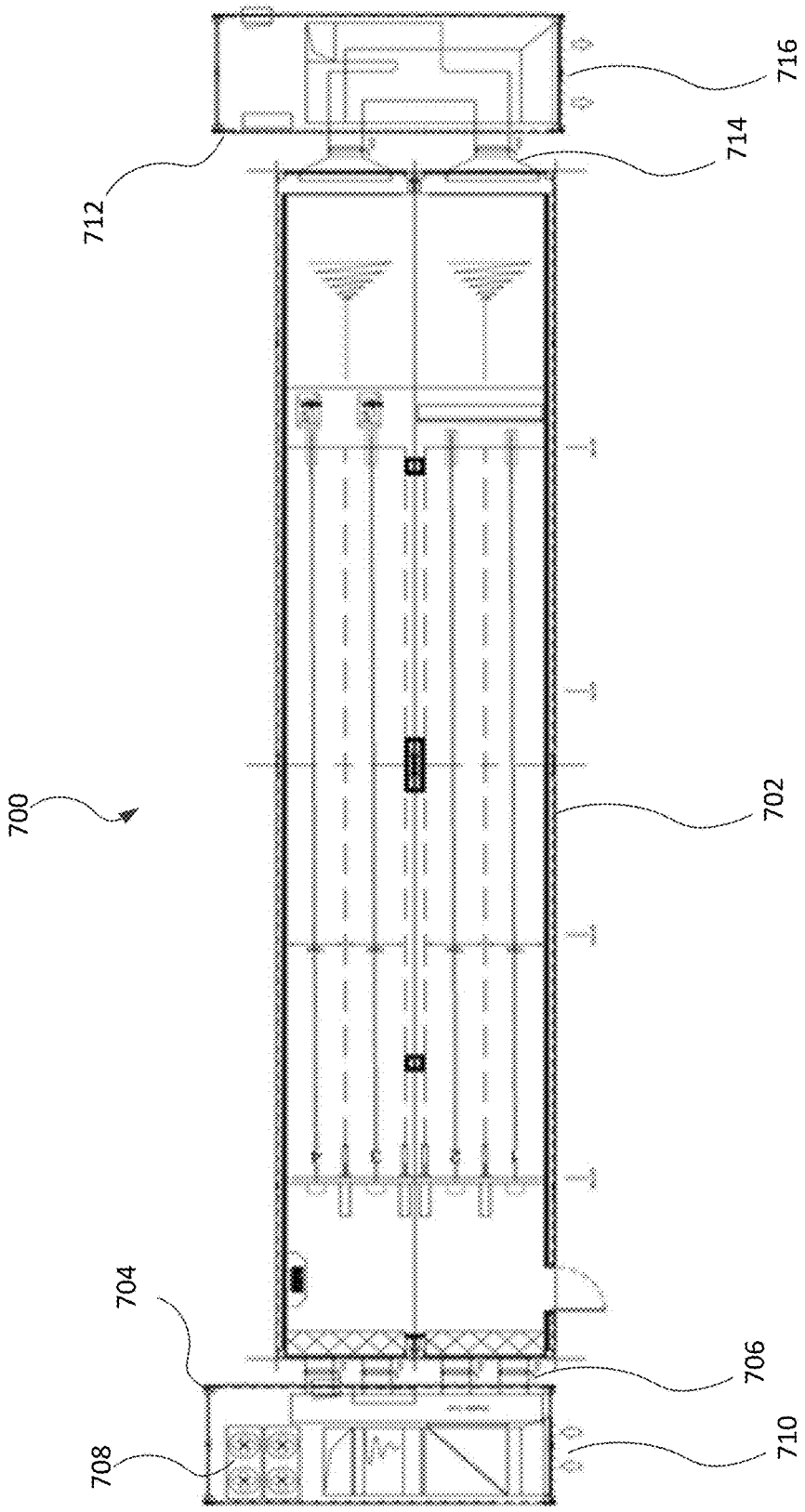

FIG. 7

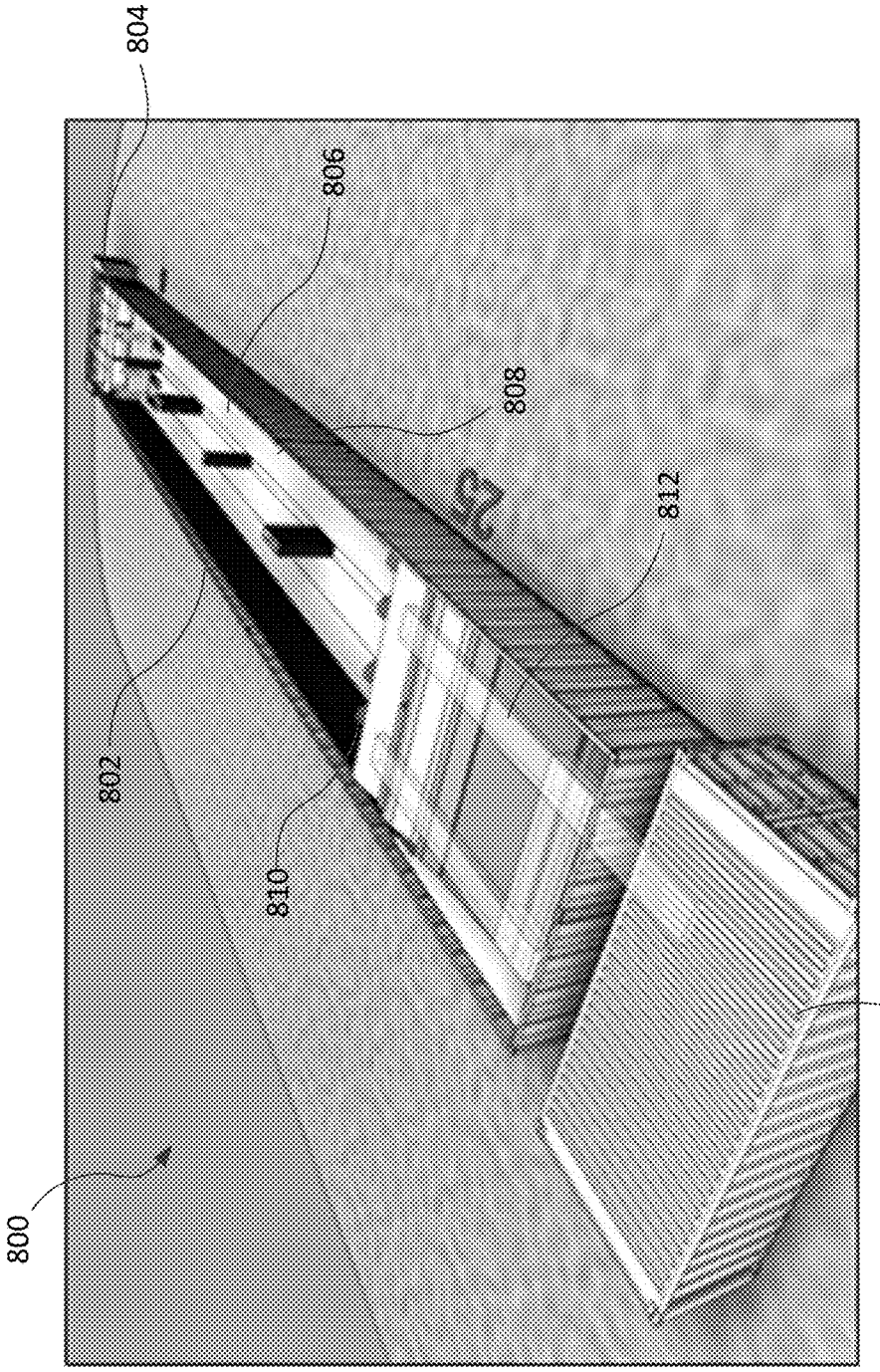

FIG. 8A

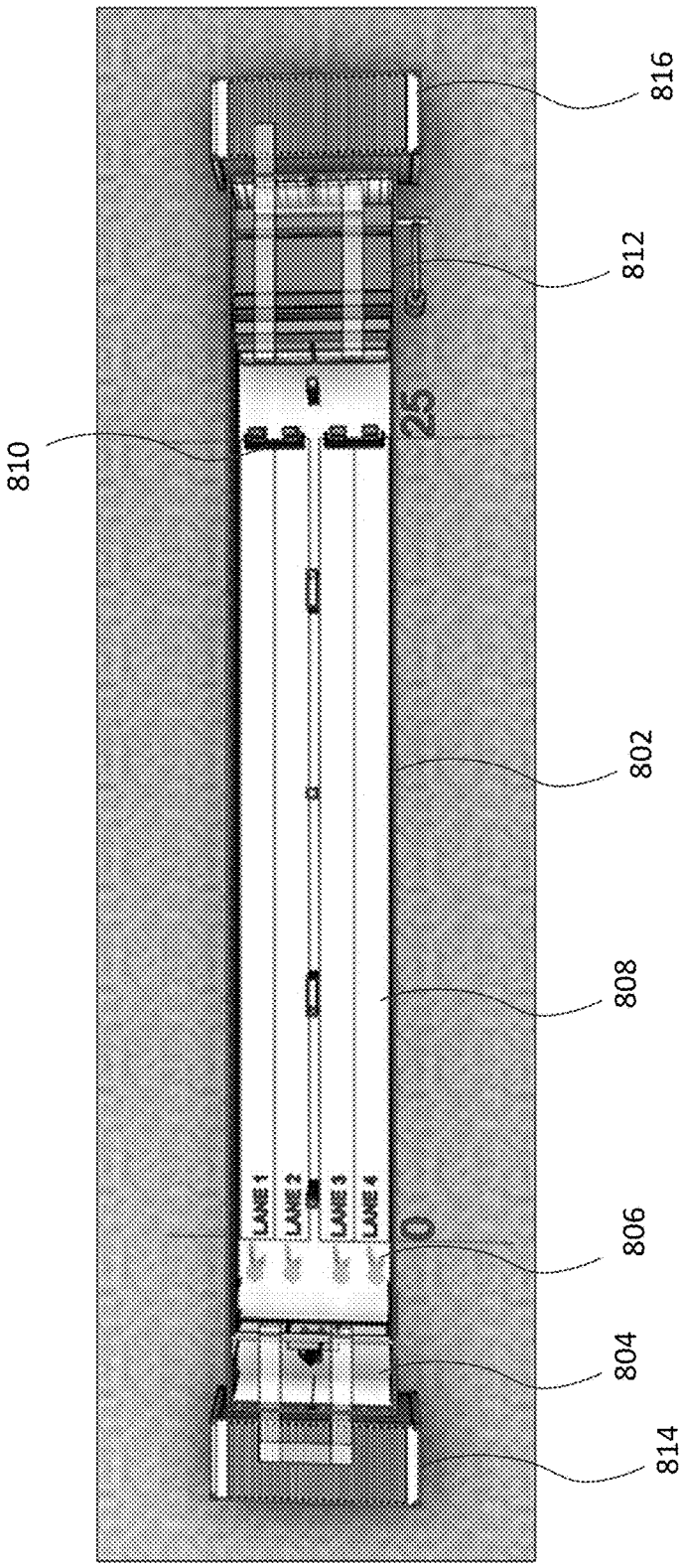
816
800
812
810
802
808
806
804
814
LANE 1
LANE 2
LANE 3
LANE 4
25
0

FIG. 8B

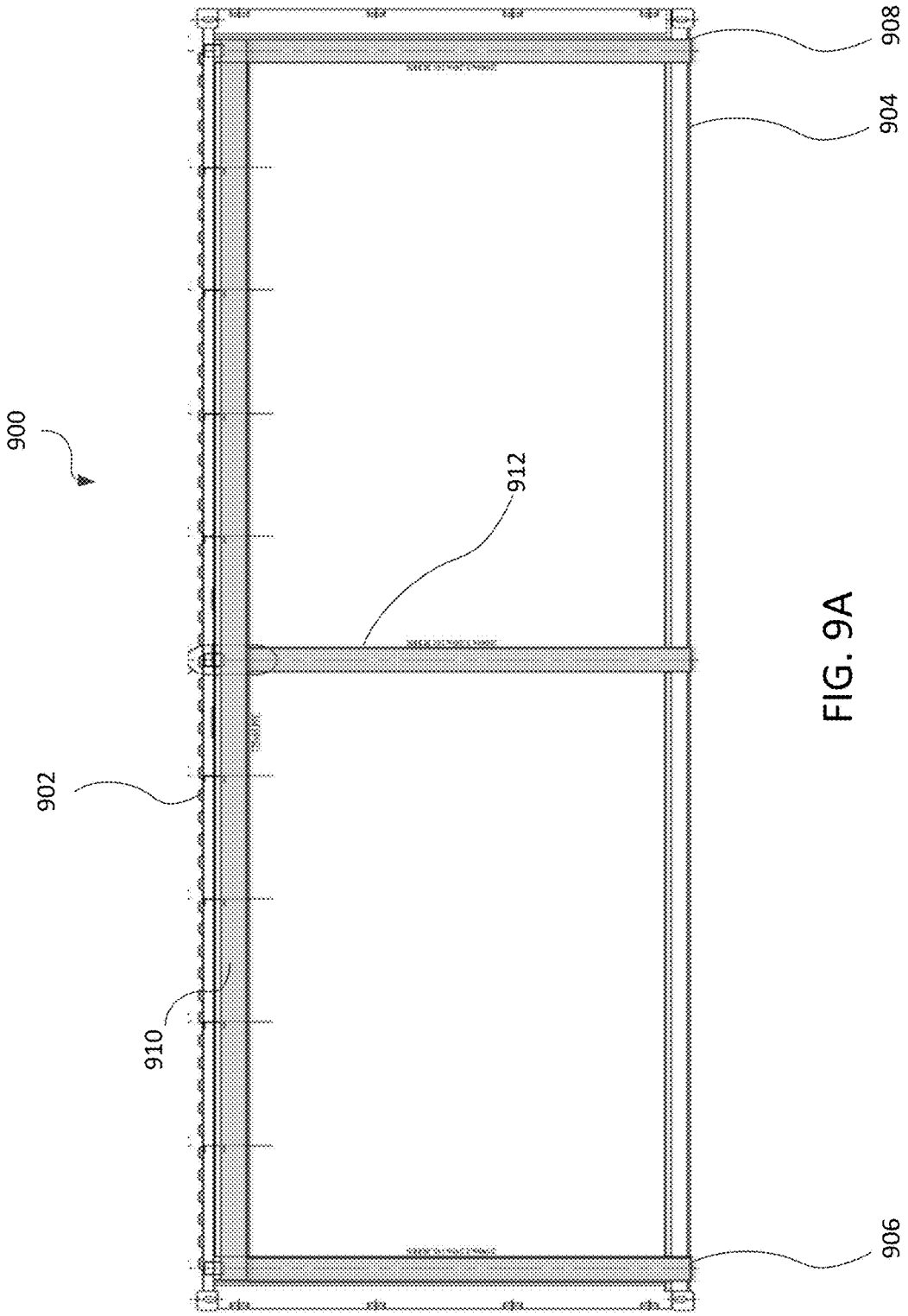

FIG. 9A

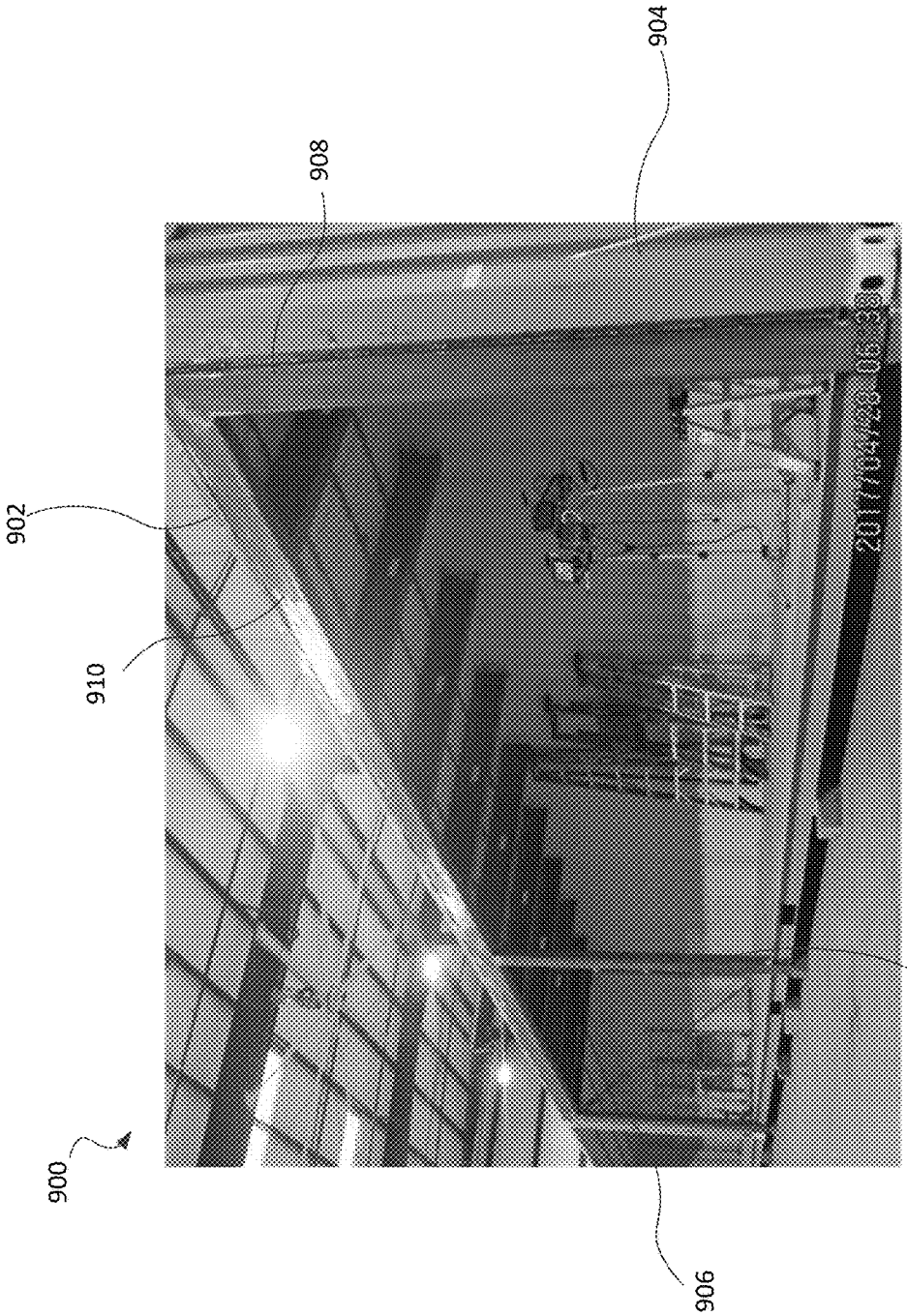

FIG. 9B



FIG. 10

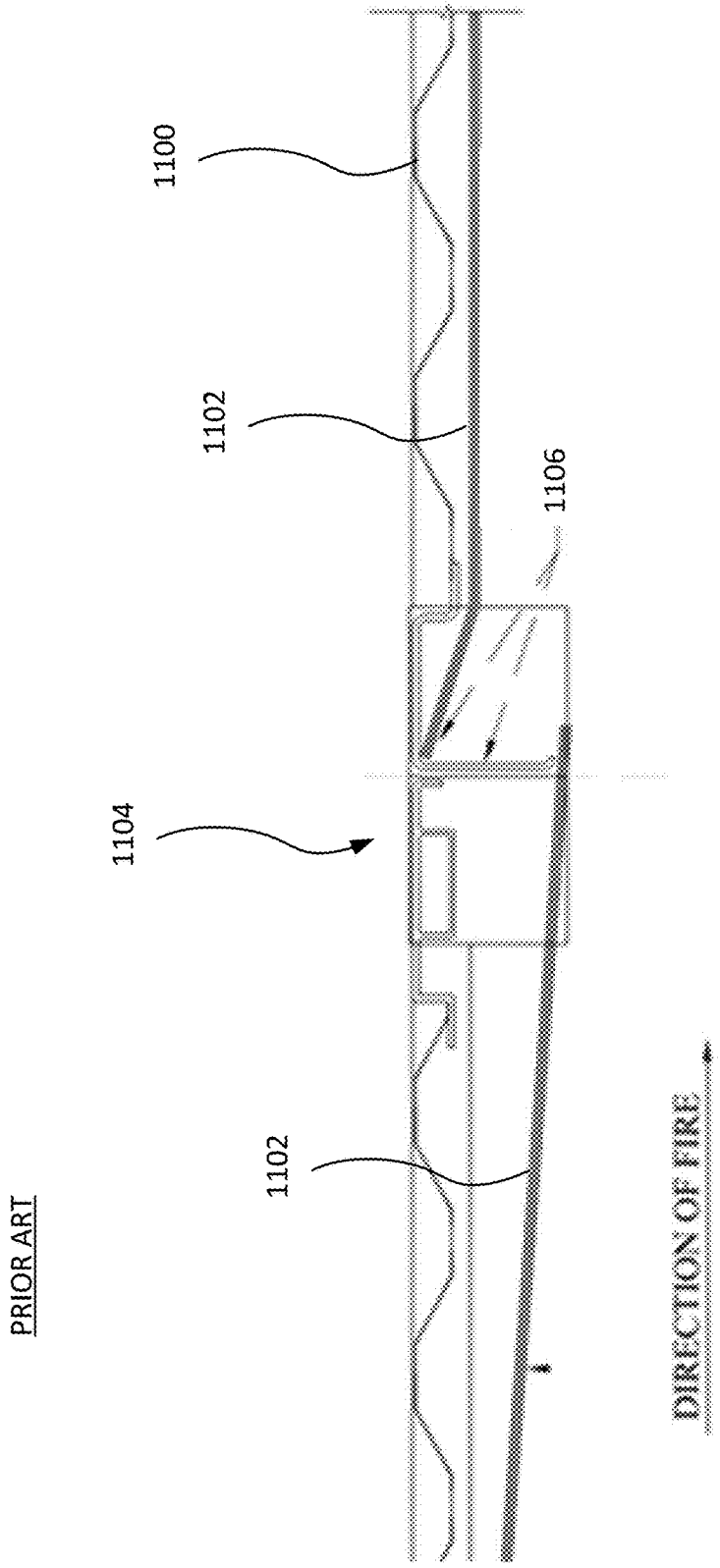

FIG. 11

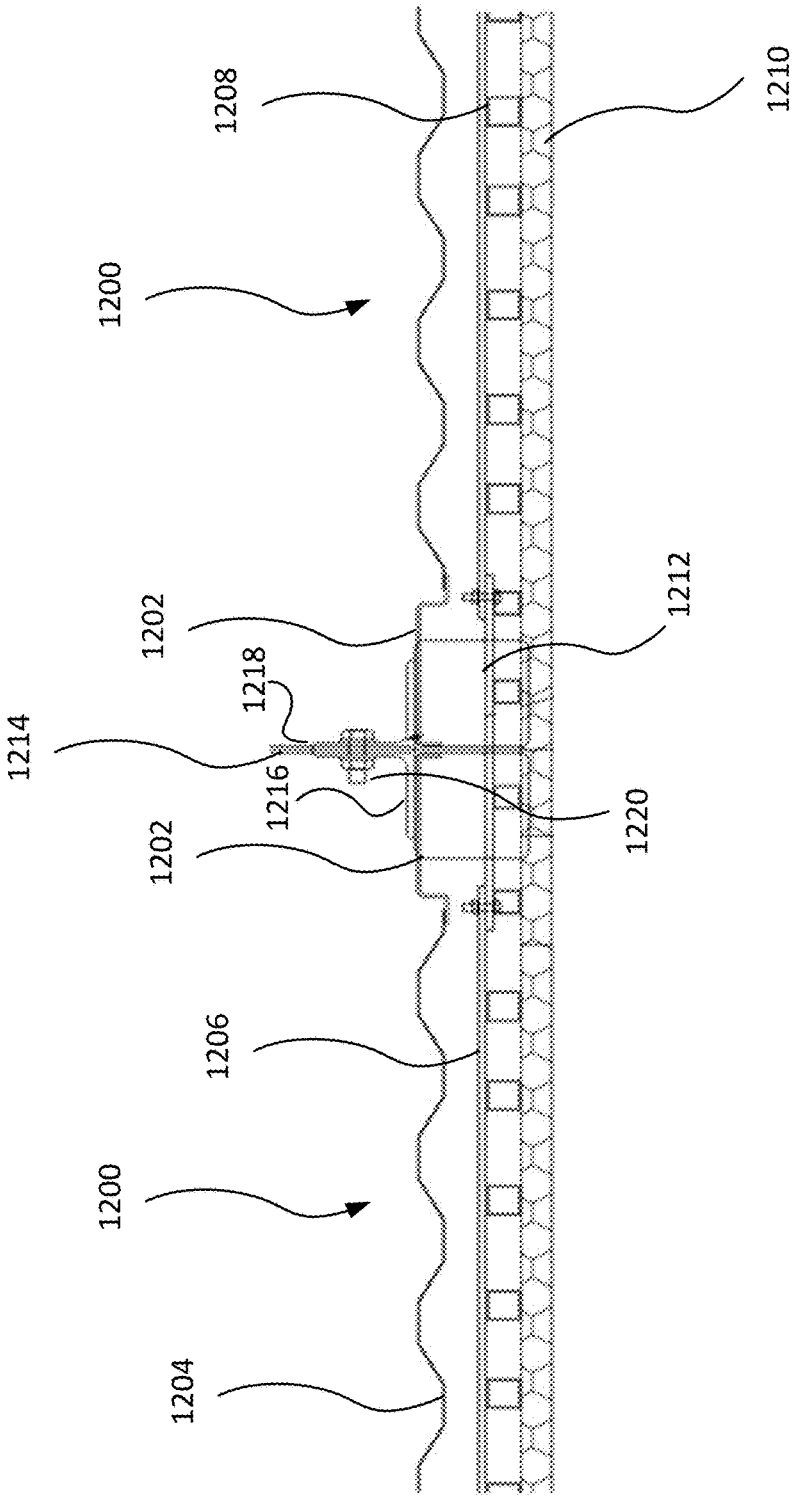
1208
1210
1200
1202
1212
1218
1214
1216
1220
1202
1206
1200
1204

FIG. 12

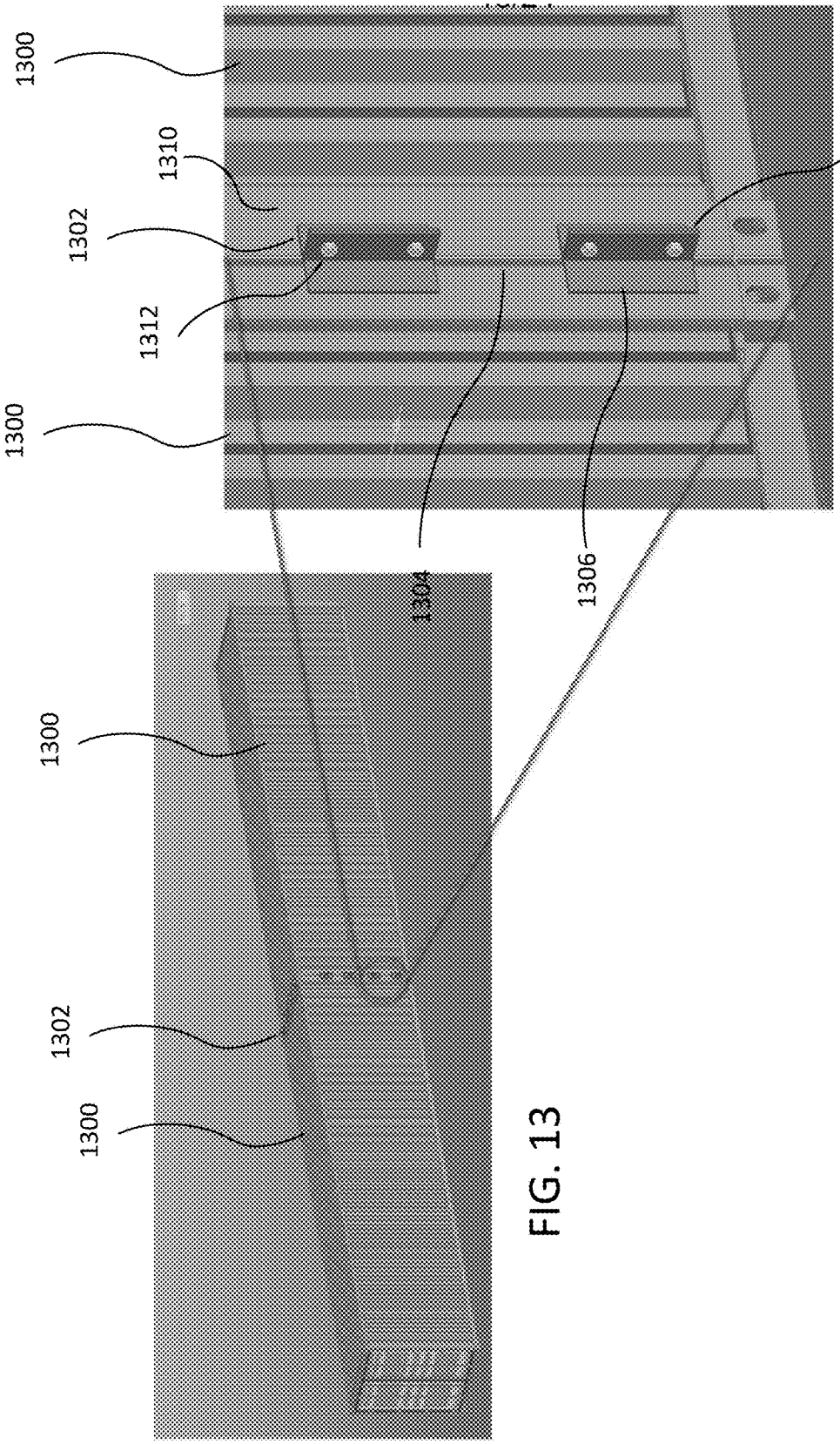

FIG. 13A

FIG. 13

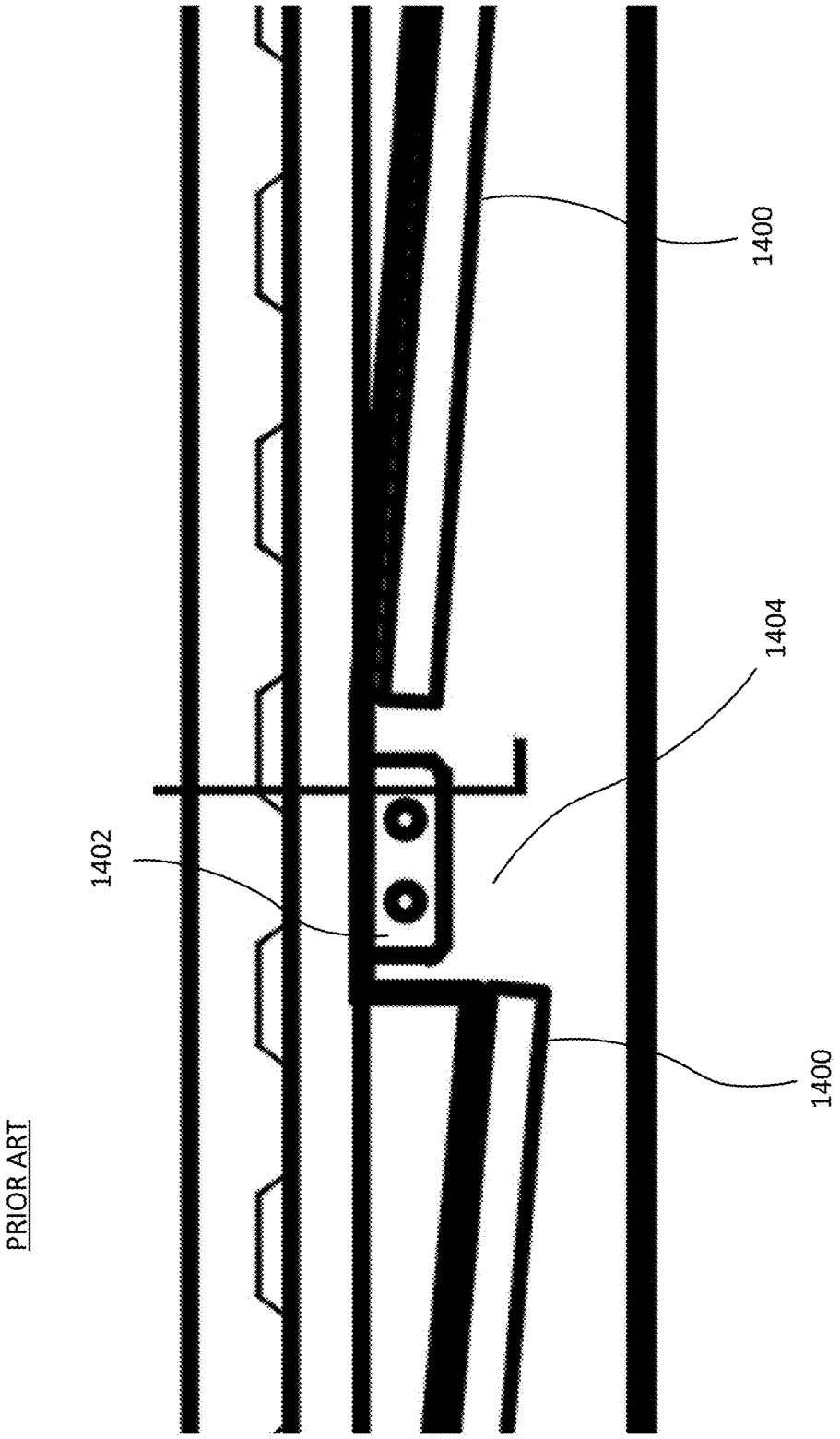

FIG. 14

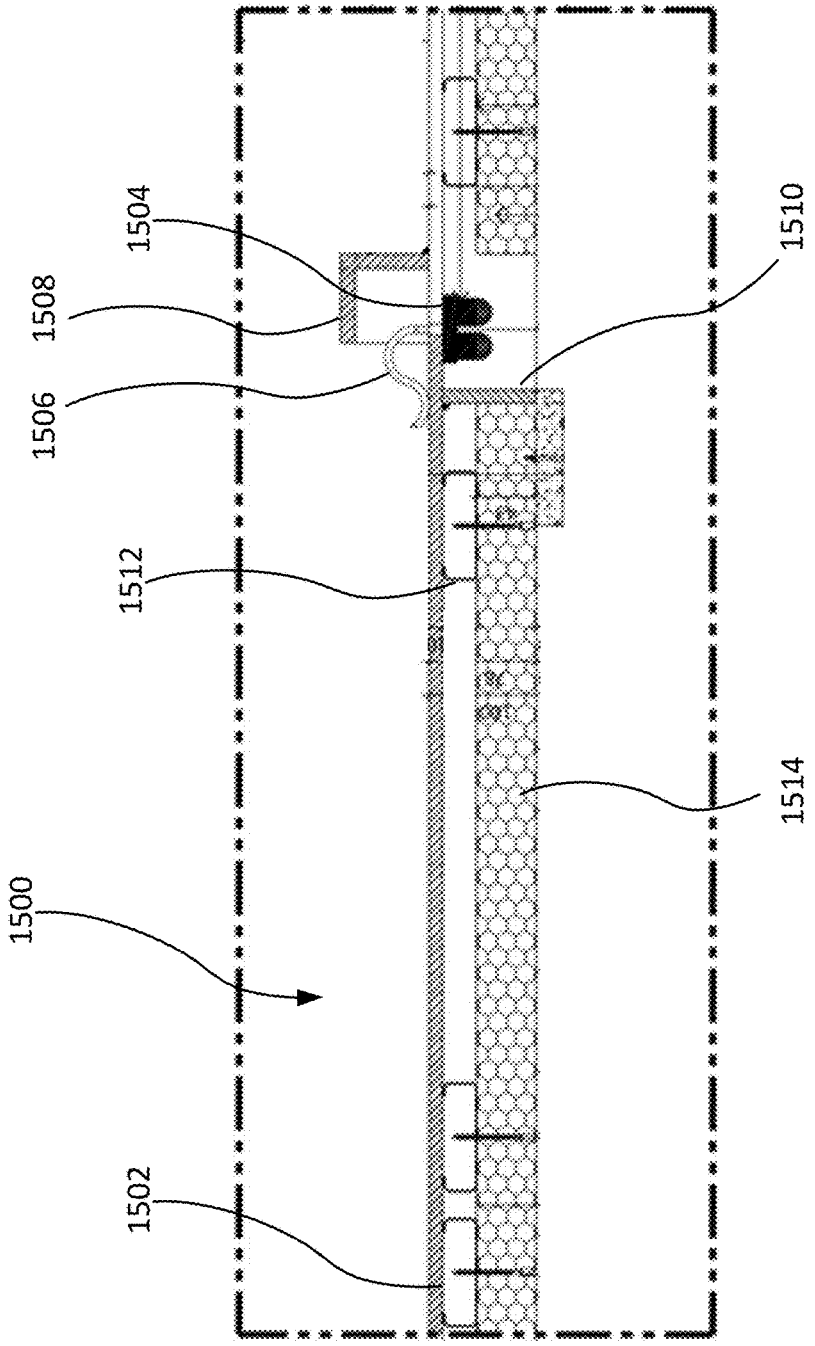

FIG. 15

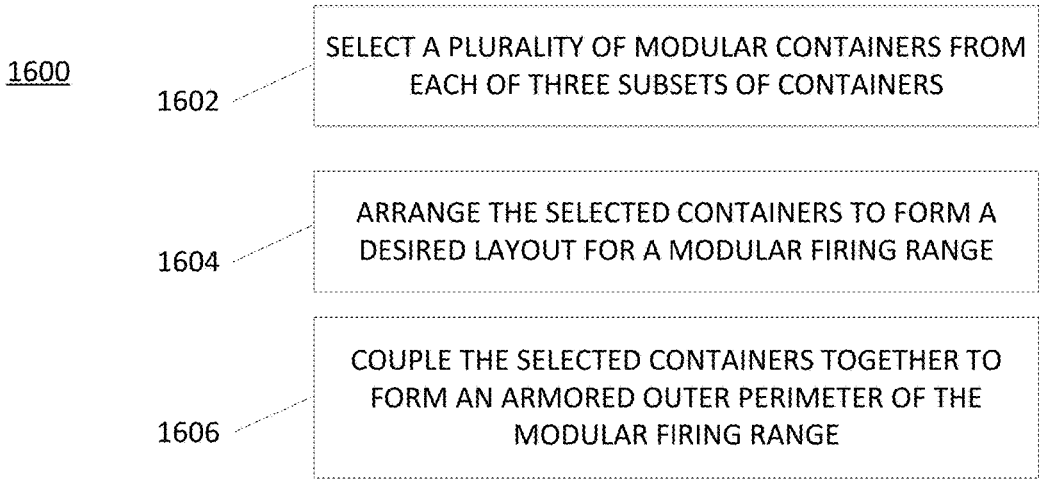
1600
1602
SELECT A PLURALITY OF MODULAR CONTAINERS FROM EACH OF THREE SUBSETS OF CONTAINERS
1604
ARRANGE THE SELECTED CONTAINERS TO FORM A DESIRED LAYOUT FOR A MODULAR FIRING RANGE
1606
COUPLE THE SELECTED CONTAINERS TOGETHER TO FORM AN ARMORED OUTER PERIMETER OF THE MODULAR FIRING RANGE

FIG. 16

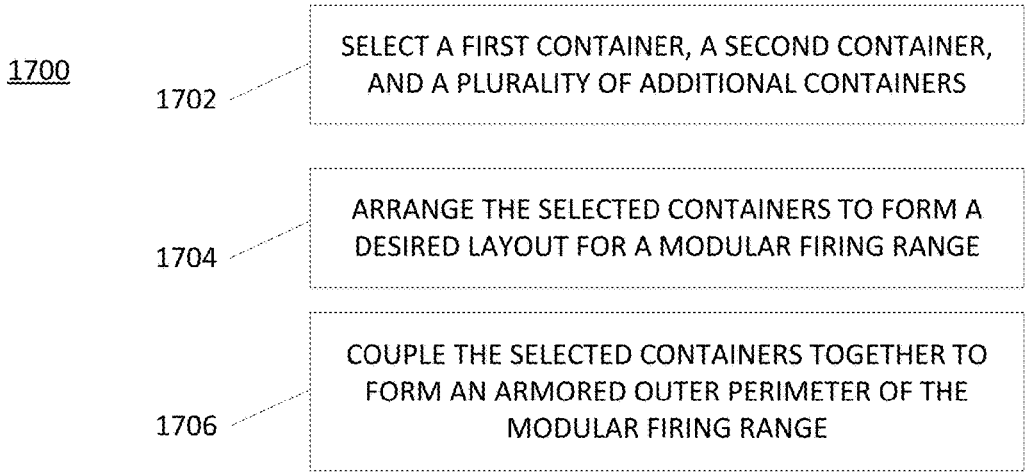
1700
1702
SELECT A FIRST CONTAINER, A SECOND CONTAINER, AND A PLURALITY OF ADDITIONAL CONTAINERS
1704
ARRANGE THE SELECTED CONTAINERS TO FORM A DESIRED LAYOUT FOR A MODULAR FIRING RANGE
1706
COUPLE THE SELECTED CONTAINERS TOGETHER TO FORM AN ARMORED OUTER PERIMETER OF THE MODULAR FIRING RANGE

FIG. 17

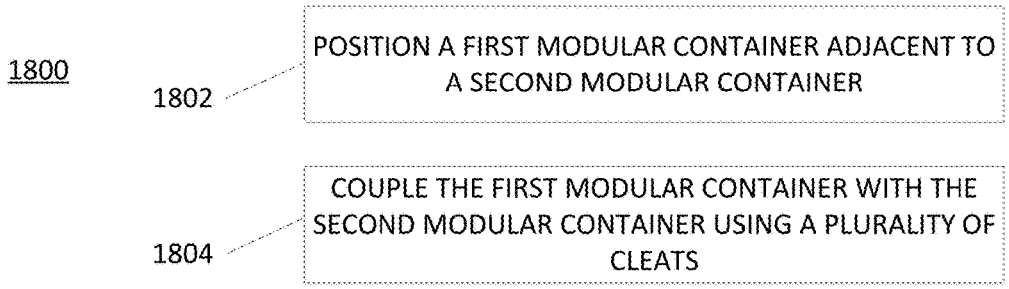
1800
1802
POSITION A FIRST MODULAR CONTAINER ADJACENT TO A SECOND MODULAR CONTAINER
1804
COUPLE THE FIRST MODULAR CONTAINER WITH THE SECOND MODULAR CONTAINER USING A PLURALITY OF CLEATS

FIG. 18

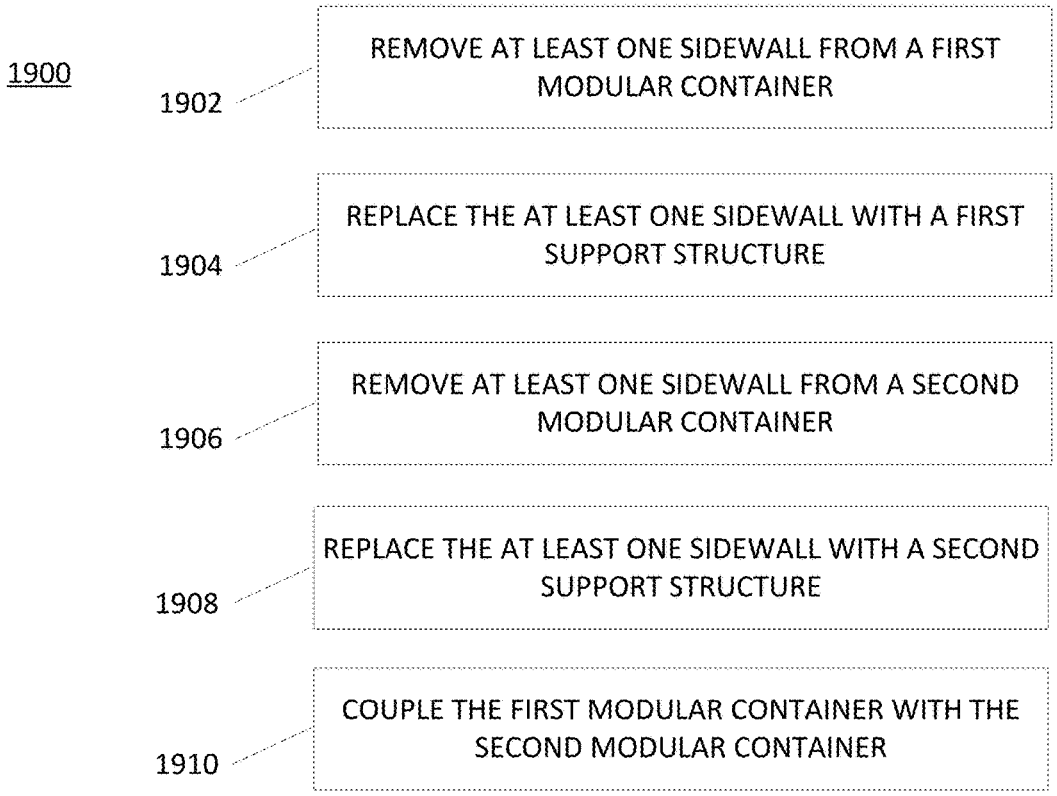
1900
1902
REMOVE AT LEAST ONE SIDEWALL FROM A FIRST MODULAR CONTAINER
1904
REPLACE THE AT LEAST ONE SIDEWALL WITH A FIRST SUPPORT STRUCTURE
1906
REMOVE AT LEAST ONE SIDEWALL FROM A SECOND MODULAR CONTAINER
1908
REPLACE THE AT LEAST ONE SIDEWALL WITH A SECOND SUPPORT STRUCTURE
1910
COUPLE THE FIRST MODULAR CONTAINER WITH THE SECOND MODULAR CONTAINER

FIG. 19

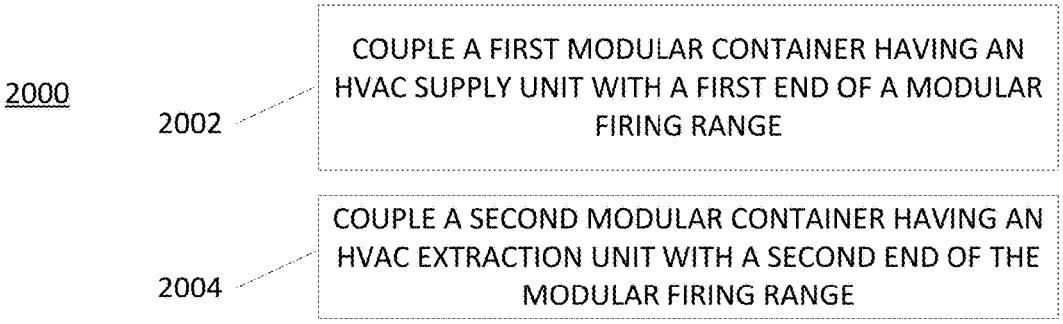
2000
2002
COUPLE A FIRST MODULAR CONTAINER HAVING AN HVAC SUPPLY UNIT WITH A FIRST END OF A MODULAR FIRING RANGE
2004
COUPLE A SECOND MODULAR CONTAINER HAVING AN HVAC EXTRACTION UNIT WITH A SECOND END OF THE MODULAR FIRING RANGE

FIG. 20

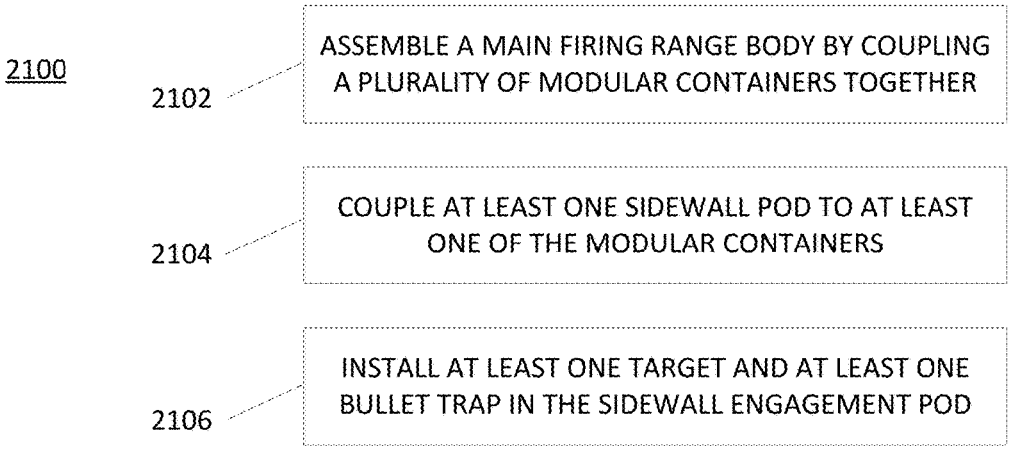
2100
2102
ASSEMBLE A MAIN FIRING RANGE BODY BY COUPLING A PLURALITY OF MODULAR CONTAINERS TOGETHER
2104
COUPLE AT LEAST ONE SIDEWALL POD TO AT LEAST ONE OF THE MODULAR CONTAINERS
2106
INSTALL AT LEAST ONE TARGET AND AT LEAST ONE BULLET TRAP IN THE SIDEWALL ENGAGEMENT POD

FIG. 21

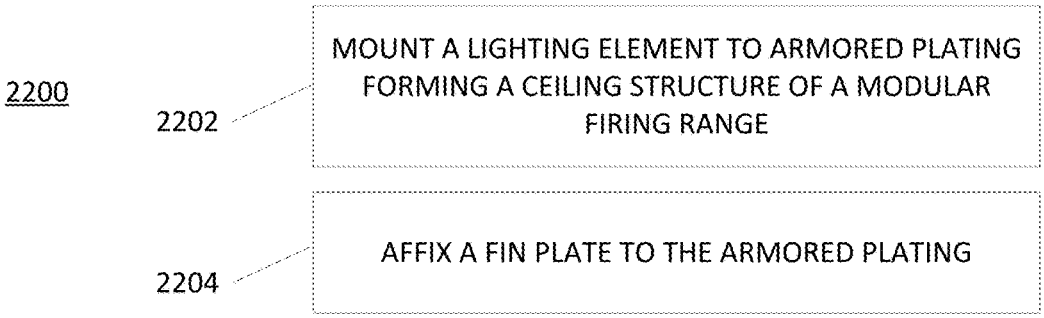
2200
2202
MOUNT A LIGHTING ELEMENT TO ARMORED PLATING FORMING A CEILING STRUCTURE OF A MODULAR FIRING RANGE
2204
AFFIX A FIN PLATE TO THE ARMORED PLATING

FIG. 22

MODULAR FIRING RANGE

CROSS-REFERENCES TO RELATED APPLICATIONS

[0001] This application is a divisional of U.S. patent application Ser. No. 16/171,948, entitled "MODULAR FIRING RANGE," filed Oct. 26, 2018, which claims the benefit of U.S. Provisional Application No. 62/577,638, entitled "MODULAR FIRING RANGE," filed on Oct. 26, 2017, and U.S. Provisional Application No. 62/682,686, entitled "MODULAR FIRING RANGE," filed on Jun. 8, 2018, the entire contents of which are hereby incorporated by reference.

BACKGROUND OF THE INVENTION

[0002] Traditional prefabricated firing ranges use containers as building blocks to creates a large firing range. Typically, these prefabricated shooting ranges are made from shipping containers that were manufactured to relatively low tolerances. However, individualization and customization often requires modifying each individual container accordingly, which results in increased construction time and costs. Additionally, joining two containers during the construction of a prefabricated firing range, therefore, could result in gaps at the join that could potentially lead to a gap in ballistic containment. To overcome this, previous prefabricated firing ranges would provide an overlapping baffle with the next container. This baffle, however, could create a pinch point reducing linewidth, create space for turbulent airflow, and/or fail to completely remove the gap in ballistic containment for misfired rounds.

[0003] Traditional prefabricated firing ranges were separated into separate lanes, where each container includes, for example, two adjacent firing lanes. Container walls were also retained to provide separation between firing lanes form separate containers. Thus, traditional prefabricated firing ranges had separation walls between each lane. However, the separation walls can be limiting, as they may limit visibility of the targets. Separation walls may also limit the capabilities of an instructor to supervise more than a handful of trainees, which can necessitate a small instructor-to-trainee ratio. Moreover, these separation walls can restrict firing exercises and training movements, and can increase cots due to the fact that they are typically fabricated from armored steel.

[0004] Traditional prefabricated firing ranges are also limited in capabilities due to roof-mounted HVAC plants. Roof-mounted HVAC plants are installed and commissioned on-site, increasing time and cost while decreasing quality. Because HVAC plants were located on the roof of the prefabricated firing ranges, waterproofing and other concerns are an issue, and any maintenance requires working at height, which increases the risk of injury during maintenance. Moreover, roof-mounted HVAC plants have to be decommissioned and removed to relocate the prefabricated firing range.

[0005] Traditional prefabricated firing ranges are further limited in their ability to allow trainees to engage tactically in any direction than toward a down-lane target at a far end of the firing range. Traditional prefabricated firing ranges often use baffles to protect lighting. This may be problematic, however, as such baffles create 1) a pinch point (reducing floor-to-ceiling height), 2) a gap in ballistic containment for misfired rounds, and 3) turbulent airflow.

BRIEF SUMMARY OF THE INVENTION

[0006] Embodiments of the present invention are directed to modular firing ranges that provide simple and customizable assembly, while ensuring that ballistic containment is maintained in all directions. Embodiments of the invention also provide weatherproof and simple to maintain HVAC connections for modular firing ranges. Embodiments also provide solutions to create modular firing ranges with open floor plans using standard ISO shipping containers.

[0007] According to one embodiment, a modular firing range is provided. The modular firing range may include a first subset of modular containers that is configured to form a first end of the modular firing range. The first subset may include outer walls that define the first end of the modular firing range and side walls that define a first portion of a side of the modular firing range. The modular firing range may include a second subset of modular containers that is configured to form a second end of the modular firing range. The second subset may include outer walls that define the second end of the modular firing range and side walls that define a second portion of the side of the modular firing range. The modular firing range may further include a third subset of modular containers that is coupleable between the first subset and the second subset to form a medial portion of the modular firing range. The third subset may include outer walls that define a third portion of the side of the modular firing range. The modular firing range may include an armored outer perimeter that provides complete ballistic containment in all directions.

[0008] In another embodiment, a modular firing range may include a first subset of modular containers that is configured to form a first end of the modular firing range. The first subset may include a first container having a front end wall and a left lateral sidewall and a second container having a front end wall and a right lateral sidewall. The modular firing range may also include a second subset of modular containers that is configured to form a second end of the modular firing range. the second subset may include a third container having a rear end wall and a left lateral sidewall and a fourth container having a rear end wall and a right lateral sidewall. The modular firing range may further include a third subset of modular containers that is coupleable between the first subset and the second subset to form a medial portion of the modular firing range. The third subset may include a fifth container having a left lateral sidewall and a sixth container having a right lateral sidewall. The modular firing range may include an armored outer perimeter that provides complete ballistic containment in all directions.

[0009] In one embodiment, a method of assembling a modular firing range is provided. The method may include selecting a plurality of modular containers from each of a first subset of modular containers, a second subset of modular containers, and a third subset of modular containers. The first subset may include outer walls that define the first end of the modular firing range and side walls that define a first portion of a side of the modular firing range. The second subset may include outer walls that define the second end of the modular firing range and side walls that define a second portion of the side of the modular firing range. The third subset may include modular containers that coupleable

between the first subset and the second subset to form a medial portion of the modular firing range. The third subset may also include outer walls that define a third portion of the side of the modular firing range. The method may also include arranging the selected plurality of modular containers to form a desired layout for the modular firing range and coupling the selected plurality of modular containers together to form an armored outer perimeter that provides complete ballistic containment in all directions.

[0010] In another embodiment, a modular firing range may include a first modular container that is configured to form a first end of the modular firing range. The first modular container may include two end walls and a first lateral sidewall. The modular firing range may also include a second modular container that is configured to form a second end of the modular firing range. The second modular container may include two end walls and a second lateral sidewall. The modular firing range may also include a plurality of additional modular containers that are coupleable between the first modular container and the second modular container to form a medial portion of the modular firing range. Each of the plurality of additional modular containers may include two end walls and no lateral sidewalls. The modular firing range may further include an armored outer perimeter that provides complete ballistic containment in all directions.

[0011] In another embodiment, a modular firing range may include a first modular container that is configured to form a first end of the modular firing range and a second modular container that is configured to form a second end of the modular firing range. Each of the first modular container and the second modular container may include two end walls and a lateral sidewall. The first modular container may be oriented in a first direction and the second modular container may be oriented in a second direction opposite the first direction such that open sides between the two end walls of each of the first modular container and the second modular container face one another. The modular firing range may also include a plurality of additional modular containers that are coupleable between the first modular container and the second modular container to form a medial portion of the modular firing range. Each of the plurality of additional modular containers may include two end walls and no lateral sidewalls. The modular firing range may further include an armored outer perimeter that provides complete ballistic containment in all directions.

[0012] In another embodiment, a method of assembling a modular firing range may include selecting a first modular container, a second modular container, and a plurality of additional modular containers. The first modular container may be configured to form a first end of the modular firing range and may include two end walls and a first lateral sidewall. The second modular container may be configured to form a second end of the modular firing range and may include two end walls and a second lateral sidewall. The plurality of additional modular containers may be coupleable between the first modular container and the second modular container to form a medial portion of the modular firing range. Each of the plurality of additional modular containers may include two end walls and no lateral sidewalls. The method may also include arranging the selected plurality of modular containers to form a desired layout for the modular firing range and coupling the selected plurality of modular containers together to form an armored outer perimeter that provides complete ballistic containment in all directions.

[0013] In another embodiment, a modular firing range may include a plurality of modular containers that define an open interior space that provides an area for a user to move about. Each of the plurality of modular containers may include an armored layer. Each of the plurality of modular containers may be coupled with at least one other of the plurality of modular containers along an edge of each respective one of the plurality of modular containers such that joints are formed between coupled edges of the plurality of modular containers. The edge of each respective one of the plurality of modular containers may include a plurality of cleats. The plurality of cleats between the coupled edges of two of the plurality of containers may be secured to one another to connect the two of the plurality of modular containers together. The modular firing range may further include an armored plate extending between and covering each joint such that a continuous armored boundary surrounds the interior space of the modular firing range.

[0014] In another embodiment, a connection system for a modular firing range is provided. The connection system may include a first modular container defining a first open interior that provides a user an area in which to move about. The first modular container may include a first edge that includes a first plurality of cleats spaced along a length of the first edge. The connection system may also include a second modular container defining a second open interior. The second modular container may include a second edge that includes a second plurality of cleats spaced along a length of the second edge. The first modular container and the second modular container may be positionable such that the each of the first plurality of cleats is in alignment and adjacent with a respective one of the second plurality of cleats such that each of the first plurality of cleats is coupleable with the respective one of the second plurality of cleats to secure the first modular container with the second modular container, thereby forming at least a portion of the modular firing range.

[0015] In another embodiment, a method of assembling a modular firing range may include positioning a first modular container adjacent to a second modular container such that open interiors defined by each of the first modular container and the second modular container may be joined to form at least a portion of the modular firing range and such that adjacent edges of the first modular container and the second modular container are in alignment with one another. The method may also include coupling each of a first plurality of cleats of the first modular container with a respective one of a second plurality of cleats of the second modular container to secure the first modular container and the second modular container together.

[0016] In another embodiment, a modular firing range having an open floor plan is provided. The modular firing range may include a modular container that has a bottom panel, a top panel, and a side panel that extends between a first edge of the top panel and a first edge of the bottom panel. A second edge of the top panel and a second edge of the bottom panel may at least partially define an opening to an interior space that provides a user an area in which to move about. The first modular container may include a support structure that includes a first column extending between a first corner of the second edge of the top panel and

a first corner of the second edge of the bottom panel, a second column extending between a second corner of the second edge of the top panel and a second corner of the second edge of the bottom panel, and a support beam extending across the second edge of the top panel and that is coupled with the first column and the second column.

[0017] In another embodiment, a modular firing range having an open floor plan may include a modular container having a bottom panel, a top panel, and at least one support structure that supports the top panel at a distance above the bottom panel along at least one edge of the modular container. The modular container may define an opening to an interior space that provides a user an area in which to move about. Each of the at least one support structure may include a first column extending between a first corner of a first edge of the top panel and a first corner of the first edge of the bottom panel, a second column extending between a second corner of the first edge of the top panel and a second corner of the first edge of the bottom panel, and a support beam extending across the first edge of the top panel and that is coupled with the first column and the second column.

[0018] In another embodiment, a method of creating modular firing range having an open floor plan is provided. The method may include removing at least one sidewall of a first modular container and replacing the at least one sidewall of the first modular container with a first support structure. The first support structure may include a first support beam coupled to a top edge of the first modular container and two or more columns supporting the first support beam. The method may also include removing at least one sidewall of a second modular container and replacing the at least one sidewall of the second modular container with a second support structure. The second support structure may include a second support beam coupled to a top edge of the second modular container and two or more columns supporting the second support beam. The method may further include coupling the first modular container with the second modular container such that the two or more columns supporting the first support beam are substantially aligned with the two or more columns supporting the second support beam.

[0019] In another embodiment, an HVAC system for a modular firing range is provided. The HVAC system may include a first modular container having an HVAC supply unit. The first modular container may be coupleable to a first wall of a modular firing range. The first modular container may define at least one air intake opening that is in fluid communication with the HVAC supply unit. The modular firing range may include at least one firing range modular container defining one or more firing lanes. The HVAC system may also include a second modular container having an HVAC extraction unit. The second modular container may be coupleable to a second wall of the modular firing range. The second modular container may define at least one air vent opening that is in fluid communication with the HVAC extraction unit.

[0020] In another embodiment, an HVAC system for a modular firing range may include a first modular container having an HVAC supply unit. The first modular container may define at least one air intake opening that is in fluid communication with the HVAC supply unit. The HVAC system may also include a second modular container having an HVAC extraction unit. The second modular container may define at least one air vent opening that is in fluid communication with the HVAC extraction unit. The HVAC system may further include a modular firing range coupleable between the first modular container and the second modular container. The modular firing range may include at least one firing range modular container defining one or more firing lanes.

[0021] In another embodiment, a method of connecting an HVAC system with a modular firing range is provided. The method may include coupling a first modular container comprising an HVAC supply unit with a first end of a modular firing range. The modular firing range may include at least one firing range modular container defining one or more firing lanes. The first modular container may define at least one air intake opening that is in fluid communication with the HVAC supply unit. The method may also include coupling a second modular container comprising an HVAC extraction unit with a second end of the modular firing range. The second modular container may define at least one air vent opening that is in fluid communication with the HVAC extraction unit.

[0022] In another embodiment, a modular firing range having a sidewall enhancement is provided. The modular firing range may include a main firing range body formed from a plurality of modular containers that may define a portion of an interior of the modular firing range. The interior of the modular firing range may define a plurality of firing lanes for live fire training exercises. The modular firing range may also include at least one sidewall pod formed from at least one additional modular container that is coupled with at least one of the plurality of modular containers adjacent the plurality of firing lanes and protruding outward in a lateral direction from the plurality of firing lanes. The at least sidewall pod may include one open side and walls on remaining sides such that the one open side is joined with the interior of the modular firing range.

[0023] In another embodiment, a modular firing range having a sidewall enhancement may include a main firing range body formed from a plurality of modular containers that may define a portion of an interior of the modular firing range. The interior of the modular firing range may define a plurality of firing lanes for live fire training exercises. The modular firing range may also include at least one sidewall pod formed from at least one additional modular container that may be coupled with at least one of the plurality of modular containers adjacent the plurality of firing lanes and protruding outward in a lateral direction from the plurality of firing lanes. The at least sidewall pod may include one open side and walls on remaining sides such that the one open side is joined with the interior of the modular firing range. The at least one sidewall pod may also include at least one target and at least one bullet trap to provide lateral live fire engagement training opportunities.

[0024] In another embodiment, a method of installing a modular sidewall enhancement onto a modular firing range is provided. The method may include assembling a main firing range body by coupling a plurality of modular containers to define a portion of an interior of the modular firing range. The interior of the modular firing range may define a plurality of firing lanes for live fire training exercises. The method may also include coupling at least one sidewall pod to at least one of the plurality of modular containers adjacent the plurality of firing lanes such that the at least one sidewall pod protrudes outward in a lateral direction from the plurality of firing lanes. The at least one sidewall pod may be

formed from at least one additional modular container. The at least sidewall pod may include one open side and walls on remaining sides such that the one open side may be joined with the interior of the modular firing range. The method may further include installing at least one target and at least one bullet trap in the at least one sidewall pod to provide lateral live fire engagement training opportunities.

[0025] In another embodiment, a light protection system for a modular firing range is provided. The light protection system may include a modular container having a ceiling structure comprising armored plating, a light element mounted to the ceiling structure such that a power cable of the light element extends through an aperture defined in the ceiling structure, a fin plate coupled with an extending downward from the armored plating and positioned at least on a side of the light element proximate a live fire shooting location of the modular firing range. The fin plate may be configured to protect the light element from ballistic projectiles.

[0026] In another embodiment, a light protection system for a modular firing range may include a modular container having a ceiling structure with armored plating and a light element mounted to the ceiling structure such that a power cable of the light element extends through an aperture defined in the ceiling structure. The light protection system may also include a fin plate coupled with an extending downward from the armored plating and positioned at least on a side of the light element proximate a live fire shooting location of the modular firing range. The fin plate may be configured to protect the light element from ballistic projectiles. The light protection system may further include an anti-ricochet material affixed to the armored plating.

[0027] In another embodiment, a method of assembling a light protection system for a modular firing range is provided. The method may include mounting a lighting element to armored plating forming a ceiling structure of a modular firing range such that the lighting element is positioned within an interior of the modular firing range with a power cable of the lighting element extending through an aperture defined by the armored plating. The method may also include affixing a fin plate to the armored plating such that the fin plate extends downward from the armored plating and is positioned at least on a side of the lighting element that is proximate a live fire shooting location of the modular firing range. The fin plate may be configured to protect the lighting element from ballistic projectiles.

BRIEF DESCRIPTION OF THE DRAWINGS

[0028] A further understanding of the nature and advantages of various embodiments may be realized by reference to the following figures. In the appended figures, similar components or features may have the same reference label. Further, various components of the same type may be distinguished by following the reference label by a dash and a second label that distinguishes among the similar components. If only the first reference label is used in the specification, the description is applicable to any one of the similar components having the same first reference label irrespective of the second reference label.

[0029] FIG. **1** illustrates a schematic of a modular firing range according to embodiments of the invention.

[0030] FIG. **2** illustrates an isometric view of a modular firing range according to embodiments of the invention.

[0031] FIG. **3** illustrates a schematic of a rotated modular firing range according to embodiments of the invention.

[0032] FIG. **4** illustrates an isometric view of a modular firing range according to embodiments of the invention.

[0033] FIG. **5** illustrates a schematic of a modular firing range having sidewall pods according to embodiments of the invention.

[0034] FIG. **6** illustrates a prior art HVAC system for use with a modular firing range.

[0035] FIG. **7** illustrates a schematic of a modular HVAC system for use with a modular firing range according to embodiments of the invention.

[0036] FIG. **8**A depicts an isometric view of a modular firing range according to embodiments of the invention.

[0037] FIG. **8**B depicts an top view of a modular firing range according to embodiments of the invention.

[0038] FIG. **9**A illustrates front view of a support structure that enables modular firing systems with open floor plans according to embodiments of the invention.

[0039] FIG. **9**B illustrates an isometric view of a support structure that enables modular firing systems with open floor plans according to embodiments of the invention.

[0040] FIG. **10** illustrates a modular firing range having an open floor plan according to embodiments of the invention.

[0041] FIG. **11** illustrates a prior art connection for a modular firing range.

[0042] FIG. **12** illustrates a cross-sectional view of a cleated connection for a modular firing range according to embodiments of the invention.

[0043] FIG. **13** illustrates an isometric view of a cleated connection for a modular firing range according to embodiments of the invention.

[0044] FIG. **13**A is a closer view of the cleated connection for a modular firing range of FIG. **13**.

[0045] FIG. **14** illustrates a prior art baffle and lighting system for modular firing ranges.

[0046] FIG. **15** illustrates a light protection system according to embodiments of the invention.

[0047] FIG. **16** is a flowchart depicting a process for assembling a modular firing range according to embodiments of the invention.

[0048] FIG. **17** is a flowchart depicting a process for assembling a modular firing range according embodiments of the invention.

[0049] FIG. **18** is a flowchart depicting a process for assembling a modular firing range according to embodiments of the invention.

[0050] FIG. **19** is a flowchart depicting a process for a creating modular firing range having an open floor plan according to embodiments of the invention.

[0051] FIG. **20** is a flowchart depicting a process for connecting an HVAC system with a modular firing range according to embodiments of the invention.

[0052] FIG. **21** is a flowchart depicting a process for installing a modular sidewall enhancement onto a modular firing range according to embodiments of the invention.

[0053] FIG. **22** is a flowchart depicting a process for assembling a light protection system for a modular firing range according to embodiments of the invention.

DETAILED DESCRIPTION OF THE INVENTION

[0054] The subject matter of embodiments of the present invention is described here with specificity to meet statutory

requirements, but this description is not necessarily intended to limit the scope of the claims. The claimed subject matter may be embodied in other ways, may include different elements or steps, and may be used in conjunction with other existing or future technologies. This description should not be interpreted as implying any particular order or arrangement among or between various steps or elements except when the order of individual steps or arrangement of elements is explicitly described.

[0055] Embodiments of the invention(s) described herein are generally related to a modular firing range. That said, a person of ordinary skill in the art will understand that alternative embodiments may vary from the embodiments discussed herein, and alternative applications may exist.

[0056] Prefabricated, modular firing ranges may be used by military, law enforcement, and/or other entities to quickly and easily create a safe, configurable, and cost-effective live-fire firing range for handguns, rifles, and/or other small arms. Such pre-fabricated firing ranges typically include one or more modular containers that are transportable by truck and quickly assembled on-site. These containers (e.g., ISO containers) could be joined to create a firing range with multiple firing lanes, and may be assembled and disassembled to enable the firing range to be effectively transported to any desirable site. For example, each of the containers may define an open interior space that provides space in which a user may move about. By joining the interior spaces of several containers, a scalable firing range may be designed and created.

[0057] Embodiments of the invention described herein provided additional features above and beyond traditional pre-fabricated firing ranges to add enhanced functionality. The description herein describes these embodiments, with reference to the attached figures.

[0058] Turning now to FIG. **1**, one embodiment of a modular firing range **100** in accordance with the present invention is illustrated. The modular firing range **100** is formed from a number of containers **102**, such as ISO shipping containers, that have been positioned adjacent and coupled to one another to create an environment that provides targeting and ballistic containment for live fire training exercises. In the illustrated embodiment, the containers **102** may fit into three basic standardized container types: A, B, and C, which may be used to form a firing range three containers **102** wide and three containers **102** long.

[0059] For example, the container type A may include end rooms that provide space for control rooms, plant rooms, and/or other areas, such as firing stations. This allows container type A to serve as initial entry rooms and/or areas in which a trainer may be to monitor the activity of trainees as they perform drills within the modular firing range **100**. This also allows container type A to serve as a starting point for mobile firing drills and/or a shooting stall for stationary firing drills. Accordingly, container type A may include one or more doors that are used to control access to the firing range **100**. Other containers **102** may include doors as well (or alternatively), but in some embodiments it may be advantageous to provide doors and/or other access points in container type A to prevent the possibility of someone entering the modular firing range **100** downstream of a live fire exercise that is underway.

[0060] Container type B may include open space that provides space/length for the modular shooting range **100**. For example, for stationary shooting drills in which the trainee remains stationary and shoots down range at one or more targets, any number of containers **102** of container type B may be inserted to increase the distance between the shooting stall and the target downrange of the stall to increase the length of the firing range **100**. Container type B may include any number of targets positioned along a length of each firing lane. In some embodiments, these targets may include popup, drop down, turning, and/or moving targets (such as paper human targets) that may be triggered to move into an engaged position in which the targets are visible to trainees. In mobile firing drills in which a trainee traverses a length off the firing range **100** and fires at targets when made visible, any number of containers **102** of container type B may be used to provide a proper sized training area. In some embodiments, each container **102** of container type B may define one or more firing lanes of the firing range **100** that each allow space for a trainee to use to perform drills.

[0061] Container type C may be configured to serve as the termination point for the modular firing range **100**. For example, the containers **102** of container type C may include bullet traps, targets, and/or other features that can be placed at the end of each firing lane of the firing range **100**. In such embodiments, one or more bullet traps may be positioned near a far end of the container **102** and may collect any rounds that have been fired toward the end of the container **102**.

[0062] While discussed with container type A being largely used for staging and monitoring, container type B providing firing lane distance and targets, and container type C providing targets and/or bullet traps, it will be appreciated that the functionality of each container type may be modified to suit the needs of a particular application. For example, various containers may be used for completely different functions and/or functions from one container type may be integrated into another container type and/or removed from one container type and put into another. Mobile firing ranges **100** constructed from the containers **102** may be fully customizable as long as care is taken to maintain a 360° ballistic containment profile around any area in which live fire exercises are performed. Moreover, various equipment, such as shooting stalls, staging areas (which may include desks and/or computers/monitors), cameras, targets, bullet traps, and the like may be preinstalled in the containers **102** prior to shipment and/or may be installed during and/or after assembly of the firing range **100**. The latter arrangement enables the firing range **100** to be more fully customizable to meet the needs of a particular training environment.

[0063] Each container type may have three different versions, such that containers **102** from nine standardized container types can be utilized to create a prefabricated firing range of any width or length. For example, container type A may include three different versions that have different exterior wall configurations. Container A**1** may include a front end wall **104** and a left lateral sidewall **106**. This allows container A**1** to be positioned at a front corner of the firing range **100**. Container A**3** may include a front end wall **104** and a right lateral sidewall **108**. This allows container A**3** to be positioned alongside and opposite container A**1** to create a closed end of a firing range **100**. In some embodiments, only a container A**1** and A**3** may be used, allowing a user to construct a firing range **100** that is only two containers **102** wide. In other embodiments, such as that illustrated in FIG. **1**, any number of containers A**2** may be inserted between a container A**1** and a container A**3** to

expand the width of the firing range **100**. Each container A**2** may include a front end wall **104**, but no lateral side walls **106** or **108**. As such, the addition of one or more containers A**2** may be used to increase the size of the firing range **100** without adding any interior partitioning walls.

[0064] Similarly, container type B may include three different versions with different exterior wall configurations. For example, container B**1** may include a left lateral wall **106**, but does not include any end walls. Container B**3** may include a right lateral wall **108**, but also does not include any end walls. This allows container B**3** to be positioned alongside and opposite container B**1** to create sides (and a main body) of a firing range **100**. In some embodiments, only a container B**1** and B**3** may be used, allowing a user to construct a firing range **100** that is only two containers **102** wide. In other embodiments, such as that illustrated in FIG. **1**, any number of containers B**2** may be inserted between a container B**1** and a container B**3** to expand the width of the firing range **100**. Each container B**2** may include no end walls and no lateral side walls. As such, the addition of one or more containers B**2** may be used to increase the size of the firing range **100** without adding any interior partitioning walls.

[0065] Container type C may include three different versions that have different exterior wall configurations. Container C**1** may include a rear end wall **110** and a left lateral sidewall **106**. This allows container C**1** to be positioned at a rear corner of the firing range **100**. Container C**3** may include a rear end wall **110** and a right lateral sidewall **108**. This allows container C**3** to be positioned alongside and opposite container C**1** to create a closed end of a firing range **100**. In some embodiments, only a container C**1** and C**3** may be used, allowing a user to construct a firing range **100** that is only two containers **102** wide. In other embodiments, such as that illustrated in FIG. **1**, any number of containers C**2** may be inserted between a container C**1** and a container C**3** to expand the width of the firing range **100**. Each container C**2** may include a rear end wall **110**, but no lateral side walls **106** or **108**. As such, the addition of one or more containers C**2** may be used to increase the size of the firing range **100** without adding any interior partitioning walls.

[0066] The use of such a modular container system creates a scalable modular firing range system that only requires nine different container designs to be fabricated, while allowing any number of configurations with any number of firing lanes available to satisfy the needs of a particular training operation and/or space constraints. Such systems make size adjustments a matter of adding and/or subtracting rows and/or columns of containers **102**. For example, reducing the width of the firing range is as simple removing a row of containers (e.g., A**2**-C**2**), while reducing the length of the firing range is a matter of removing a column of containers (e.g., B**1**-B**3**). On the other hand, additional rows (A**2**-C**2**) and/or columns (B**1**-B**3**) can be added to create a firing range having any width or length.

[0067] While discussed as having three main container categories, it will be appreciated that other container categories (or fewer) may be utilized to fit the needs of a particular application. The number of container categories may have an effect on the total number of variations of containers necessary to craft the various configurations of firing ranges, as adding to the number of primary container categories (A, B, C, etc.) may require larger numbers of container types to be produced. When selecting container configurations, any combination may be connected to provide a continuous outer wall that serves as a ballistic containment perimeter for the live firing exercises.

[0068] While not discussed as having any interior walls, firing range **100** may include interior walls in some embodiments. For example, dividing walls, partitions, stalls, and/or other obstructions may be positioned in the modular firing range **100**. These obstructions may extend along all or part of a single container **102** and/or multiple containers **102**. In some embodiments, the obstructions may extend fully from a floor to ceiling, while some obstructions extend partially upward from the floor. It will be appreciated that some of these obstructions may be formed from exterior walls of the containers **102**. For example, some or all containers **102** may have both right and left lateral sidewalls **106**, **108** such that some of the lateral sidewalls are positioned in an interior of the firing range **100** and serve to divide the firing range **100**. In other embodiments, the only lateral sidewalls of each container **102** are those described and illustrated with respect to FIG. **1**. Such embodiments enable firing ranges **100** having open floor plans to be constructed as discussed in relation to FIG. **9**A. The obstructions may be positioned interiorly of container sidewalls in some embodiments. These obstructions may be constructed as part of the containers **102** themselves and/or may be affixed to the interior the containers **102**/firing range **100** during assembly of the firing range **100**.

[0069] FIG. **2** demonstrates an isometric view of a portion of one firing range **100** arrangement constructed using containers **102**. For example, two containers **102** of each of container types A, B, and C are shown here to produce a firing range **100**. As shown here, the containers **102** of container type A include staging areas **112** and shooting stalls **114**. The containers **102** of container type B include firing lanes **116**, and the containers **102** of container type C include bullet traps **118** that are designed to receive and retain any ballistic shells that are fired toward a distal end of the firing range **100**.

[0070] Such containers can be used to create an entirely open range by rotating the containers 90 degrees, such as shown in FIG. **3**. Here, rotated containers **302** allow for the creation of an entirely unobstructed shooting for multiple parallel shooting lanes (up to 9, according to some embodiments, although other embodiments may have more or fewer shooting lanes).

[0071] Containers **302** may be modular, in a manner similar to the modular containers **102** illustrated in FIGS. **1** and **2** above. That is, two sets of one or two containers D**1** and D**3** may be used at each end and there may be a modular type of container D**2** used between these two sets of containers to comprise the firing lanes of the firing range, where any number of these modular containers D**2** may be used, based on desired length of the firing range **300**. Such a modular container may therefore be similar to the modular container B**2** shown in FIG. **1** above.

[0072] As shown, three versions of containers **302** may be utilized to construct a firing range **300** of any length when positioned side by side along the longitudinal side (with the longest sides of each container **302** being used to define the width of the firing range **300**), rather than the lateral side as done in firing range **100**. For example, a container D**1** may be utilized on a first end of the firing range **300** and may include a left lateral wall **306** (formed by an end of the container **302**), a front end wall **304** (formed by a side of the

container **302**), and a right lateral wall **308** (formed by a second end of the container **302**). At an opposite end, the firing range **300** may include a container D**3**, which may include a left lateral wall **306** (formed by an end of the container **302**), a rear end wall **310** (formed by a side of the container **302**), and a right lateral wall **308** (formed by a second end of the container **302**). Containers D**1** and D**3** may be positioned on opposite ends of the firing range **300** to provide ballistic containment on either end of the firing range **300**. To increase the length of the firing range **300**, any number of containers D**2** may be positioned between containers D**1** and D**3**. Containers D**2** may include a left lateral wall **306** (formed by an end of the container **302**) a right lateral wall **308** (formed by a second end of the container **302**), but do not include any end walls. Using a three container arrangement as illustrated here allows for any length of firing range **300** to be constructed using three container types, while providing a significantly wide firing range **300** by taking advantage of the longitudinal side by side arrangement of the containers **302**.

[0073] It will be appreciated that in some embodiments, only two container types may be necessary, as container type D**1** may be rotated 180° to form a container of type D**3**. This is possible in embodiments where HVAC fittings for supply and extraction lines are uniform. Additional concerns with a two container embodiment are the presence of doors and/or other access points at two ends of the firing range **300**. For example, if three containers **302** are used, only D**1** may include access points, which may prevent users from entering the firing range **300** downstream of an active live fire exercise. If only two container types are utilized, then both ends of the firing range **300** may include access points. In such instances, special care may need to be taken to ensure that the access points downstream of any active exercises are securely locked to prevent accidental entry.

[0074] FIG. **4** demonstrates one embodiment of just one arrangement of a firing range **400** formed using three container types such as described in relation to FIG. **3**. For example, firing range **400** includes a container **402** of type D**1** that defines an entryway **404** to a number of shooting stalls **406** and firing lanes **408** defined by containers **402** of type D**2**. Bullet traps **410** are positioned at a far end of the firing range **400** in a container **402** of type D**2** and a container **402** of type D**3** (although in some embodiments only a container **402** of type D**3** may include bullet traps **410**). In the illustrated embodiment, additional containers **402** are used for additional purposes and may not be necessary in all applications. For example, an HVAC supply container **412** and an HVAC extraction container **414** are provided at either end of the firing range **400** to provide temperature regulation and to control airflow within the firing range **400** as discussed in greater detail below. A control room container **416** is provided near the container **402** of type D**1**, and a number of storage containers **418** are provided along a side of the firing range **400**. While shown here with some of the additional containers being of different container types, it will be appreciated that any of these additional containers may be omitted and/or designed to match an exciting container type (such as type D**1** and/or D**3**) to meet the needs of the particular training application and space requirements while still minimizing the number of different container types that need to be constructed to enable the production of modular firing ranges. It will be further appreciated that the above embodiment is only illustrative in nature and any number of permutations of containers of types D**1**, D**2**, and/or D**3** may be connected to one another to form firing ranges having desired characteristics.

[0075] Embodiments of the invention may optionally include sidewall "pods" that provide an additional space, adjacent to a firing lane, to allow additional engagement by a trainee in a lateral direction relative to the firing range. For example, as shown in FIG. **5**, one embodiment of a firing range **500** that includes sidewall pods **504** is shown. Here, firing range **500** is formed in a manner similar to that described in relation to FIG. **1**. For example, containers **502** similar to types A, B, and C are coupled end to end (rather than side by side as done in FIG. **3**) to form a firing range **500** having an entry/staging area **506**, range area **508**, and bullet trap area **510**. Firing range **500** also includes an HVAC supply container **512** and HVAC extraction container **514** similar to those described in greater detail below. In the present embodiment, the sidewall pods **504** are positioned alongside the range area **508** and project outward from the rest of the outer perimeter of the firing range **500**. The sidewall pods **504** in the present embodiment have a wall structure similar to that of container type D**3** described above, and utilize two end walls **516** and one lateral side wall **518** to expand the interior of the firing range **500** while maintaining ballistic containment in 360°. While shown here as full containers of the D**3** wall configuration, it will be appreciated that other sidewall pod **504** designs, including partial containers, containers in other orientations, and/or multiple containers having the same or different wall structures may be used to construct each sidewall pod **504**. For example, a sidewall pod **504** may be formed from several containers **502**, such as a sidewall pod **504** formed from a container of type A**1** or C**1**, a container of type A**3** or C**3**, and/or any number (including zero) containers of type B**1** or B**3**, to form an elongate sidewall pod **504**. Any combination of containers, sizes, shapes, and/or orientations of containers **502** may be utilized to construct a sidewall pod **504** of a desired size and shape as long as ballistic containment in all directions is maintained.

[0076] The sidewall pods **504** may provide additional space for equipment storage/placement within firing range **500**. In some embodiments, the equipment may include targets and/or bullet traps. In such embodiments, the sidewall pods **504** provide the ability for training engagement not only down-lane of each firing lane, but also provide lateral engagement techniques that allow trainees to practice firing at lateral targets as well as down-lane targets. This can provide close quarter engagement practice in combination or in alternative to the long distance engagement normally provided by the more elongate firing lanes, as arrangements such as the one illustrated provide target positions that must be relatively close to the trainee. Such arrangements allow for targets to be provided both downstream or laterally relative to a trainee (either simultaneously, or selectively based on the needs of a particular training drill) such that training exercises may involve distance training, proximity training, or both and training exercises may be conducted that involve trainees being forced to switch between distance training and proximity training to locate and engage with the relevant target, which may show up in any direction downstream and/or with respect to the trainee's position within the firing range **500**.

[0077] As hinted at above, oftentimes modular firing ranges include HVAC systems that provide air circulation, as well as temperature control (heat, air conditioning, humidity control, etc.) to the modular firing ranges. Conventionally, such HVAC systems were mounted to the roof of the modular firing ranges as shown in FIG. **6**. For example, an HVAC supply system **602** was mounted at a proximal end of roof of a firing range **600**, while an HVAC extraction system **604** was mounted atop a distal end of the firing range **600**. Such placement led to several problems, as the height of the HVAC systems required maintenance personnel to climb atop the firing range **600** and service the HVAC systems from an elevated height, which could lead to unsafe working conditions due to the risk of falling. Additionally, roof-mounted HVAC systems such as shown in FIG. **6** require HVAC connections to be made through the roof of the firing range **600**. Such connections, while typically sealed, may still run into water leakage problems, especially as gaskets fail, due to the orientation of the connections. Specifically, the connections require upward facing openings to be made in the roof of the containers making up the firing range **600**, which may be particularly susceptible to the ingress of standing and/or falling water. These roof-mounted systems also must be decommissioned and removed for storage, and required greater container roof strengths given the weight of the systems and the need to additionally support maintenance personnel who must service the HVAC system.

[0078] To provide a simpler, safer maintenance process, as well as to reduce the issue of weatherproofing, embodiments of the modular firing ranges described herein may include HVAC supply and extraction units that are located on the side of the modular containers of the firing range, rather than on the roof. Not only does this alleviate waterproofing and maintenance issues that arise for roof-mounted HVAC systems, but such designs also allow an HVAC plant to be factory installed and commissioned within containers, which are then attached to the modular containers of the prefabricated firing range. Accordingly, these HVAC containers can have modularity similar to the modularity of the containers of the prefabricated firing range. Additionally, such solutions may reduce construction/installation costs and may isolate sound breakout from the HVAC plant, as the HVAC systems themselves are housed within modular containers instead of being mounted to an exterior of the modular firing range. As illustrated in FIG. **7**, a modular firing range **700** is constructed having a main firing range body **702** that provides 360° of ballistic containment and which may be constructed according to any design and structure principles disclosed herein. For example, the firing range body **702** may be constructed in a manner similar to that described in relation to FIG. **1** in which containers selected from container types A, B, and/or C are coupled together to form a modular firing range having a staging area, firing range/lane area, and/or target/bullet trap area. In other embodiments, the firing range body **702** may be constructed from containers of container types D**1**-D**3**. In some embodiments, firing range body **702** may include modular sidewall pods and/or storage containers.

[0079] As illustrated, firing range body **702** is coupled to an HVAC supply container **704** at a proximal side of the firing range body **702**. HVAC supply container **704** is coupled with the firing range body **702** using one or more supply ducts **706**. These ducts **706** may be installed at the factory and/or may be installed on-site in the field, such as by inserting the ductwork through openings defined in the containers that make up the firing range body **702** and the HVAC supply container **704**. These openings and/or the ducts **706** may be sealed, such as using gaskets, to prevent the ingress of water or debris into the HVAC system that could otherwise be passed into the firing range body **702**. Oftentimes, the ducts **706** may be coupled with one another and/or the HVAC container **704** and/or the firing range body **702** using fasteners, clamps, an/or other securement mechanisms. For example, fasteners may be inserted through a flanged connection and tightened to couple the various duct components together to create a fluid pathway for air from the HVAC supply system.

[0080] HVAC supply container **704** includes any number of HVAC units **708**, such as heating units, air conditioning units, humidifiers, dehumidifiers, filtration units, and the like. Air may be drawn into the HVAC units **708** via one or more fluid ports **710** defined in an exterior of the HVAC supply container **704**. The number and type of HVAC units **708** may be determined based on the needs of a particular training application, as well as the location, current weather/climate and the like. For example, in the summer, the HVAC units **708** may include air conditioning units to counteract the heat, while in the winter, HVAC units **708** may include heating units. In some embodiments, HVAC units **708** may be selected to simulate a particular set of training conditions. For example, if a set of trainees is training to a mission in a warm, humid climate, the HVAC units **708** may include heating units and humidifiers that can increase the temperature and humidity levels within the firing range. Similarly, if the mission is in a cold dry climate, the HVAC units **708** may include air conditioning (and/or refrigeration) units and/or dehumidifiers to simulate mission conditions.

[0081] Oftentimes, the HVAC units **708** may be installed into the HVAC supply container **704** at the factory, requiring only the HVAC supply container **704** be hooked up to the firing range body **702** using the ducts **706** during installation. In such embodiments, each HVAC supply container **704** may be manufactured with the same HVAC units **708** and/or each HVAC supply container **704** may be specially ordered with a particular set of HVAC units **708** to meet the needs of particular application. As just one example, in embodiments where all HVAC supply containers **704** include the same preselected set of HVAC units **708**, one or more of each type of available HVAC units **708** may be included.

[0082] Also coupled with the firing range body **702** is an HVAC extraction container **712** at a distal side of the firing range body **702**. HVAC extraction container **712** is configured to provide a ventilation system to the firing range **700** to allow for fresh air to be pumped throughout the firing range body **702**. In some embodiments, one or more fans (not shown) may be used to draw air out from the firing range body **702**, which may be expelled through one or more ventilation ports **716** defined by an exterior of the HVAC extraction container **712**. HVAC extraction container **712** is coupled with the firing range body **702** using one or more venting ducts **714**. These ducts **714** may be installed at the factory and/or may be installed on-site in the field, such as by inserting the ductwork through openings defined in the containers that make up the firing range body **702** and the HVAC extraction container **712**. These openings and/or the ducts **714** may be sealed, such as using gaskets, to prevent the ingress of water or debris into the HVAC system that could otherwise be passed into the firing range body **702**.

Oftentimes, the ducts **714** may be coupled with one another and/or the HVAC extraction container **712** and/or the firing range body **702** using fasteners, clamps, an/or other securement mechanisms. For example, fasteners may be inserted through a flanged connection and tightened to couple the various duct components together to create a fluid pathway for air from the HVAC extraction system.

[0083] While shown here with one HVAC supply container **704** and one HVAC extraction container **712**, it will be appreciated that any number of supply and/or extraction containers may be utilized in a particular application. Moreover, the size of each container may be adjusted to meet the demands of the application. For example, larger firing ranges **700** may utilize larger HVAC containers such that a greater number of HVAC units **708** and/or connections may be provided to increase airflow effects. In other embodiments, smaller, specialized HVAC containers may be utilized to achieve desired climate effects. For example, a training organization may keep on hand a variety of different HVAC containers for different purposes, such as a refrigeration container that includes units to cool the temperature of a firing range, while a humidity and/or heating container may be hooked up to a firing range to simulate a hot, humid environment. It will be appreciated that any number of combinations of sizes, numbers, and/or types of HVAC containers may be utilized.

[0084] Additionally, while shown with the HVAC containers positioned with their sides by an end of the firing range body **702** to minimize the footprint of the firing range **700** and to provide more area for ductwork connections, in some embodiments the HVAC containers may be positioned end to end with the firing range body **702**. The placement of the HVAC containers may also vary. Furthermore, in some embodiments, the HVAC containers may be stacked atop the containers that make up the modular firing range. In such embodiments, the ductwork is still configured to connect the HVAC containers to the modular firing range containers on horizontally facing surfaces to aid in weatherproofing.

[0085] While placing the ductwork at opposite ends of the firing range body **702** may be useful to minimize irregular airflow or cross-lane airflow, it will be appreciated that the HVAC containers and/or the ductwork connections may be attached with the firing range body **702** at different locations that are not at the ends of the firing range body **702**. In some embodiments, ductwork may be elongated and/or bent to allow for placement of the HVAC containers to be along the lateral sides of the firing range body **702** while still connecting the airflow ducts at the ends of the container bodies. While not shown, the containers making up the firing range body **702** may also include interior ductwork that may allow air to and from the HVAC system to be directed to desired locations and in desired directions within the firing range body **702**, which may be used to control airflow conditions during firing exercises and/or may allow lateral (rather than end) duct connections of the HVAC systems to have end to end airflow within the firing range body.

[0086] FIGS. **8**A and **8**B illustrate one arrangement of a modular firing range **800** designed in accordance with the present invention. Firing range **800** includes a firing range body **802** that includes an arrangement of modular containers (either from A**1**-C**3** or from D**1**-D**3**) that include a staging/control/supervision area **804**, a firing range area **806** having a number of firing lanes **808** and a number of targets **810** arranged within the firing range area **806**. A number of bullet traps **812** may be provided at a distal end of the firing range body **802**. Here, an HVAC supply container **814** is positioned at a proximate end of the firing range body **802** and an HVAC extraction container **816** is positioned at a distal end of the firing range body **802**. It will be appreciated that other arrangements of firing range **800** are possible, and that more or less modular containers may be used to create the firing range **800**. In addition, different containers, such as sidewall pods may be included to further enhance/customize the firing range **800** for a particular application.

[0087] Conventional modular firing ranges that are constructed from ISO shipping containers include separation walls between each container that are formed from the outer (side and/or end) walls of the container itself. In some embodiments, such as those illustrated in the drawings herein, the modular containers of the modular firing plan are modified to accommodate an open floor plan. To do this, some or all of the separation walls may be removed and replaced with a support structure that ties into the existing containers and provides structural strength and stability once one or more sidewalls are removed. The open floor plan allows trainees to move laterally within the firing range, and also provides a greater field of vision for instructors, which leads to increased safety. Additionally, the removal of sidewalls may reduce the quantity of armored steel needed to produce a safe firing range, as there are no separation walls that need to be reinforced.

[0088] A support structure **900** that is used to support the roof **902** of a container **904** when a separation wall is removed is illustrated in FIGS. **9**A and **9**B. Support structure **900** includes a first column **906** that is positioned at (or near) a first corner of the container **904** and extends between a top panel (roof/ceiling) of the container **904** and a bottom panel (floor structure) of the container **904**. A second column **908** is positioned at (or near) a second corner of the container **904** that is opposite the first along a same edge of the container **904**. The second column **908** also extends between a top panel (roof/ceiling) of the container **904** and a bottom panel (floor structure) of the container **904**. Each of columns **906** and **908** are typically made of steel and/or other metal alloys and are between about 100 mm and 300 mm in width, oftentimes about 250 mm, although other widths may be utilized. The width and/or thickness of the metal columns **906** and **908** may be selected based on the weights and/or dimensions of the container **904** and/or the weights and/or dimensions of the separation wall being removed. For example, if the separation wall being replaced by support structure **900** is an end wall, the dimensions may be smaller and smaller columns **906** and **908** may be utilized. Similarly, if the separation wall being removed is an elongate sidewall of a large container **904**, the columns **906** and **908** may be scaled up in size to accommodate the additional mass that was previously supported by the separation wall.

[0089] Columns **906** and **908** are configured to support a beam **910** that extends across the top edge of the container **904**. In some embodiments, a single beam **910** may extend entirely (or substantially) across the top edge such that it fully spans the distance between the first column **906** and the second column **908**. This is particularly common for the replacement of shorter separation walls, such as end walls, or side walls of smaller containers **904**. In embodiments in which the separation wall being replaced is longer, such as for sidewalls of larger containers **904**, two or more beams **910** may be used to span the distance between the first

column **906** and the second column **908**. In such cases, the beams **910** may often be spliced together, such as using end plated, bolted cover plate, fully welded one sided cover plate, and/or fully but welded techniques.

[0090] Beam **910** may be coupled to the columns **906** and **908** in any number of manners. For example, as shown in FIG. **9**A, an end of beam **910** is rested atop and secured to each of the columns **906** and **908**. The ends of beam **910** may be secured to the tops of columns **906** and **908** using bolted and/or welded connections. In some embodiments, these connections may be reinforced using angle cleats and/or other reinforcement mechanisms. In other embodiments, the beam **910** may be secured between the columns **906** and **908**, rather than atop the columns **906** and **908**. For example, seat-angle connections, web standard beam connections, combined web seat angle connections, end plate connections, and/or other beam connections may be used to secure the beam **910** with the columns **906** and **908**.

[0091] In some embodiments, one or more additional columns **912** may be included in support structure **900**. Column(s) **912** may be positioned at medial positions at regular intervals along a length of the open side of the container **904**. As shown here, a single column **912** is positioned directly in between the columns **906** and **906** and supports a medial portion of the beam **910**. Usage of medial columns **912** may be particularly useful for longer containers **904** and/or for containers that have particularly heavy roof structures, as the column(s) **912** provide additional support for the beam **910** and roof of the container **904**. Oftentimes, column(s) **912** may be thinner than columns **906** and **908** and often have widths of between about 80 mm and 150 mm, although other widths may be used to meet the structural needs of a particular application. It will be appreciated that it may be desirable to eliminate the use of medial columns **912** to open up the floor plan of the firing ranges as much as possible. In such embodiments, the width, thicknesses, and/or materials of columns **906** and **908** and/or beam **910** may be selected to create a stronger support structure **900** so as to render medial column(s) **912** unnecessary.

[0092] Beam **910** and columns **906**, **908**, and **912** may be any cross sectional shape. For example, beam **910** and columns **906**, **908**, and/or **912** may have I-shaped cross sections, rectangular shaped cross sections, circular cross sections, and/or cross sections of other shapes. In some embodiments, beam **910** and columns **906**, **908**, and/or **912** may include stiffeners and/or other features that increase the strength and rigidity of the particular structure, enabling the support structure **900** to support greater loads. In rectangular beam/column embodiments, it will be appreciate that the height and base dimensions of the cross-sections may be the same (square-shaped) or different. For example, the base and width dimensions for a particular column may be approximately 100 mm×300 mm, although numerous other dimensions are possible based on the needs of the particular application.

[0093] It will be appreciated that any number of separation walls of a container **904** may be replaced using support structure **900**. For example, a container A**1**, A**3**, C**1**, C**3**, and/or D**2** may have two separation walls (one end and one sidewall for A**1**, A**3**, C**1**, and C**3** and two sidewalls for D**2**) removed and replaced with support structures **900**. A container D**1** or D**3** may have a single sidewall removed and replaced with support structure **900**. A container A**2**, B**1**, B**3**, and/or C**2** may have three separation walls (both end walls and one sidewall for B**1** and B**3** and both sidewalls and one end wall for A**2** and C**2**) removed and replaced with support structures **900**. Container B**2** may have all four walls removed and replaced with support structures **900**. Still other combinations of separation wall removal and support structure usage may be contemplated in accordance with the present invention to create any desired design of modular firing range with an open floor plan.

[0094] Moreover, in some embodiments, a portion of a single separation wall may be removed and replaced with a support structure **900**. For example, half of a sidewall of a container **904** may be removed and replaced with a support structure **900**. In such a case, the columns **906** and **908** may be positioned based on the outer bounds of the opening provided by the removal of the portion of the sidewall and one or both of column **906** or **908** may not be positioned in a corner of a container **904**. For example, if the half of the removed sidewall portion includes a corner of the sidewall, then one of the columns **906** and **908** will be positioned at or near the corner while the other will be positioned at an opposing end of the opening and will not be at or near a corner of the container **904**. If the portion of the removed sidewall is from a medial portion (such as the center) of the sidewall, then both columns **906** and **908** will be spaced apart from the corners of the container **904**. Such removal of a portion of a separation wall may be particularly useful, for example, in embodiments where a smaller container is used as a sidewall pod that is positioned adjacent a container **904** that has an outer wall formed from a sidewall of a full size container. In such embodiments, only a portion of the sidewall of container **904** is removed to match the shorter dimension of the small container used for the sidewall pod.

[0095] The firing ranges described herein, while often fashioned from ISO shipping containers, may have a more finished interior than standard ISO shipping containers. For example, an armor layer, such as armor plating, may be applied to an interior surface of each shipping container. The armor plating may be applied to any side/end walls, the ceiling, the columns/beams of the support structure, and/or the floor. This armor plating may be formed from AR500 steel and/or other ballistic grade shielding that can serve to constrain ballistic projectiles within the confines of the firing range. Oftentimes, this shielding may be between approximately 5 mm and 15 mm thick, with thicknesses of approximately 10 mm being common, although other thicknesses may be used to meet the needs of a particular application. Additionally, a coating or layer of anti-ricochet material, such as a rubber and/or polyboard material may be applied to the armor plating. This provides several benefits. For example, the anti-ricochet material may prevent ballistic shells from ricocheting off interior surfaces of the firing range where the ricochets could make the shells dangerous to the trainees within the firing range. Additionally, the anti-ricochet material may provide sound insulation that will dampen the sounds produced by the firearms or voices within the firing range, and may also prevent or reduce the effect of echoes and other distracting sounds. Furthermore, such coating may provide the interior of the firing ranges with a more finished appearance that provides a more welcoming training environment than plain shipping containers, which may give off a warehouse aesthetic. Such a finished approach is illustrated in FIG. **10**, which demonstrates a firing range **1000** having an open floor plan in

which the walls **1002**, floors **1004**, ceilings **1006**, and/or support columns **1008** are wrapped in armor plating, which is then surrounded by a rubber anti-ricochet layer.

[0096] As discussed above, the modular containers described herein may be constructed using standard ISO shipping containers, which may be manufactured to low tolerances. For example, 40 foot ISO containers are designed to the dimensions and tolerances shown in Table 1.

TABLE 1

40 Foot ISO Shipping Container Dimensions

Classification		Dimension (mm)	Tolerance (mm) Lower (−)	Tolerance (mm) Upper (+)
External	Length	12192	10	0
	Width	2438	5	0
	Height	2896	5	0
Internal	Length	12032	10	0
	Width	2352	5	0
	Height	2698	5	0
Door Opening	Width	2340	5	0
	Height	2585	5	0

[0097] Even these small size differences lead to gaps in the ballistic containment when containers of slightly different sizes are complexed together to form a modular firing range. Moreover, such gaps can create areas of turbulent airflow that may affect the trajectories of ballistic projectiles firing in the firing range. Prior art solutions involved the use of steel baffles **1102** that overlap an adjacent container **1100** as shown in FIG. **11**. These baffles **1102** would be mounted to an interior of the roof structure **1104** of the containers **1100** and be gradually angled and/or bent slightly downward so that each baffle **1102** may extend beyond the start of the baffle **1102** on an adjacent container **1100**. However, using baffles **1102** in this manner creates pinch points (at the downward angled/bent portion) that reduce the interior space (lane width and/or lane height), while also leaving a gap **1106** in ballistic containment between the baffles **1102**, which not only provide a path through which misfired live rounds can escape the firing range and may create a space for turbulent air flow.

[0098] To provide gapless connections between modular containers to eliminate pinch points and maximizing linewidths, as well as to prevent turbulent flows, embodiments may utilize a cleated connection to couple containers together and to provide full ballistic containment as shown in FIG. **12**. For example, FIG. **12** illustrates a cross-section of edges **1202** of two adjacent containers **1200** that are coupled together using a cleated connection. As shown here, each container **1200** includes an outer surface **1204**, an armored plating **1206** on an interior of the container **1200**, and spacers **1208** (such as rods or channels like hat channels or lipped channels) that separate the armored plating **1206** from a rubber and/or other anti-ricochet layer **1210**. However, in embodiments in which the sidewalls may be expected to face more direct shooting, such as sidewall pod embodiments, the anti-ricochet layer **1210** may be affixed directly to the armored plating **1206**, such as by using an adhesive to bond the layers together. Armored plating **1206** may be permanently affixed to the walls of container **1200**, such as by welding and/or other permanent securement techniques. It will be appreciated that the structure of container **1200** is merely one example of the structural and finishing layers of a container **1200** and that other arrangements of container structures may be contemplated in accordance with the present invention. To seal the gap between armored plating **1206** of the two containers **1200**, a separate armored plate **1212** is mounted onto the armored plating **1206** of both of the containers **1200** such that the armored plate **1212** spans and covers the entire gap, thereby providing full ballistic containment between the containers **1200**. To secure the armored plate **1212** to the armored plating **1206**, removable coupling mechanisms may be used such that the armored plate **1212** may be removed when disassembling the firing range. For example, bolts, rivets, and/or other fasteners may be inserted through the armored plate **1212** and the armored plating **1206** to secure the armored plate **1212** to the armored plating **1206**. This process may be done prior to affixing the rubber layer **1210** to the armored plating **1206**.

[0099] Each container edge **1202** may include one or more cleats **1214** that are positioned along the edge **1202**. The cleats **1214** may have a fixed portion **1216** that is secured to the edge **1202** using welds, fasteners, and/or other securement techniques. Each cleat **1214** may also include a securing portion **1218** that is configured to contact the securing portion **1218** of another cleat **1214** when two containers **1200** are aligned and adjacent with one another. Fastening mechanisms **1220** may be used to secure the adjacent cleats **1214** together to secure the containers **1200** in gapless contact with one another. For example, in some embodiments bolts or rivets may be inserted through apertures defined by each securing portion **1218** to lock the two cleats **1214** together. In other embodiments, clamps or other mechanisms may be used to hold the cleats **1214** in engagement with one another.

[0100] FIGS. **13** and **13**A demonstrate the positioning and usage of cleats **1302** (similar to cleats **1214**) to secure two containers **1300** together. Here, a number of cleats **1302** are spaced along the sides and top of the mating edges **1304** of the containers **1300** (although in some embodiments cleats **1302** may only be included on one or two of the sides and/or top) at equal intervals to connect the containers **1300** together in an end to end fashion (although similar arrangements may also be used to mate containers **1300** in a side by side fashion). For example, cleats **1302** may be spaced apart every 1-10 feet from one another, with intervals of every 2-5 feet common, and intervals of every 2.5 feet being more common. Each cleat **1302** may be similar to an angle bracket and may include a fixed portion **1306** and a securing portion **1308**. Fixed portion **1306** may be secured in a parallel fashion to the outer surface **1310** of an edge **1304** of container **1300** such that an outer face of the fixed portion **1306** is parallel to and faces/contacts the outer surface **1310** of the container **1300**. Fixed portion **1306** may be secured to the outer surface **1310** of the container **1300** using fasteners (such as bolts or rivets) and/or by welding. In some embodiments, such as where ISO containers are not used, cleat **1302** may be formed integrally with the container **1300**. In such embodiments, the fixed portion **1306** may be a part of the outer surface **1310** and may or may not project outward from the rest of the outer surface **1310**.

[0101] Securing portion **1308** may project at a substantially 90° angle from the fixed portion **1306** and may provide a mating surface for two cleats **1302** to be brought into contact with and secured to one another to secure the containers **1300** together. Together the fixed portion **1306**

and the secured portion **1308** make up a generally L-shaped cleat **1302**. Securing portion **1308** may define a number of apertures that are configured to receive fasteners **1312**, such as bolts or rivets, that, when tightened, secure the cleats **1302** together. In some embodiments, rather than (or in addition to) using fasteners inserted through apertures in the securing portion **1308**, clamps or other fastening mechanisms may be used to couple the cleats **1302** together.

[0102] Oftentimes, cleats **1302** may be between 6 inches and 2 feet in length, and lengths of about 1 foot in length are common. The fixed portion **1306** and/or securing portion may form mating flanges or surfaces that are between about 1 inch and 6 inches in width, with widths of between about 2 and 4 inches being common. It will be appreciated that the size and/or number of cleats **1302** used in a particular application may be based on the strength requirements of a particular connection, as well as the geometry of the edges **1304** of the container **1300**.

[0103] In some embodiments, the spacing and number of cleats **1302** may be selected to provide the greatest level of flexibility in designing modular firing range arrangements. For example, the spacing and number of cleats **1302** may not only allow for the containers **1300** to be perfectly aligned as illustrated here, but may also allow for some or all of the containers **1300** to be staggered relative to one another. For example, one container **1300** may be mated alongside two different containers, such as to include a sidewall pod that needs to be positioned adjacent and overlapping two containers on one side to provide a particular lateral position for a lateral shooting target that does not perfectly align with one individual container of the main firing range. In such embodiments, it is possible that only a portion of each of the two separation walls of the containers of the main firing range to be removed such that when mated with the one container **1300**, the two partial openings provided by removal of the portion of the sidewalls combine to form an opening matching that of the single container **1300** to provide a seamless appearance while still providing 360° of ballistic containment.

[0104] Such placement of cleats **1302** may also allow containers **1300** to be positioned at various orientations to one another. For example, some or all of the containers may be placed such that an end of one container is positioned against a sidewall of another container **1300**. This enables greater flexibility in firing range arrangement (although it may require additional standard container types to be manufactured and/or modified on site by removing some or all of an existing end or sidewall and replacing it with a support structure such as described in relation to FIG. **9**A), as nearly any combination and arrangement of containers **1300** may be combined to form a custom firing range to meets the training needs and/or space restrictions of a particular application.

[0105] In embodiments using cleated connections, a container's physical dimensions are measured and a centerline is taken in both directions. Location cleats **1302** are then affixed to the container **1300** prior to shipping. For example, the cleats **1302** may be placed at regular intervals from the location of the centerline of the container **1300**, either by centering the first cleat **1302** or by spacing two cleats **1302** equidistant from the centerline. This ensures that when the cleats **1302** are aligned, the containers **1300** will be aligned at their centers and will eliminate any possible gaps in the containers **1300** that result from the manufacturing tolerances of the containers **1300** when slightly misaligned as any differences in size will result in the thickness of the container **1300** creating at least some overlap between adjacent containers **1300**, thereby covering up any possible gaps between the containers **1300** caused by normal misalignment. This, in combination with the use of armored plates, such as armored plate **1212**, to cover gaps formed between armor plating of the containers **1300** ensures that ballistic containment is maximized and the ability for turbulent airflow is minimized when the containers **1300** are mated.

[0106] Once the cleats **1302** are aligned, the containers **1300** may then be complexed together using the cleats **1302** as a "hard stop" to help ensure all containers **1300** are located at the centers. Internal armored steel plates can then be set out from the centerline to create full ballistic containment. It will be understood, however, that particular dimensions, (e.g., length and width) are provided as examples, and alternative embodiments may have different dimensions. Such embodiments can mitigate the manufacturing tolerances of the containers and provide full ballistic containment, increase firing lane width by eliminating the use of baffles, and reduce turbulence in airflow.

[0107] Typically, conventional modular firing range solutions provided lighting using angled baffles **1400** to provide armor for ballistic containment, while adding light fixtures **1402** in the gaps provided between the angled baffles **1400** as demonstrated in FIG. **14**. A major problem with such designs is the resulting gap **1404** in ballistic containment created by the area between the baffles **1400** in which the light fixture **1402** was placed. Additionally, such use of baffles **1400** creates unnecessary shadows as the light emitted from the light fixtures **1402** is partially obstructed by the lower portion of the baffle **1400**. To alleviate such issues, embodiments of the present invention may include a flat, reinforced ceiling, which may serve to increase the floor to ceiling height relative to baffled ceiling designs, while maintaining a 360° area of ballistic containment for the live fire rounds. For example, as illustrated in FIG. **15**, armored plating **1502** (such as AR500 ballistic steel, although other steel alloys and/or types of ballistic plating may be utilized) extends along a top of a roof structure of a container **1500** A lighting unit **1504** is mounted to the armored plating **1502** such that the lighting element **1504** extends below the armored plating **1502** and into the interior of the container **1500** and a cable **1506** extends through a small hole formed in the armored plating **1502**. To protect the cable hole, a steel plate hood **1508** may be positioned about all or part of the cable hole in some embodiments. Oftentimes, the hood **1508** may be positioned downstream of an expected firing direction, although other placements are possible. To protect the lighting element **1504**, an armored fin plate **1510** may be positioned on one or more sides of the lighting element **1504**. While shown here as only being provided on an up range side of lighting element **1504**, it will be appreciated that fin plates **1510** may be positioned on other or all lateral sides of the lighting element **1504**. The fin plate(s) **1510** may extend downward from the armored plating **1502** and protect the lighting element **1504** from fired ballistic projectiles, while eliminating the gaps in ballistic protection that are present when baffles are utilized.

[0108] Oftentimes, an anti-ricochet material **1514**, such as a rubber, polyboard, and/or other material (oftentimes between about 30 mm and 50 mm thick, with thicknesses

between 35 mm and 45 mm being common, although other thicknesses may be utilized) may be affixed to the armored plating **1502**. This may be done by affixing the anti-ricochet material **1514** to channels **1512** and/or other mounting structures that may be coupled with the armored plating **1502** and provide a gap between the armored plating **1502** and the anti-ricochet material **1514**. In some embodiments, the fin plate **1510** may extend into the interior of the container **1500** such that a distal end of the fin plate **1510** is substantially flush with an inner surface of the anti-ricochet material **1514** to provide a seamless finish while maximizing the amount of protection for the lighting element **1504**. Such arrangements also minimize the amount of obstruction of light emitted from lighting element **1504**, thereby minimizing any shadows produced by the ballistic containment system.

[0109] While described generally as being constructed from standard ISO containers, it will be appreciated that some applications may involve the use of specially constructed containers, such may be manufacture to custom sizes, shapes (i.e., non-rectangular), tolerances, and/or other specifications to meet the needs of a particular application. Such embodiments, while increasing manufacturing costs, may provide more robust systems with greater flexibility in customizable options.

[0110] In some embodiments, the various containers described herein may come with pre-installed internal hardware to make assembly as simple as connecting the containers in the desired arrangement. For example, containers B**1**-B**3** may include pre-installed shooting stalls, targets, target rails (for moving targets) and/or other hardware, while containers C**1**-C**3** may include pre-installed bullet traps and/or targets, as well as ductwork for HVAC systems. Containers A**1**-A**3** may include monitoring stations, computer and/or control equipment, and/or ductwork for HVAC connections. In other embodiments, the containers may merely provide a simple system of generating a ballistic containment perimeter, but equipment may need to be installed on-site. While more labor intensive, such embodiments may provide greater flexibility in customization options.

[0111] It will be appreciated that the various embodiments described herein may be utilized together to create optimum modular firing ranges to meet the needs of a particular application. For example, modular container systems such as described in relation to FIGS. **1** and/or **3** may be utilized with the HVAC container systems, sidewall pods, support structures, cleated connections, and/or light protection systems described herein in any combination to meet the particular needs of a firing range application. Moreover, while described with particular general arrangements (e.g., control area, firing range, bullet traps, etc.) it will be appreciated that any arrangement of containers and/or internal components is possible. The described embodiments are merely provided as examples and additional equipment may be added and/or described equipment may be omitted in accordance with the present invention to achieve the desired training environment.

[0112] FIG. **16** is a flowchart depicting a process **1600** for assembling a modular firing range according to embodiments. Process **1600** may be performed using any of the modular containers described herein. Process **1600** begins at block **1602** by selecting a plurality of modular containers from each of a first subset of modular containers, a second subset of modular containers, and a third subset of modular containers. The first subset of modular containers may include outer walls that define the first end of the modular firing range and side walls that define a first portion of a side of the modular firing range. For example, containers A**1**-A**3** and/or D**1** may fall into the first subset as either alone (D**1**) or in combination (A**1** and A**3**, possibly in combination with A**2**) have walls on three sides that can form a closed first end of the modular firing range and at least a portion of the closed sides of the modular firing range. The second subset of modular containers may include outer walls that define the second end of the modular firing range and side walls that define a second portion of the side of the modular firing range. For example, containers C**1**-C**3** and/or D**3** may fall into the first subset as either alone (D**3**) or in combination (C**1** and C**3**, possibly in combination with C**2**) have walls on three sides that can form a closed second end of the modular firing range and at least a portion of the closed sides of the modular firing range. The third subset may include modular containers that are coupleable between the first subset and the second subset to form a medial portion of the modular firing range. To do so, the third subset may include outer walls that define a third portion of the side of the modular firing range. For example, containers B**1**-B**3** and/or D**2** may fall into the first subset as either alone (D**2**) or in combination (B**1** and B**3**, possibly in combination with B**2**) have walls on two opposing sides that can form at least a portion of the closed sides of the modular firing range. It will be appreciated that any number of containers of type B, containers D**2**, and/or containers A**2**, B**2**, C**2** may be used in a particular firing range, as these containers may be added and/or subtracted to adjust the length and/or width of the modular firing range to meet the needs of a particular training application.

[0113] At block **1604**, the selected plurality of modular containers are arranged to form a desired layout for the modular firing range. This may involve ensuring that a continuous outer wall is formed around at least a portion of the firing range that is to confine the live firing exercises. Depending on the containers chosen and the desired arrangement, the containers may be coupled in an end to end configuration and/or side by side configuration. Oftentimes, the modular firing range will be designed to include a control area in the first subset of modular containers, a plurality of firing lanes in the third subset of modular containers, at least one bullet trap in the second subset of modular containers, and/or a number of targets in the second and/or third subsets. However, it will be appreciated that numerous other arrangements are possible that include these and/or other features, as well as that may omit some of these features entirely or place some or all of the disclosed features in different subsets of modular containers. In some embodiments, some or all of the modular containers may be in staggered alignment with one another.

[0114] At block **1606**, the selected plurality of modular containers are coupled together to form an armored outer perimeter that provides complete ballistic containment in all directions. In some embodiments, this may include fastening each of a plurality of angled cleats of each of the selected plurality of modular containers to a respective one of the plurality of angled cleats on an adjacent one of the selected plurality of modular containers. Such a process is described in greater detail with respect to FIG. **18**. In some embodiments, a number of armored plates may be coupled to

adjacent ones of the modular containers to cover joints formed between the adjacent ones of the modular containers. This may be done to ensure that a continuous ballistic containment area is maintained, even at connection points between the various containers. After the containers are coupled together, process **1600** may optionally include covering an interior surface of the armored perimeter with an anti-ricochet material, which may provide sound insulation to the firing range, as well as prevent dangerous ricochets of projectiles and to provide a more finished appearance.

[0115] It will be appreciated that process **1600** may also include the use of containers having support structures to enable open floor plan concepts as described herein. Additionally, process **1600** may include the use of sidewall pods, light protection systems, and/or the connection of HVAC systems as described elsewhere herein.

[0116] FIG. **17** is a flowchart depicting a process **1700** for assembling a modular firing range according to another embodiment of the invention. Process **1700** may be performed using any of the modular containers D**1**-D**3** described herein. Process **1700** begins at block **1702** by selecting a first modular container, a second modular container, and plurality of additional modular containers. The first modular container is configured to form a first end of the modular firing range and includes two end walls and a first lateral sidewall. For example, the first container may be container D**1** as container D**1** includes walls on three sides that can form a closed first end of the modular firing range and at least a portion of the closed sides of the modular firing range. The second modular container is configured to form a second end of the modular firing range and includes two end walls and a second lateral sidewall. example, the first container may be container D**3** as container D**3** includes walls on three sides that can form a closed first end of the modular firing range and at least a portion of the closed sides of the modular firing range. The plurality of additional modular containers are coupleable between the first modular container and the second modular container to form a medial portion of the modular firing range. Each of the plurality of additional modular containers may include two end walls and no lateral sidewalls. For example, each additional container may be a container D**2** as container D**2** includes walls on two ends that can form at least a portion of the closed sides of the modular firing range.

[0117] At block **1704**, the selected plurality of modular containers are arranged to form a desired layout for the modular firing range. This may involve ensuring that a continuous outer wall is formed around at least a portion of the firing range that is to confine the live firing exercises. The containers may be coupled in a side by side configuration. Oftentimes, the modular firing range will be designed to include a control area in the first modular container, a plurality of firing lanes in the additional modular containers, at least one bullet trap in the second modular container, and/or a number of targets in the second modular container and/or the additional plurality of modular containers. However, it will be appreciated that numerous other arrangements are possible that include these and/or other features, as well as that may omit some of these features entirely or place some or all of the disclosed features in different modular containers.

[0118] At block **1706**, the selected plurality of modular containers are coupled together to form an armored outer perimeter that provides complete ballistic containment in all directions. In some embodiments, this may include fastening each of a plurality of angled cleats of each of the selected plurality of modular containers to a respective one of the plurality of angled cleats on an adjacent one of the selected plurality of modular containers. Such a process is described in greater detail with respect to FIG. **18**. In some embodiments, a number of armored plates may be coupled to adjacent ones of the modular containers to cover joints formed between the adjacent ones of the modular containers. This may be done to ensure that a continuous ballistic containment area is maintained, even at connection points between the various containers. After the containers are coupled together, process **1700** may optionally include covering an interior surface of the armored perimeter with an anti-ricochet material, which may provide sound insulation to the firing range, as well as prevent dangerous ricochets of projectiles and to provide a more finished appearance.

[0119] It will be appreciated that process **1700** may also include the use of containers having support structures to enable open floor plan concepts as described herein. Additionally, process **1700** may include the use of sidewall pods, light protection systems, and/or the connection of HVAC systems as described elsewhere herein.

[0120] FIG. **18** is a flowchart depicting a process **1800** for assembling a modular firing range according to another embodiment of the invention. Process **1800** may be performed using any of the modular containers described herein. Process **1800** may begin at block **1802** by positioning a first modular container adjacent to a second modular container such that open interiors defined by each of the first modular container and the second modular container are joined to form at least a portion of the modular firing range and such that adjacent edges of the first modular container and the second modular container are in alignment with one another. The modular containers may be selected from any of the modular containers described herein (including sidewall pods and/or HVAC containers and/or storage containers) and may be positioned in any arrangement desired for a particular training application.

[0121] Once the modular containers are in the desired position, each of a first plurality of cleats of the first modular container may be coupled with a respective one of a second plurality of cleats of the second modular container at block **1804** to secure the first modular container and the second modular container together. For example, each of the first plurality of cleats may be aligned with the second plurality of cleats when the first modular container and the second modular container are in alignment with one another. Coupling each of the first plurality of cleats with the respective one of the second plurality of cleats may then involve securing each of the first plurality of cleats to the respective one of the second plurality of cleats using a fastener and/or clamping mechanism. For example, each cleat may be similar to cleats **1214** and/or **1302** described herein and may include a fixed portion that is mounted on a respective one of the plurality of modular containers and a securing portion that is configured to be removably secured to the securing portion of a corresponding one of the plurality of cleats. In some embodiments, the cleats have a generally L-shaped cross-section with one arm of the L being the fixed portion and the other arm of the L being the securing portion. The fixed portion of each of the plurality of cleats may be permanently or semi-permanently coupled with one of the plurality of modular containers, while the securing portion

of each of the cleats is secured to the securing portion of a corresponding one of the cleats using one or more clamps and/or one or more fasteners that are inserted through the cleats. In some embodiments, the cleats may be spaced apart from each other by a distance of between about 1-10 feet along the edges of the containers. IN some embodiments, each of the plurality of cleats is between about 6 inches and 2 feet in length and the fixed portion and the securing portion form mating flanges or surfaces that are between about 1 inch and 6 inches in width.

[0122] In some embodiments, the process **1800** may optionally include positioning a third modular container adjacent to one or both of the first modular container or the second modular container such that an edge of the third modular container is adjacent one or both of the first modular container or the second modular container. The process **1800** may then involve coupling each of a third plurality of cleats of the third modular container with a respective one of a fourth plurality of cleats of one or both of the first modular container or the second modular container. It will be appreciated that any number of containers may be coupled together in such fashion.

[0123] In some embodiments, the users of the modular firing range may wish to disassemble the modular firing range. In such embodiments, process **1800** may include decoupling each of the first plurality of cleats from the respective one of the second plurality of cleats and separating the first modular container from the second modular container.

[0124] In some embodiments, each of the plurality of modular containers comprises an armored layer. Process **1800** may optionally include securing an armored plate to the armored walls of the first modular container and the second modular container such that the armored plate extends across and covers a joint formed between the armored walls of the first modular container and the second modular container.

[0125] FIG. **19** is a flowchart depicting a process **1900** for a creating modular firing range having an open floor plan. Process **1900** may be performed using any of the modular containers described herein and may include any arrangement of modular firing range needed for a particular application. Process **1900** may begin by removing at least one sidewall of a first modular container at block **1902**. For example, the removed sidewall(s) may include an end wall and/or lateral sidewall of a modular container which has been cut or otherwise removed using mechanical, heat, laser, and/or other cutting techniques (or modular container may be initially formed without the one or sidewalls). In some embodiments, 1, 2, 3, 4 (or more if the container is non-rectangular) sidewalls may be removed from a single container, with some containers having only 0, 1, 2, or 3 sidewalls remaining. The at least one sidewall of the first modular container may be replaced with a first support structure at block **1904**. The first support structure may include a first support beam coupled to a top edge of the first modular container and two or more columns supporting the first support beam. The connection between the first support beam and the two or more columns may be formed in any manner, such as those described in relation to FIG. **9**A. At block **1906** at least one sidewall of a second modular container, which may be done in a similar manner as described above. At block **1908**, the at least one sidewall of the second modular container may be replaced with a second support structure, which may include a second support beam coupled to a top edge of the second modular container and two or more columns supporting the second support beam.

[0126] At block **1910**, the first modular container may be with the second modular container such that the two or more columns supporting the first support beam are substantially aligned with the two or more columns supporting the second support beam. This connection may be achieved using cleated connection techniques such as described elsewhere herein. In some embodiments, process **1900** further includes covering the aligned two or more columns of each of the first modular container and the second modular container with an anti-ricochet material. Some or all of the remaining exposed interior surfaces of the containers may also be covered with such a material.

[0127] In some embodiments, the support structures have generally U-shaped profiles, such as when only two columns are used in each support structure. In such cases, the columns may each be positioned in a corner of where the removed sidewall used to be located. In other embodiments, the support structures have generally M-shaped profiles. Such embodiments occur when a medial column is provided between two other columns.

[0128] FIG. **20** is a flowchart depicting a process **2000** for connecting an HVAC system with a modular firing range. Process **2000** may involve any of the modular container configurations described herein. Process **2000** may begin at block **2002** by coupling a first modular container that includes an HVAC supply unit with a first end of a modular firing range. The modular firing range be formed from at least one firing range modular container defining one or more firing lanes, such as a firing range constructed in accordance with the techniques described herein. The first modular container may define at least one air intake opening that is in fluid communication with the HVAC supply unit. The HVAC supply unit may include one or more HVAC units selected from an air conditioning unit, a heating unit, a humidifier, a dehumidifier, an air purification unit, and/or a refrigeration unit. Multiple of one or more of the same type of HVAC units may be used in a single container in some embodiments. In some embodiments, the one or more HVAC units are selected to simulate environmental conditions for a particular mission that is a subject of a particular training session as described in greater detail above with regards to FIG. **7**.

[0129] Process **2000** may also include coupling a second modular container comprising an HVAC extraction unit with a second end of the modular firing range at block **2004**. The second modular container may define at least one air vent opening that is in fluid communication with the HVAC extraction unit. In some embodiments, the HVAC extraction unit includes one or more fans that are configured to draw air out of the modular firing range. Both the first modular container and second modular container may be in vertical alignment with the modular firing range such that connections between the modular firing range and the HVAC containers may be made in a horizontal facing surface to enable improved weatherproofing of the HVAC connections. These connections may be done using ductwork in some embodiments.

[0130] FIG. **21** is a flowchart depicting a process **2100** of installing a modular sidewall enhancement onto a modular firing range according to one embodiment of the invention. Process **2100** may be done using any of the modular

containers, firing ranges, and/or techniques described herein. Process **2100** may begin at block **2102** by assembling a main firing range body by coupling a plurality of modular containers to define a portion of an interior of the modular firing range in accordance with the disclosure herein. The interior of the modular firing range may define a plurality of firing lanes for live fire training exercises. At block **2104**, at least one sidewall pod is coupled to at least one of the plurality of modular containers adjacent the plurality of firing lanes such that the at least one sidewall pod protrudes outward in a lateral direction from the plurality of firing lanes. The at least one sidewall pod is formed from at least one additional modular container. The at least sidewall pod includes one open side and walls on remaining sides such that the one open side is joined with the interior of the modular firing range. In some embodiments, the at least one sidewall pod overlaps and is coupled to two of the plurality of modular containers of the modular firing range. The connection between the sidewall pod and the modular containers may be done using the cleated connection techniques described herein. Additionally, process **2100** may include coupling at least one armored plate between the at least one sidewall pod an adjacent container of the plurality of modular containers of the modular firing range so as to cover a joint formed between the at least one sidewall pod and the adjacent container.

[0131] In some embodiments, the at least one sidewall pod has a depth that is less that a length of the plurality of firing lanes to provide close range live fire engagement training opportunities. In some embodiments, the at least one sidewall pod includes a first sidewall pod on a first side of the modular firing range and a second sidewall pod on a second side of the modular firing range. The outer periphery defined by outer walls of the modular firing range and the at least one sidewall pod forms an armored outer perimeter that provides complete ballistic containment in all directions.

At block **2106**, at least one target and at least one bullet trap are installed in the at least one sidewall pod to provide lateral live fire engagement training opportunities.

[0132] FIG. **22** is a flowchart depicting a process **2200** for assembling a light protection system for a modular firing range. Process **2200** may be performed on any of the modular containers described herein, including storage containers, HVAC containers, sidewall pods, and the like. Process **2200** may begin at block **2202** by mounting a lighting element to armored plating that forms all or part of a ceiling structure of a modular firing range such that the lighting element is positioned within an interior of the modular firing range with a power cable of the lighting element extending through an aperture defined by the armored plating. In some embodiments, the armored plating includes AR500 steel and/or other steel alloy and may be between about 5 mm and 10 mm thick, although other thicknesses may be contemplated. For example, in embodiments in which the walls may be directly shot at, such as for sidewall pod embodiments, the thickness of the armored plating may be increased. At block **2204**, a fin plate is affixed to the armored plating such that the fin plate extends downward from the armored plating and is positioned at least on a side of the lighting element that is proximate a live fire shooting location of the modular firing range. The fin plate may be configured to protect the lighting element from ballistic projectiles.

[0133] In some embodiments, process **2200** may optionally include affixing an anti-ricochet material to the armored plating. This may be done, for example, by using a number of channels that are coupled between the anti-ricochet material and the armored plating. An inner surface of the anti-ricochet material and a distal surface of the fin plate may be substantially flush with one another. In some embodiments, the anti-ricochet material comprises one or both of a rubber material or a polyboard material and may be between about 30 mm and 50 mm thick. Process **2200** may optionally include coupling a ballistic hood with the armored plating on an outer surface of the armored plating. The ballistic hood may be configured to protect the aperture from ballistic projectile

[0134] It will be appreciated that while described as separate processes, some or all processes **1600-2200** may be performed together (in whole or in part) to form a single modular firing range in accordance with the principles of the present disclosure. As just example, each container connection may be done using the cleated connection and/or open floor plan techniques described herein. Similarly, the use of light protection systems, HVAC systems, and sidewall pods may all be used in accordance with any of the processes described herein. Furthermore, while often described as being connected using cleated connections, it will be appreciated that in certain embodiments other container connection mechanisms may be utilized in addition to, or alternatively to, cleated connected as described herein. Additionally, some embodiments may use different mechanisms than described herein to enable open floor plans. Some embodiments may include features of one system described herein, while being combined with other solutions for creating modular firing ranges in accordance with the present invention.

[0135] The methods, systems, and devices discussed above are examples. Some embodiments were described as processes depicted as flow diagrams or block diagrams. Although each may describe the operations as a sequential process, many of the operations can be performed in parallel or concurrently. In addition, the order of the operations may be rearranged. A process may have additional steps not included in the figure.

[0136] It should be noted that the systems and devices discussed above are intended merely to be examples. It must be stressed that various embodiments may omit, substitute, or add various procedures or components as appropriate. Also, features described with respect to certain embodiments may be combined in various other embodiments. Different aspects and elements of the embodiments may be combined in a similar manner. Also, it should be emphasized that technology evolves and, thus, many of the elements are examples and should not be interpreted to limit the scope of the invention.

[0137] Specific details are given in the description to provide a thorough understanding of the embodiments. However, it will be understood by one of ordinary skill in the art that the embodiments may be practiced without these specific details. For example, well-known structures and techniques have been shown without unnecessary detail in order to avoid obscuring the embodiments. This description provides example embodiments only, and is not intended to limit the scope, applicability, or configuration of the invention. Rather, the preceding description of the embodiments will provide those skilled in the art with an enabling descrip-

tion for implementing embodiments of the invention. Various changes may be made in the function and arrangement of elements without departing from the spirit and scope of the invention.

[0138] Having described several embodiments, it will be recognized by those of skill in the art that various modifications, alternative constructions, and equivalents may be used without departing from the spirit of the invention. For example, the above elements may merely be a component of a larger system, wherein other rules may take precedence over or otherwise modify the application of the invention. Also, a number of steps may be undertaken before, during, or after the above elements are considered. Accordingly, the above description should not be taken as limiting the scope of the invention.

[0139] Also, the words "comprise", "comprising", "contains", "containing", "include", "including", and "includes", when used in this specification and in the following claims, are intended to specify the presence of stated features, integers, components, or steps, but they do not preclude the presence or addition of one or more other features, integers, components, steps, acts, or groups.

[0140] Unless defined otherwise, all technical and scientific terms used herein have the same meaning as commonly or conventionally understood. As used herein, the articles "a" and "an" refer to one or to more than one (i.e., to at least one) of the grammatical object of the article. By way of example, "an element" means one element or more than one element. "About" and/or "approximately" as used herein when referring to a measurable value such as an amount, a temporal duration, and the like, encompasses variations of ±20% or ±10%, ±5%, or +0.1% from the specified value, as such variations are appropriate to in the context of the systems, devices, circuits, methods, and other implementations described herein. "Substantially" as used herein when referring to a measurable value such as an amount, a temporal duration, a physical attribute (such as frequency), and the like, also encompasses variations of ±20% or ±10%, ±5%, or +0.1% from the specified value, as such variations are appropriate to in the context of the systems, devices, circuits, methods, and other implementations described herein.

[0141] As used herein, including in the claims, "and" as used in a list of items prefaced by "at least one of" or "one or more of" indicates that any combination of the listed items may be used. For example, a list of "at least one of A, B, and C" includes any of the combinations A or B or C or AB or AC or BC and/or ABC (i.e., A and B and C). Furthermore, to the extent more than one occurrence or use of the items A, B, or C is possible, multiple uses of A, B, and/or C may form part of the contemplated combinations. For example, a list of "at least one of A, B, and C" may also include AA, AAB, AAA, BB, etc.

What is claimed is:

1. A method of assembling a modular firing range, comprising:

selecting a plurality of modular containers from each of a first subset of modular containers, a second subset of modular containers, and a third subset of modular containers, wherein:

the first subset comprises outer walls that define the first end of the modular firing range and side walls that define a first portion of a side of the modular firing range;

the second subset comprises outer walls that define the second end of the modular firing range and side walls that define a second portion of the side of the modular firing range; and

the third subset comprises modular containers that are coupleable between the first subset and the second subset to form a medial portion of the modular firing range, the third subset comprising outer walls that define a third portion of the side of the modular firing range;

arranging the selected plurality of modular containers to form a desired layout for the modular firing range; and

coupling the selected plurality of modular containers together to form an armored outer perimeter that provides complete ballistic containment in all directions.

2. The method of assembling a modular firing range of claim **1**, wherein:

the modular firing range comprises a control area, a plurality of firing lanes, a plurality of shooting targets, and at least one bullet trap.

3. The method of assembling a modular firing range of claim **1**, wherein:

coupling the selected plurality of modular containers together comprises fastening each of a plurality of angled cleats of each of the selected plurality of modular containers to a respective one of the plurality of angled cleats on an adjacent one of the selected plurality of modular containers.

4. The method of assembling a modular firing range of claim **1**, further comprising:

coupling a plurality of armored plates to adjacent ones of the selected plurality of modular containers to cover joints formed between the adjacent ones of the selected plurality of modular containers.

5. The method of assembling a modular firing range of claim **1**, wherein:

the modular containers of the first subset are configured to be coupled to one another in a side by side arrangement;

the modular containers of the first subset are configured to be coupled to a first end of one of the modular containers of the third subset;

the modular containers of the second subset are configured to be coupled to one another in a side by side arrangement;

the modular containers of the second subset are configured to be coupled to a second end of one of the modular containers of the third subset; and

the modular containers of the third subset are configured to be coupled to one another in one or both of a side by side or an end to end arrangement.

6. The method of assembling a modular firing range of claim **1**, further comprising:

covering an interior surface of the armored perimeter with an anti-ricochet material.

* * * * *