(12) PATENT
(19) AUSTRALIAN PATENT OFFICE

(11) Application No. AU 199852963 B2
(10) Patent No. 723408

(54) Title

Oxygen concentrator

(51)[6] International Patent Classification(s)
A62B 007/02 A61M 016/00

(21) Application No: 199852963 (22) Application Date: 1998.02.06

(30) Priority Data

(31) Number	(32) Date	(33) Country
08/797828	1997.02.10	US

(43) Publication Date : 1998.08.13
(43) Publication Journal Date : 1998.08.13
(44) Accepted Journal Date : 2000.08.24

(71) Applicant(s)
Litton Systems Inc.

(72) Inventor(s)
Kevin Gene McCulloh; Dale Louis Selhost; John W Henneman; Kelly M Coffield

(74) Agent/Attorney
GRIFFITH HACK,GPO Box 3125,BRISBANE QLD 4001

(56) Related Art
US 4428372
US 4552571
US 4576616

ABSTRACT OF THE DISCLOSURE

An apparatus for providing oxygen-enriched air at a first pressure and at a second pressure, the second pressure being greater than the first pressure. The apparatus comprises, in combination, a pressure swing adsorption system and a pressure intensifier. The pressure swing adsorption system for enriching the oxygen content of air has a pressure of at least the first pressure. The pressure swing adsorption system is adapted to provide oxygen-enriched air to a first outlet at the first pressure and to provide oxygen-enriched air to a pressure intensifier at the first pressure. The pressure intensifier pressurizes the oxygen-enriched air and provides the oxygen-enriched air to a second outlet at the second pressure.

P/00/011
Regulation 3.2

AUSTRALIA

Patents Act 1990

ORIGINAL

COMPLETE SPECIFICATION

STANDARD PATENT

Invention Title: OXYGEN CONCENTRATOR

The following statement is a full description of this invention, including the best method of performing it known to us:

GH REF: P50673A/PJW

AUSTRALIAN INDUSTRIAL
BRISBANE
- 6 FEB 1998
PROPERTY ORGANISATION

OXYGEN CONCENTRATOR

Field of the Invention

The present invention provides an oxygen concentrator and cylinder recharger and in particular provides a home health care oxygen concentrator and a cylinder recharger that is capable of simultaneously or independently providing oxygen-enriched air at a low pressure and at a high pressure. Such provision of oxygen-enriched air at two different pressures enables the apparatus to be utilized for the provision of oxygen-enriched air at a pressure suitable for use by a patient while at the same time providing oxygen-enriched air at a pressure suitable for recharging of a cylinder, thereby providing the patient with the option to be mobile.

Background of the Invention

There are a number of instances where the provision of oxygen-enriched air, sometimes referred to as oxygen, is required to be provided at a low pressure. One particular situation where such low pressure oxygen-enriched air is required is in the health care field, both in the health care field within various institutions as well as within a patient's home. In such situations, it may be necessary to provide a continuous flow of low pressure oxygen-enriched air to a patient on an on-going basis. While such patients may be able to withstand the absence of the flow of oxygen-enriched air for short periods of time, such patients frequently are unable to withstand the absence of such a flow of oxygen-enriched air for longer periods of time without suffering major health problems. In particular, such patients are normally not able to move from one location to another without oxygen-enriched air.

Systems for the provision of a flow of low pressure oxygen-enriched air include distillation processes, adsorption separation processes and membrane separation

processes. One such process is a so-called pressure swing adsorption (PSA) process which has the advantage of being able to provide oxygen-enriched air in a short period of time after the supply of a suitable feed gas e.g. compressed air, to the apparatus. An example of a pressure swing adsorption process is described in U.S. Patent 4,948,391 of Y. Noguchi, which issued August 14, 1990.

A typical pressure swing adsorption process applied to the provision of oxygen-enriched air could comprise the following steps:

a) introducing air under pressure into a cylinder having an adsorption column of an adsorbent which selectively adsorbs nitrogen,

b) continuing the introduction of the air into the cylinder such that a zone of the adsorbed gas (nitrogen) moves forward through the cylinder,

c) collecting the desired gas (oxygen) that passes from the cylinder,

d) terminating the introduction of air to the cylinder,

e) terminating the collection of oxygen from the cylinder,

f) discharging a portion of the pressurized gas remaining in the cylinder, and

g) returning a portion of the oxygen back into the cylinder to flow through the column in the opposite direction to desorb the gas (nitrogen) adsorbed on the adsorbent and to purge the desorbed gas (nitrogen) from the cylinder.

Steps (a)-(e) effect the separation of nitrogen from the air so as to provide oxygen-enriched air, whereas steps (f) and (g) effect regeneration of the column used in the process. This permits continuous and long-term use of the pressure swing adsorption process to provide oxygen-enriched air.

One of the disadvantages of known processes for the

supply of oxygen-enriched air at low pressure is that such processes lack the flexibility to allow the patient to be located at a fixed location but also to be able to move from that location with relative ease with an assurance that the source of oxygen-enriched air is sufficient. For instance, the patient may wish or need to be able to move from a bed or other similar location, e.g. to use toilet facilities, prepare meals, go to another room or change locations for other reasons. Such mobility with existing processes generally requires a patient to be disconnected from a first source of low pressure oxygen-enriched air and to be re-connected to a second system for provision of such air and which is mobile e.g. a cylinder of oxygen-enriched air. The patient would want an assurance that the source of oxygen-enriched air is sufficient, which would be of particular concern if the patient wished to be mobile for an extended period of time e.g. a day or weekend, without having to re-fill the mobile, or ambulatory cylinder at a dealer or distributor.

Summary of the Invention

Apparatus has now been found that is capable of simultaneously providing low pressure oxygen-enriched air for use by a patient as well as high pressure oxygen-enriched air for the filling of a pressure cylinder.

Accordingly, one aspect of the present invention provides an apparatus for providing oxygen-enriched air including:

a low pressure oxygen-enriched air separation system for enriching the oxygen content of inlet air, the air separation system adapted to simultaneously provide oxygen-enriched air to a first outlet at a first pressure and adapted to simultaneously provide oxygen-enriched air to a second outlet at approximately the first pressure, and

a pressure intensifier connected to the second outlet to pressurize said oxygen-enriched air and to provide oxygen-enriched air to a high pressure cylinder at a second pressure;

wherein the air separation system is capable of

AUSTRALIAN PATENT OFFICE

simultaneously providing oxygen-enriched air to the first outlet continuously and the second outlet such that a flow of oxygen-enriched air can be supplied continuously to the first outlet while the pressure intensifier is pressurizing oxygen-enriched air to the second pressure.

In another aspect, the present invention provides a method for providing oxygen-enriched air at a first pressure and at a second pressure, the second pressure being greater than the first pressure, the method including:

feeding air to an air separation system;

simultaneously providing oxygen-enriched air from the air separation system to a first outlet at the first pressure and to a second outlet connected to a pressure intensifier at approximately the first pressure;

increasing the pressure of the oxygen-enriched air provided by the pressure intensifier to the second pressure;

wherein the air separation system is capable of simultaneously providing oxygen-enriched air to the first outlet and the second outlet such that a flow of oxygen-enriched air can be supplied continuously to the first outlet while said pressure intensifier is pressurizing the oxygen-enriched air to the second pressure.

In a further aspect, the present invention provides apparatus for providing oxygen-enriched air including:

an air compressor, a low pressure oxygen-enriched air separation system and a pressure intensifier;

the air compressor being adapted to provide compressed air to the oxygen-enriched air separation system;

the oxygen-enriched air separation system being adapted to simultaneously provide oxygen-enriched air to a first outlet at a first pressure and to the pressure intensifier at the first pressure, the pressure intensifier being adapted to provide oxygen-enriched air at a second pressure;

the first outlet having a controller to control the flow of oxygen-enriched air at the first outlet;

wherein the air separation system is capable of simultaneously providing oxygen-enriched air to the first outlet

AUSTRALIAN PATENT OFFICE

and the second outlet such that a flow of oxygen-enriched air can be supplied continuously to the first outlet while the pressure intensifier is pressurizing oxygen-enriched air to the second pressure.

In preferred embodiments of the apparatus and method of the present invention, the air separation system is a pressure swing adsorption system, and the oxygen-enriched air from the pressure swing adsorption system is provided either simultaneously or independently to the pressure intensifier.

In another preferred embodiment, the apparatus further includes an air compressor for providing air to the pressure swing adsorption system, the air compressor having an inlet and exhaust air sound suppression system.

Brief Description of the Drawings

The present invention is illustrated by the preferred embodiments shown in the drawings in which:

Figure 1 is a schematic representation in block format of apparatus of the invention;

Figure 2 is a schematic representation of the apparatus of Figure 1;

Figure 3 is a schematic representation of a fill port adaptor body;

Figure 4 is a schematic representation of a plan view of the fill port adaptor body;

AUSTRALIAN PATENT OFFICE

Figure 5 is a schematic representation of a cross section of the fill port adaptor body through lines A-A of Figure 4;

Figure 6 is a schematic representation of a cross section of the fill port adaptor body through lines D-D of Figure 4;

Figure 7 is a schematic representation of a cross section of a part of the fill port adaptor of Figure 6, through B-B;

Figure 8 is a schematic representation of a perspective view of a flow controller body;

Figure 9 is a schematic representation of an end view of the flow controller body of Figure 8;

Figure 10 is a schematic representation of a cross section of the flow controller body of Figure 9 through line A-A;

Figure 11A is a schematic representation of a compressor system; and

Figure 11B is a schematic representation of a compressor sound suppression system, through line B-B of Figure 11A.

Detailed Description of the Invention

The low pressure oxygen-enriched air separation system may be an oxygen generator, a distiller, an air separator or a membrane separator, but it will be described herein with reference to the preferred embodiment in which it is a pressure swing absorption system.

Fig. 1 shows apparatus of the invention, generally indicated by 100, in block format. Ambient air 101 is connected to compressor 102. Outlet 103 from compressor 102 is connected to pressure swing adsorber (PSA) 104 and pressure intensifier 109 (see Fig. 2). Outlet 105 from pressure swing adsorber 104 is connected to oxygen sensor 107, low pressure outlet 106, and through tubing 108, to pressure intensifier 109. Pressure intensifier 109 is

connected by tubing 111 to high pressure outlet 112, as well as being interconnected by tubing 110 to pressure swing adsorber 104.

In operation, ambient air enters air inlet 101 and is pressurized in compressor 102. The pressurized air is fed to pressure swing adsorber 104, as well as being fed to pressure intensifier 109 when the latter is energized (see Fig. 2). The oxygen-enriched air from pressure swing adsorber 104 is monitored by oxygen sensor 107, as well as fed to low pressure outlet 106 for use by a patient. In addition, oxygen-enriched air is fed to pressure intensifier 109. Pressurized oxygen-enriched air is fed from pressure intensifier 109 to high pressure outlet 112 where it may be used to re-charge a cylinder of oxygen-enriched air.

Fig. 2 shows an embodiment of an apparatus of the invention, generally indicated by 200, in greater detail. Apparatus 200 has inlet 101 connected in turn to particulate filter 201, tuned resonator 202 and to the inlet to compressor 203. Compressor 203 is driven by motor 204, and has relief valve 205. The outlet from compressor 203 is connected to a heat exchanger, generally indicated by 206, which has heat exchanger section 207 and cooling fan 208. Outlet tubing 209 from heat exchanger 207 is connected to two solenoid valves, 210 and 211, which are in a parallel relationship.

Solenoid valves 210 and 211 are connected to a tuned resonator 212. Each of solenoid valves 210 and 211 is connected to a sieve bed, 213 and 214 respectively, which are also in a parallel relationship. Sieve beds 213 and 214 are molecular sieve beds. Each of the outlets of sieve bed 213 and 214 is connected to a check valve, 215 and 216 respectively. In addition, sieve bed 213 and 214 are interconnected through orifice 217, the interconnection being located between the outlet of each of sieve bed 213 and 214 and each of check valves 215 and 216.

The outlets from each of check valves 215 and 216 are joined together, and connected to oxygen plenum 220. Oxygen plenum 220 is connected through orifice 221 to oxygen sensor 222 and filter 223, which is vented to the atmosphere. Oxygen plenum 220 is also connected to low pressure switch 237. The outlet of oxygen plenum 220 is connected in turn to pressure regulator 231, through orifice 232, filter 233, check valve 234, flow meter 235 to patient outlet 236. Patient outlet 236 is a low pressure outlet i.e. the pressure would normally be only a few inches of water, as will be understood by persons skilled in the art.

The outlet of the oxygen plenum 220 is also connected to a pressure intensifier generally indicated by 240. Pressure intensifier 240 has a first stage cylinder 241 and a second stage cylinder 242, with drive air cylinder 243 located therebetween. The opposed sides of drive cylinder 243 are connected through solenoid valves 244 and 245 to tubing between solenoid valve 210 and sieve bed 213, and tubing between solenoid valve 211 and sieve bed 214, respectively, of the pressure swing adsorber. Check valve 247 is located between oxygen plenum 220 and first stage cylinder 241. First stage cylinder 241 is also connected through check valve 248 and check valve 250 to second stage cylinder 242. Rupture disc 246 is attached to first stage cylinder 241 and rupture disc 251 is attached to second stage cylinder 242. Filters 252 and 253 are connected to first stage cylinder 241 and second stage cylinder 242, respectively, and vented to the atmosphere.

Check valve 249 is connected to filter 260, pressure switch 261 and pressure connection 262, which is the high pressure connection.

In an example of a typical operation of the embodiment of Figure 2, air enters air compressor 203 through inlet 101, particulate filter 201 and tuned resonator 202. Tuned resonator 202 is for sound

suppression of compressor 203. The air is compressed to the operating pressure e.g. a pressure ranging from 20 to 30 psig. The compressed air obtained is routed through a fan cooled tube and fin heat exchanger 206 which cools the air before it enters the molecular sieve beds 213 and 214. The cooling of the air from the compressor optimizes performance of the molecular sieve beds as well as cooling the oxygen-enriched air obtained from the beds before it reaches the patient. Air flow into and out of the beds is controlled by two solenoid valves (valve 210 and valve 211) which allow compressed air to either enter the bed or to be vented from the bed to atmosphere.

A normal three phase cycle is (i) a first filling phase to fill bed 213 and exhaust bed 214, (ii) an intermediate overlap phase and (iii) a second filling phase to fill bed 214 and exhaust bed 213.

In phase (i), solenoid valve 210 allows compressed gas to enter bed 213 while valve 211 is venting gas from bed 214 to atmosphere. The molecular sieve in bed 213 adsorbs water vapour and nitrogen from the compressed air, allowing oxygen and argon to pass through the sieve. A portion of the gas is used as product gas which is delivered to the patient as low pressure oxygen-enriched air. The remainder of the oxygen-enriched air passes through an orifice, 217, and purges nitrogen and water vapour out of bed 214 as it is vented to atmosphere through solenoid valve 211. At the end of this phase, which in a typical embodiment of the invention lasts approximately 8 seconds, the pressure in bed 213 is typically approximately 30 psig and in bed 214 it is typically slightly above zero psig. At this time, bed 213 is almost saturated with nitrogen and continued flow through this bed without purging would result in nitrogen breakthrough and loss of purity in the product gas.

In overlap phase (ii), there is an overlap of approximately 1.6 seconds in which both solenoid valves 210 and 211 are switched to allow flow into both

molecular sieve beds. This allows the air from sieve bed 213, initially at approximately 30 psig, as discussed above, to back flow through solenoid valve 210 into bed 214 which is initially at a low pressure. The crossflow of air in addition to the air from compressor provides a quick charge of bed 214, thereby reducing the compressor flow requirements and improving the efficiency of the system. At the end of the overlap cycle, the pressure in both beds is typically approximately 20 psig.

At the end of the overlap phase i.e. in phase (iii), solenoid valve 210 is switched to the vent position allowing bed 213 to vent to atmosphere until the pressure is only slightly above zero. Venting the bed to atmosphere plus back filling with product gas from bed 214 purges nitrogen and water vapour from bed 213 in preparation for the next cycle. At the same time bed 214 is providing product gas to the patient and purging bed 213. At the end of this phase, the entire cycle is repeated.

The oxygen-enriched air from the sieve beds passes through check valves 215 and 216 into the product storage (oxygen plenum 220). From oxygen plenum 220, the oxygen-enriched air passes into pressure regulator 231, through flow control orifice 232, HEPA filter 233 and check valve 234 to flow meter 235. Regulator 231 reduces the pressure from, for example, 30 psig in the oxygen storage plenum 220 to a constant pressure e.g. 6 psig, at the inlet of flow meter 235. Flow meter 235 is adjustable by the patient to provide the prescribed flow rate of oxygen at very low pressure.

A small amount of gas from the plenum e.g. typically less than 250 cc per minute, is continuously monitored by the oxygen sensor to ensure that the oxygen purity is above a predetermined value e.g. 90%. If the purity is below the predetermined or threshold value, a microprocessor energizes a warning light to alert the patient that an equipment malfunction has occurred and to

prevent cycling of the pressure intensifier.

Pressure intensifier 240 may be standard two-stage device with a drive air cylinder and first and second stage product gas cylinders. The intensifier is turned on by opening solenoid valve 244 and 245 and which are either both open or both closed. A typical pressure intensifier cycle is as follows:

1. In the first step of the cycle, drive air enters drive air cylinder 243 through solenoid valve 244 beginning at the start of the overlap cycle of the molecular sieve beds discussed above, which occurs just before bed 213 starts charging, and continuing through the bed 213 charging cycle. This causes the piston to shuttle, drawing product gas into first stage cylinder 241 through check valve 247 and compressing the oxygen-enriched air in the second stage cylinder 242 which exits through check valve 249.

2. The drive air cylinder supply is common to the sieve bed supply and controlled by the sieve bed solenoid valves. Thus, the air in drive air cylinder 243 also helps precharge the sieve beds during the overlap phase which further increases the efficiency of the system. In this step during the overlap phase, the air in the drive air cylinder 243 back flows through solenoid valve 244, backflows through solenoid valve 210 and back into bed 214 through solenoid valve 211.

3. When the bed solenoid valves cycle, ambient air enters drive air cylinder 243 through solenoid valve 245 causing the piston to shuttle compressing the oxygen enriched air in the first stage cylinder 241. This gas then passes through check valves 248 and 250 and enters the second stage cylinder. The drive air, entering through solenoid valve 245 in this side of the drive air cylinder 243 aids in precharging bed 213 during the overlap cycle, as previously described.

After leaving the pressure intensifier, the gas passes through a filter 260 and the high pressure

coupling 262 before entering a pressure vessel (not shown). The pressure intensifier will continue to operate until the pressure is high enough to activate a pressure switch 261 in the product line which signals the controller to close solenoid valves 244 and 245.

An example of apparatus for monitoring gaseous oxygen concentration is shown in U.S. Patent 5,402,665 of R.F. Hart et al, which issued April 4, 1995. An example of a pressure swing adsorber system having a pneumatically driven booster compressor is shown in U.S. Patent 5,354,361 of K.M. Coffield, which issued October 11, 1994.

In embodiments of the present invention, the first pressure is in the range of 5-10 psi and the second pressure is in the range of up to 3000 psi. The apparatus of the present invention is particularly adapted to be capable of providing both first and second pressures simultaneously.

The oxygen content of the oxygen-enriched air may be varied over a wide range but is preferably at least 85% by volume. In preferred embodiments, the oxygen content is at least 90% by volume, especially in the range of 92-94% by volume.

The oxygen concentrator described herein utilizes a pressure intensifier to raise the pressure of a portion of the oxygen-enriched air to a suitable pressure e.g. 2000 psig, for storage in pressure vessels e.g. a cylinder, for use by ambulatory patients. It will be understood that when the cylinder is empty, the pressure intensifier will provide oxygen-enriched air at a relatively low pressure, for instance, about the pressure in the storage plenum e.g. 30 psig, but that this pressure will rise as the cylinder fills e.g. to the aforementioned 2000 psig.

While the oxygen concentrator may be operated so as to produce oxygen-enriched air having a content of, for example, 93% oxygen, and thereby meet certain regulations

relating to the provision of oxygen-enriched air for patients, such oxygen-enriched air may not meet the specifications for a medical-grade oxygen. Thus cylinders with adaptors meeting regulations for medical-grade oxygen may not be able to be used with the oxygen concentrator. Nonetheless, a unique integrated high pressure fitting and flow controller is preferred, that allows the patient to easily and safely fill their cylinders with oxygen-enriched air e.g. 93% oxygen, from the concentrator. Such a high pressure fitting and flow controller is shown in Figures 3-11.

Figure 3 shows a perspective view of a fill port adaptor body, generally indicated by 300. Fill port adaptor body 300 has a housing 301 with integral cradle 302, handle 303, locking clip 304 and adaptor housing 305. Cradle 302 of housing 301 is adapted to accept the flow controller body described herein below. Cradle 302 has fill port adaptor 306 therein, which is further shown in Figure 5. Fill port adaptor 306 is connected to handle 303, and is movable into cradle 302 using handle 303. Adaptor 307 extends from housing 301 from the opposed side thereof to fill port adaptor 306, and is interconnected therewith as shown in Figure 5.

Locking clip 304 is intended to retain the flow controller body within cradle 302, as described below. Latching of the flow controller body into cradle 302 occurs automatically when the flow controller body of a cylinder is placed in the cradle. However, an operator must manually move locking clip 304 into a release position to remove the cylinder. Similarly, handle 303 must be moved before the flow controller body of a cylinder may be placed in cradle 302 or removed therefrom, to reduce risk of damage to fill port adaptor 306.

Adaptor housing 305 is open on its upper face, as illustrated, and has housing window 308 on the opposed side thereof. The end of adaptor housing 305 opposed to

cradle 302 has housing slot 309 therein.

Figure 4 is a plan view of fill port adaptor port 300. Handle 303 is located on housing 301, and is adjacent to cradle 302. Locking clip 304 is shown as extending into cradle 302. Cradle 302 has adaptor housing 305 extending therefrom and in an aligned relationship. Adaptor housing 305 has housing window 308 therein, with housing slot 309 in the end thereof. Figure 4 shows that adaptor 307 is connected to gear rack 401 which extends into housing 301.

Figure 5 shows a cross section of fill port adaptor body 300 through line A-A. Locking clip 304 is pivoted about locking clip pivot 501. Locking clip spring 504 located within housing 301 biases locking clip base 503 in an outwards direction so that locking clip lip 502 is biased into to cradle 302 to lock the flow controller body therein.

A fill port adaptor, generally indicated by 505 in Figure 5, is on the opposed side of cradle 302 to locking clip 304.

Fill port adaptor extends from adaptor 307 to adaptor pin 511. Adaptor 307 is connected to adaptor channel 506 which is located within adaptor channel housing 507 which in turn is located within adaptor housing 512. Gear rack 401, shown in Fig. 4 and Fig. 6 is machined into adaptor housing 512. As discussed herein, adaptor housing 512 is movable with respect to housing 301. Adaptor channel 506 connects with spring chamber 513 in which is located adaptor spring 508 and check valve base 509. Check valve base 509 extends through check valve seat 510 and terminates in adaptor pin 511. In the retracted position as shown in Fig. 5, adaptor pin 511 is within housing 301, but in the engaged position the adaptor pin extends into cradle 302.

Figure 6 shows a cross section of the adaptor body shown in Figure 4, through D-D. Handle 303 is located on housing 301. Shaft 605 extends downward from handle 303

and connects handle 303 to pinion 601; pinion 601 is more clearly seen in Figure 7, and is attached to shaft 605 by screw 604. Rotation of handle 303 causes rotation of pinion 601. Handle 303 has, on its lower side, handle projection 608, which is shown as being located in indent 609 in housing 301. Indent 609, and a similar indent that is not shown, serve to position and retain handle 303 in predetermined locations.

In a preferred embodiment, indent 609 has an adjustable screw therein (not shown), such screw being tapered or having a shoulder thereon. Projection 608 contacts the adjustable screw, on said taper or shoulder. Adjustment of the position of the screw adjusts the location of the taper or shoulder, and hence radially adjusts the position at which handle 303 is positioned and retained. This permits precise adjustment of the positioning of the fill port adaptor.

Figure 7 shows the rack and pinion, generally indicated by 600. Rack and pinion 600 has pinion 601 with pinion cogs 602. Pinion 601 rotates about pinion shaft 603, which extends down from handle 303, forming part thereof, as discussed above. Pinion 601 is located within pinion housing 606 which is part of housing 301. Pinion cogs 602 intermesh with ratchet slots 607 of ratchet 401. Ratchet 401 forms part of adaptor channel housing 507 illustrated in Figure 5.

Figure 8 illustrates the flow controller body, generally indicated by 700. Flow controller body 700 has pressure gauge 701, rupture disc housing 709, outlet fitting 706, and flow restrictor 704. Outlet fitting 706 is adapted to receive a flexible hose. The body is adapted to be threaded onto a high pressure cylinder by threaded port 705, flow restrictor 704 being located within threaded port 705. Flow controller body 700 has an integral cradle housing 702 which is shaped and dimensioned to fit precisely in the cradle 302 (see Figure 3). A flow control (ON/OFF) knob 703 with

mechanical alignment/interlock bar 708 is attached to flow controller body 700 at the end opposed to the threaded port 705. Fill port adaptor inlet 707 is located in integral cradle housing 702.

Figure 9 shows an end view of flow controller body 700. Flow controller body 700 has flow restrictor 704 in the end thereof. Pressure gauge 701 and outlet port 706 are shown at an angle.

Figure 10 shows a cross section of flow controller body 700 through line A-A of Figure 9. Adaptor inlet 707 has inlet valve 800. Inlet valve 800 has inlet valve stem 801 located within inlet valve chamber 802, but it will be noted that as illustrated inlet valve stem 801 does not extend fully to the end of inlet valve chamber 802. Inlet valve stem 801 has inlet valve spring 803 which biases valve end 804 towards valve seat 805 thereby biasing the valve toward a closed position.

In operation, flow controller body 700 is attached to a cylinder, not shown, through threaded cylinder port 705. Flow controller body 700 would normally be located on a cylinder, and remain thereon although it can be removed if desired. The cylinder with flow controller body 700 thereon is placed into fill port adaptor body 300 which forms part of the oxygen concentrator. Cradle housing 702 is adapted to fit within cradle 302 of fill port adaptor body 300. Alignment/interlock bar 708 on flow controller body 700 fits into housing slot 309 on adaptor housing 305. Flow controller knob 703 must be in the OFF position in order to insert alignment/interlock bar 708 into housing slot 309. This locates the rupture disk opposite housing window 308, but also locates inlet valve 800 opposite fill port adaptor 306. In order to insert flow controller body 700 into cradle 302, it is necessary to move locking clip 304 away from fill port adaptor 300, but after flow controller body 700 has been inserted into cradle 302, locking clip 304 biases back and locks flow controller body 700 in position.

Handle 303 is then tilted, rotated and locked in position, with handle projection 608 of handle 303 engaging in indent 609 in housing 301, at which time adaptor 306 moves inwards into cradle 302. In doing so, fill port adaptor 306 is inserted into adaptor inlet 707, with adaptor pin 511 contacting valve end 804. This moves valve end 804 away from valve seat 805, thereby opening the valve. However the amount of movement of valve end 804 is limited, thereby also causing check valve 509 to open. This forms a channel for the flow of oxygen-enriched air from the oxygen concentrator through fill port adaptor body 300, flow controller body 700, and out of cylinder port 704 into the cylinder. The cylinder cannot be removed without moving handle 303 such that fill port adaptor 306 becomes retracted. This disconnects the fill port adaptor so that the oxygen concentrator is not connected to the cylinder, and closes both the cylinder and the oxygen concentrator check valves 804 and 509, to prevent the flow or leakage of gas therefrom. In particular, the check valve in the fill port adaptor, 509, prevents gas from oxygen plenum 220 from escaping to atmosphere through check valves 247-250 in the pressure intensifier when the pressure intensifier is not in operation. A single movement of handle 303 opens or closes the channels for flow of high pressure air to the cylinder.

It will be appreciated that the flow controller body permits the use of cylinders of various sizes to be filled using the concentrator described herein.

It is to be understood that the oxygen concentrator described herein may be operated in a mode in which oxygen-enriched air is only supplied to a patient. Alternatively, the oxygen concentrator may be operated in a mode in which oxygen-enriched air is only supplied for the re-charging or filling of a cylinder. However, the oxygen concentrator also may be operated in a dual mode, supplying oxygen-enriched air to a patient and

simultaneously supplying oxygen-enriched air for re-charging or filling of a cylinder.

Figure 11A shows a compressor system, generally indicated by 820. Compressor system 820 has compressor 821 mounted on base 822. Base 822 also has an integral sound suppressor 823 for suppressing noise from both air drawn into the compressor and air exhausted from the concentrator. The integral sound suppressor assists in reducing the size and complexity of the compressor system and permits the suppressors to be mounted in the base, thus reducing the manufacturing steps required in the fabrication of the oxygen concentrator. Sound suppressor 823 is more clearly shown in cross-section, through B-B, in Figure 11B.

Figure 11B illustrates air compressor sound suppressor, generally indicated by 900. Sound suppressor 900 has compressor base 901 into which two outer silencer tubes 902 and 903 have been moulded, utilizing the natural contour of the air compressor. End caps 904 and 905 along with inner silencer tubes 906 and 907 are attached to each end of the compressor base silencer tubes 902 and 903. Compressor port 910 is adapted to be connected to an air compressor.

Operation of the sound suppressor can be described as follows:

As air is drawn into an air compressor, valve noise and air noise is generated. In more general terms, noise is generated when compressed air is exhausted to atmosphere in any pneumatic device.

In air compressor sound suppressor 900, compressor port 910 is connected to an air compressor and air is drawn into silencer tube chamber 908, which is moulded into the compressor base 901, via inlet port 911 in the end cap 904. The air travels through inner silencer tube 906 and into the inlet silencer chamber 908. Noise coming from the air compressor is muffled, because as sound travels from the air compressor and into compressor

port 910, the noise is absorbed and deflected through outlet silencer chamber 909 by the outer silencer tube 902 and the inner silencer tube 906 before exiting through outlet 911. By varying the diameter and length of outer silencer tube 902 and inner silencer tub 906, sound compressor 900 can be tuned to minimize the unwanted noise from the compressor.

The concentrator exhaust silencer operates in a similar manner as the inlet silencer except exhaust air noise is minimized. Air enters the silencer tube 903 through exhaust inlet 913 in end cap 905. Noise coming from the exhaust air is muffled, because as air travels through inlet exhaust inlet 913, the exhaust air noise is absorbed and deflected by the inner silencer tube 907 and outer silencer tube 903 before exiting through outlet 912. By varying the diameter and length of the outer silencer tube 903 and inner silencer tube 907, sound suppressor 900 can be tuned to minimize the unwanted exhaust air noise.

It is understood that the air compressor may be mechanically or an electrically driven compressor, or any other mechanism that compresses air for introduction into the oxygen enrichment portion of the apparatus.

The apparatus described herein may be used to fill cylinders of a variety of different sizes and configurations by providing suitable adaptors to the oxygen fill port adaptor, including use of adaptors to fill stationary cylinder which would not otherwise fit into the fill port. For example, a flow controller body may be adapted to fit in the fill port adaptor 300 and to be connected via a high pressure hose to a flow controller body 700 on a cylinder which is not, itself, contained with the fill port adaptor. The substitute flow controller body may be used to otherwise mimic the functions of a flow controller body when installed in the fill port adaptor to permit gas from the oxygen concentrator to be used to replenish a large (for

example, stationary) cylinder which would not otherwise fit within the fill port adaptor body 300. Lastly, it is to be noted that outlet port 706 may be used to connect via tubing (not shown) the cylinder to which the flow controller body is attached to the patient so that a patient may breathe oxygen enriched air contained in the cylinder by adjusting the flow rate of oxygen enriched air by means of the flow control knob 703. Pressure gauge 701 may be used by the patient to monitor the gas remaining in the cylinder.

In the claims which follow and in the preceding summary of the invention, except where the context requires otherwise due to express language or necessary implication, the word "comprising" is used in the sense of "including", i.e. the features specified may be associated with further features in various embodiments of the invention and are not to be construed, necessarily, as the only features of the invention.

CLAIMS:

1. A method for providing oxygen-enriched air at a first pressure and at a second pressure, the second pressure being greater than the first pressure, the method including:

feeding air to an air separation system;

simultaneously providing oxygen-enriched air from the air separation system to a first outlet at the first pressure and to a second outlet connected to a pressure intensifier at approximately the first pressure;

increasing the pressure of the oxygen-enriched air provided by the pressure intensifier to the second pressure;

wherein the air separation system is capable of simultaneously providing oxygen-enriched air to the first outlet and the second outlet such that a flow of oxygen-enriched air can be supplied continuously to the first outlet while said pressure intensifier is pressurizing the oxygen-enriched air to the second pressure.

2. A method as claimed in claim 1 in which the oxygen-enriched air has an oxygen content of at least 90% by volume.

3. A method as claimed in claim 1 or claim 2 wherein the air separation system is an oxygen generator.

4. A method as claimed in claim 3 wherein the oxygen generator is a pressure swing adsorption system.

5. A method as claimed in any one of the preceding claims wherein the first outlet supplies a patient with oxygen-enriched air.

6. A method as claimed in any one of the preceding claims wherein the oxygen-enriched air provided by the air separation system is product gas.

7. A method as claimed in claim 6 further including storing product gas in a storage tank and providing oxygen-enriched air to the first outlet and the second outlet from the storage tank.

8. A method for providing oxygen-enriched air at a first pressure and at a second pressure, the second pressure being greater than the first pressure, the method being

AUSTRALIAN PATENT OFFICE

substantially as herein described with reference to the accompanying drawings.

9. An apparatus for providing oxygen-enriched air including:

a low pressure oxygen-enriched air separation system for enriching the oxygen content of inlet air, the air separation system adapted to simultaneously provide oxygen-enriched air to a first outlet at a first pressure and adapted to simultaneously provide oxygen-enriched air to a second outlet at approximately the first pressure; and

a pressure intensifier connected to the second outlet to pressurize said oxygen-enriched air and to provide oxygen-enriched air to a high pressure cylinder at a second pressure;

wherein the air separation system is capable of simultaneously providing oxygen-enriched air to the first outlet continuously and the second outlet such that a flow of oxygen-enriched air can be supplied continuously to the first outlet while the pressure intensifier is pressurizing oxygen-enriched air to the second pressure.

10. An apparatus as claimed in claim 9 further including a compressor adapted to provide compressed air to the air separation system.

11. An apparatus as claimed in claim 9 or claim 10 further including a sound suppression system to suppress inlet noise to the compressor and exhaust noise from the air separation system.

12. An apparatus as claimed in claim 11 in which the sound suppression system is located in a base of the compressor, the sound suppression system including inlet and exhaust air silencer tubes integrally incorporated into the base, the tubes being tuned to minimize noise associated with intake air into the compressor and exhaustion of air from the air separation system.

13. An apparatus as claimed in claim 12 in which the tubes have a variable length and a variable diameter, the tubes being tuned to suppress noise by varying the diameter and length of the tubes.

AUSTRALIAN PATENT OFFICE

14. An apparatus as claimed in any one of claims 9-13 further including a compressor adapted to provide compressed air to the pressure intensifier.

15. An apparatus as claimed in any one of claims 9-14 in which the first pressure is provided to a flow meter and is suitable for patient respiration.

16. An apparatus as claimed in any one of claims 9-15 in which the first pressure is up to about 10 psi and the second pressure is up to about 3000 psi.

17. An apparatus as claimed in any one of claims 9-16 wherein the first outlet is adapted to accept an ambulatory pressure vessel using a securing mechanism.

18. An apparatus as claimed in any one of claims 9-17 further including an oxygen concentration monitoring system to prevent cycling of the pressure intensifier if the oxygen concentration of the oxygen-enriched air falls below a predetermined value.

19. An apparatus as claimed in any one of claims 9-18 in which the flow rate of the oxygen-enriched air to the first outlet may be adjusted independent of the pressure intensifier.

20. An apparatus as claimed in any one of claims 9-19 further including a rupture disc in the pressure intensifier to prevent the pressure exceeding a predetermined value.

21. An apparatus as claimed in any one of claims 9-20 wherein the low pressure oxygen-enriched air separation system is an oxygen generator.

22. An apparatus as claimed in claim 21 wherein the oxygen generator is a pressure swing adsorption system.

23. An apparatus as claimed in any one of claims 9-22 wherein the pressure intensifier includes a first stage cylinder, a second stage cylinder and a drive air cylinder located therebetween.

24. An apparatus as claimed in any one of claims 9-23 wherein the first outlet supplies a patient with oxygen-enriched air.

25. An apparatus as claimed in any one of claims 9-

AUSTRALIAN PATENT OFFICE

24 wherein the oxygen-enriched air provided by the air separation system is product gas.

26. An apparatus as claimed in any one of claims 9-25 further including a storage tank located between the air separation system and the first outlet and the second outlet.

27. An apparatus for providing oxygen-enriched air including:

an air compressor, a low pressure oxygen-enriched air separation system and a pressure intensifier;

the air compressor being adapted to provide compressed air to the oxygen-enriched air separation system;

the oxygen-enriched air separation system being adapted to simultaneously provide oxygen-enriched air to a first outlet at a first pressure and to the pressure intensifier at the first pressure, the pressure intensifier being adapted to provide oxygen-enriched air at a second pressure;

the first outlet having a controller to control the flow of oxygen-enriched air at the first outlet;

wherein the air separation system is capable of simultaneously providing oxygen-enriched air to the first outlet and the second outlet such that a flow of oxygen-enriched air can be supplied continuously to the first outlet while the pressure intensifier is pressurizing oxygen-enriched air to the second pressure.

28. An apparatus as claimed in claim 27 in which the compressor is adapted to provide compressed air to the pressure intensifier.

29. An apparatus as claimed in claim 27 or claim 28 in which the first pressure is provided to a flow meter and is suitable for patient respiration and the second pressure is suitable for filling high pressure cylinders or storage plenums.

30. An apparatus as claimed in any one of claims 27-29 in which the first pressure is up to about 10 psi and the second pressure is up to about 3000 psi.

31. An apparatus as claimed in any one of claims 27-30 adapted to accept an ambulatory pressure vessel to the second outlet using a securing mechanism.

AUSTRALIAN PATENT OFFICE

32. An apparatus as claimed in claim 31 further including an ON/OFF flow controller adapted to prevent flow of oxygen-enriched air through the second outlet when the second outlet is disconnected from the ambulatory pressure vessel.

33. An apparatus as claimed in any one of claims 27-32 further including an oxygen concentration monitoring system to prevent cycling of the pressure intensifier if the oxygen concentration of the oxygen-enriched air falls below a predetermined value.

34. An apparatus as claimed in any one of claims 27-33 in which the flow rate of the oxygen-enriched air to the first outlet may be adjusted independent of the pressure intensifier.

35. An apparatus as claimed in any one of claims 27-34 further including a rupture disc in the pressure intensifier to prevent the pressure exceeding a predetermined valued.

36. An apparatus as claimed in any one of claims 27-35 further including a sound suppression system to suppress inlet noise to the air compressor and exhaust noise from the air separation system.

37. An apparatus as claimed in any one of claims 27-35 further including a sound suppression system located in a base of the compressor, the sound suppression system including inlet and exhaust air silencer tubes integrally incorporated into the base, the tubes being tuned to minimize noise associated with intake of air into the compressor and exhaustion of air from the air separation system.

38. An apparatus as claimed in claim 37 in which the tubes have a variable length and a variable diameter, the tubes being tuned to suppress noise by varying the diameter and length of the tubes.

39. An apparatus as claimed in any one of claims 27-38 wherein the low pressure oxygen-enriched air separation system is an oxygen generator.

40. An apparatus as claimed in claim 39 wherein the oxygen generator is a pressure swing adsorption system.

41. An apparatus as claimed in any one of claims 27-

AUSTRALIAN PATENT OFFICE

40 wherein the pressure intensifier includes a first stage cylinder, a second stage cylinder and a drive air cylinder located therebetween.

42. An apparatus as claimed in any one of claims 27-41 wherein the first outlet supplies a patient with oxygen-enriched air.

43. An apparatus as claimed in any one of claims 27-42 wherein the oxygen-enriched air provided by the air separation system is product gas.

44. An apparatus as claimed in any one of claims 27-43 further including a storage tank located between the air separation system and the first outlet and the second outlet.

45. An apparatus for providing oxygen-enriched air, the apparatus being substantially as herein described with reference to the accompanying drawings.

DATED this 30th day of March 2000

LITTON SYSTEMS INC.
By its Patent Attorneys
GRIFFITH HACK

AUSTRALIAN PATENT OFFICE

72963/88

FIG. 1

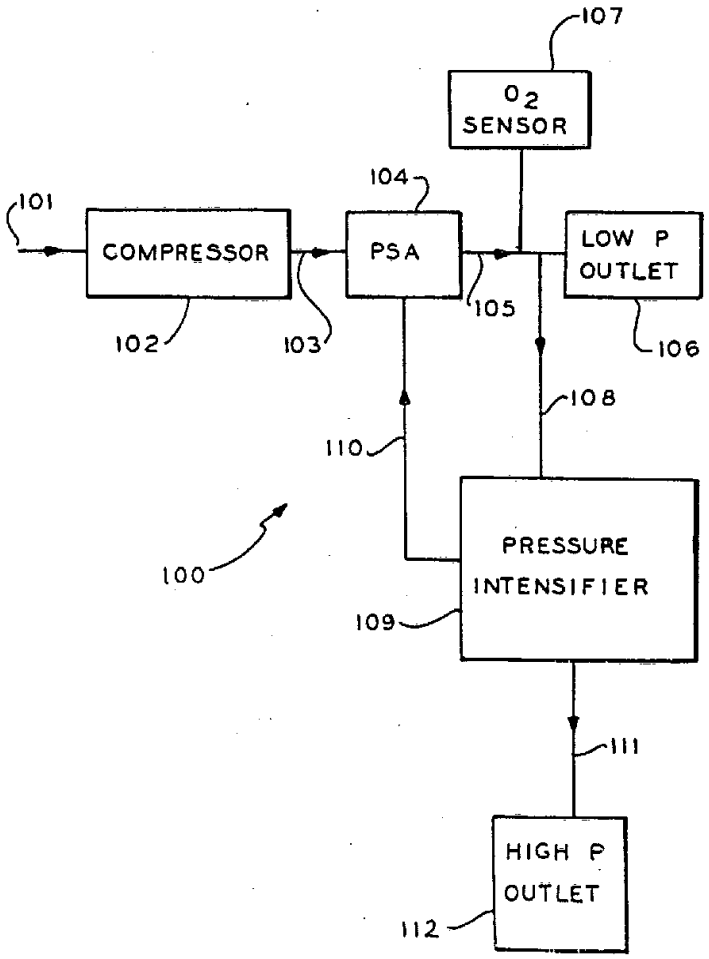

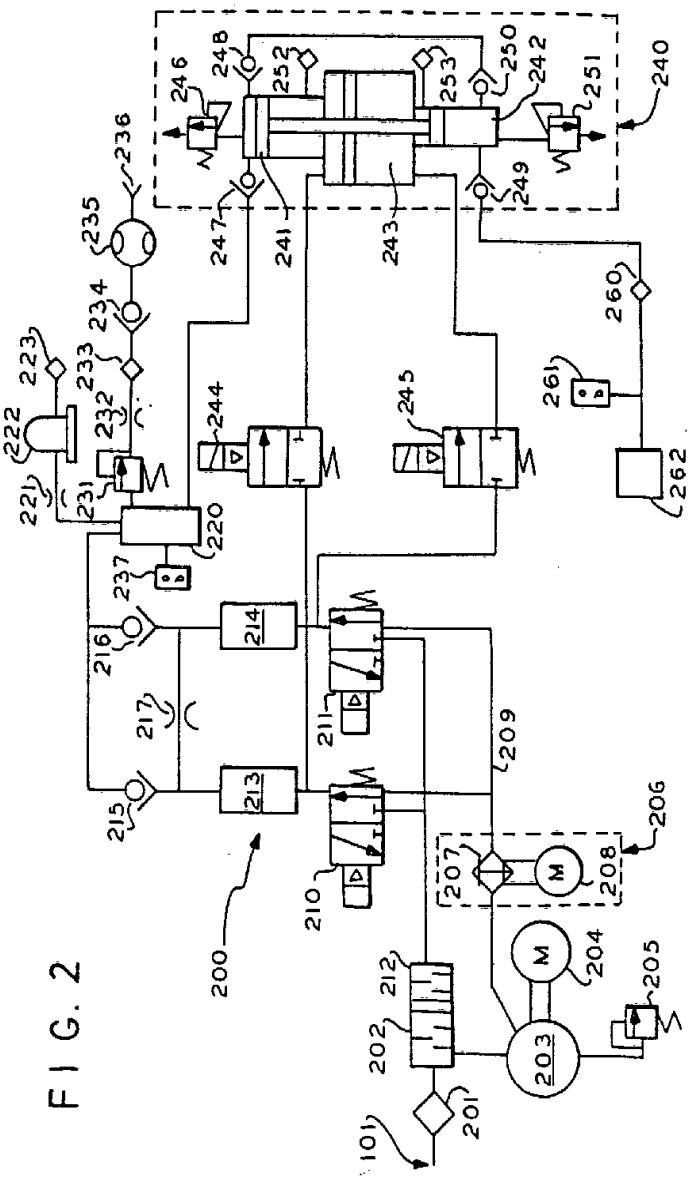
200
201
202
203
204
205
206
207
208
209
210
211
212
213
214
215
216
217
220
221
222
223
231
232
233
234
235
236
237
240
241
242
243
244
245
246
247
248
249
250
251
252
253
260
261
262
101

FIG. 2

FIG. 3

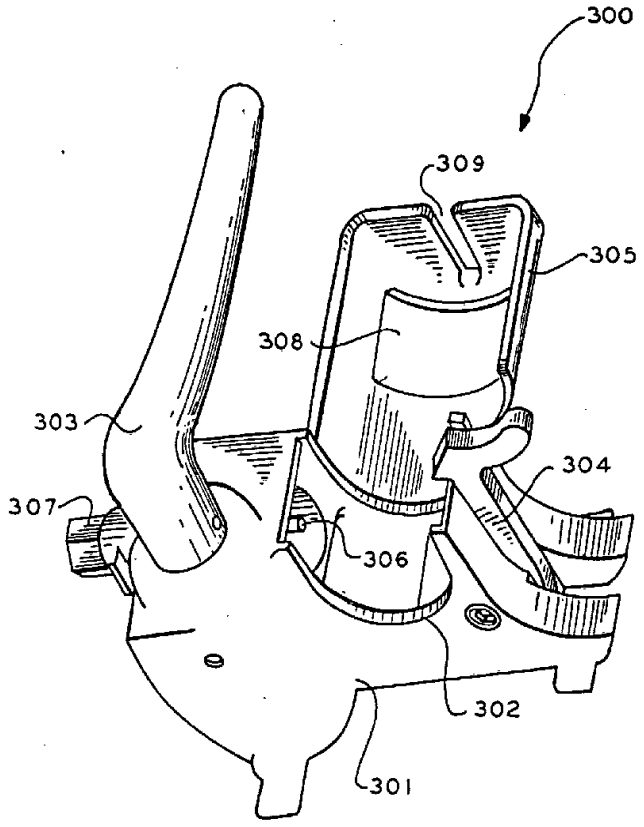

FIG. 4

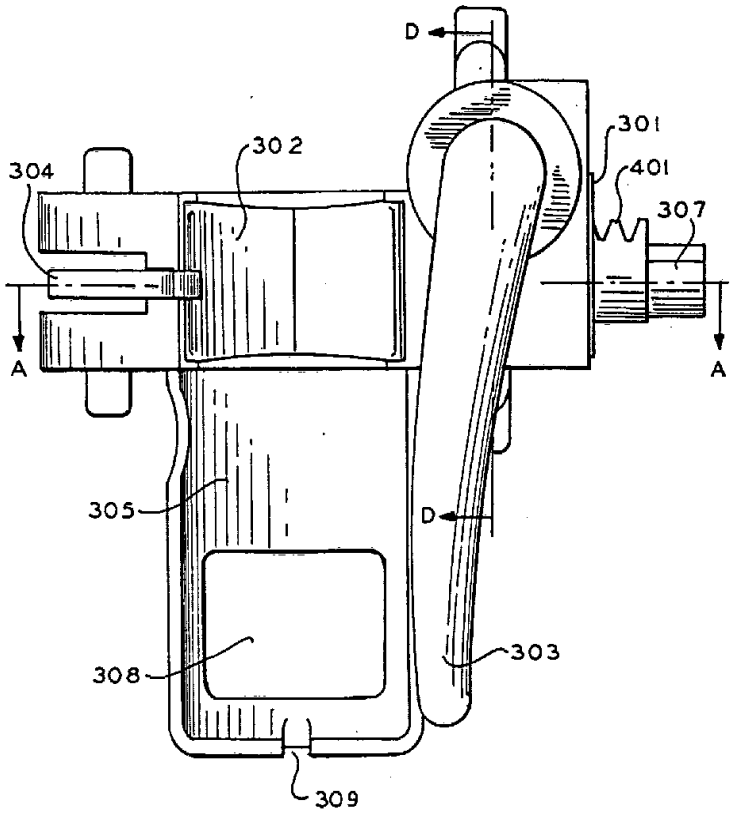

FIG. 5

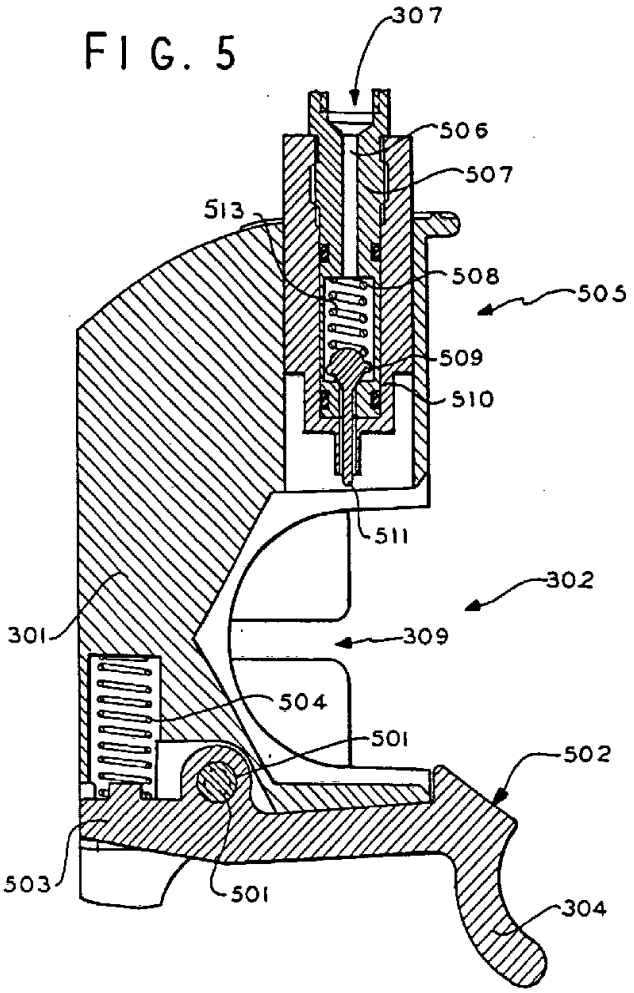
307
506
507
513
508
505
509
510
511
302
301
309
504
501
502
503
501
304

FIG. 6

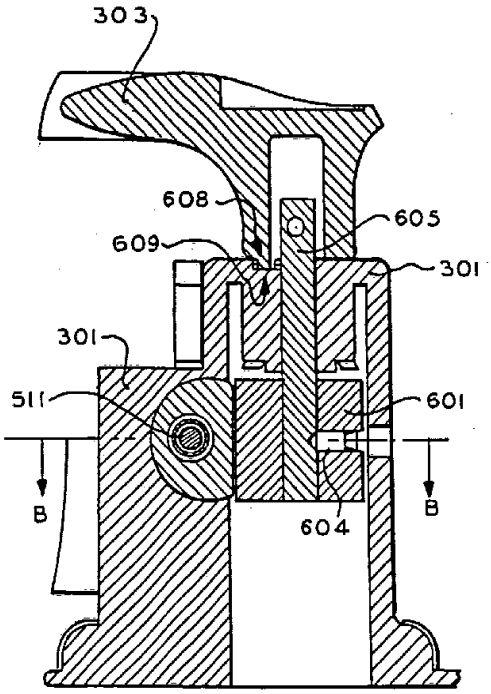

FIG. 7

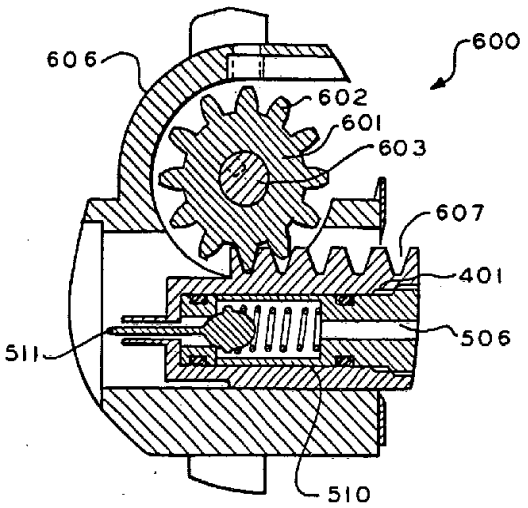

FIG. 8

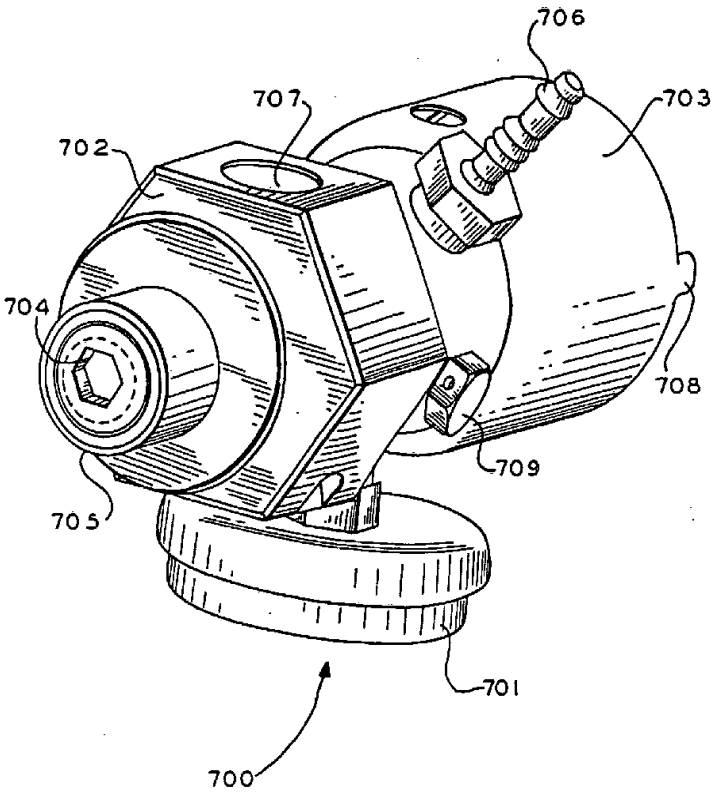

FIG. 9

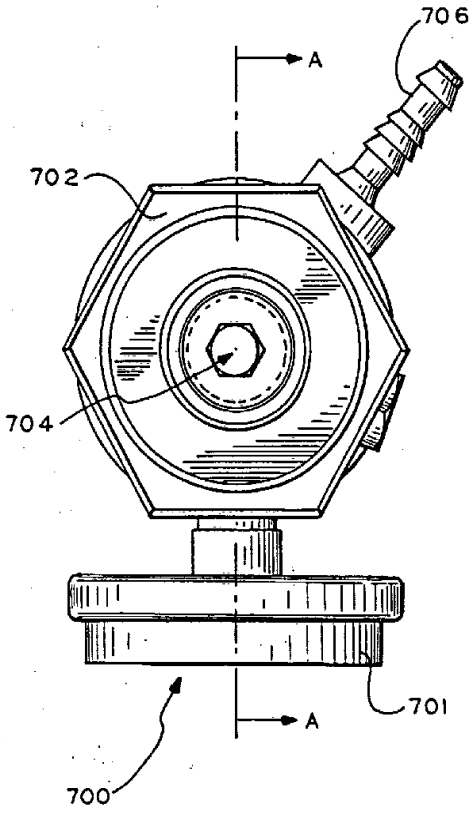

FIG. 10

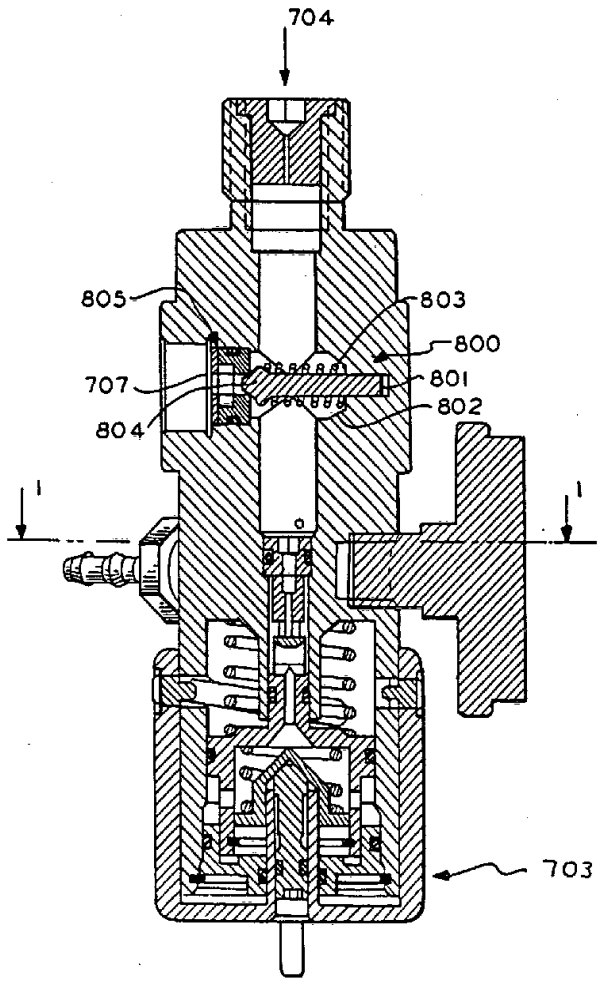

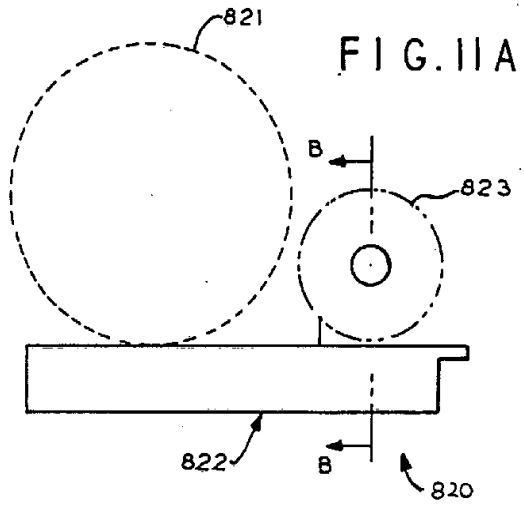

FIG. 11A

FIG. 11B

