June 10, 1924. 1,497,482

H. BURG

TRANSPORTABLE TYPEWRITER

Filed May 6, 1922 3 Sheets-Sheet 1

Fig. 1

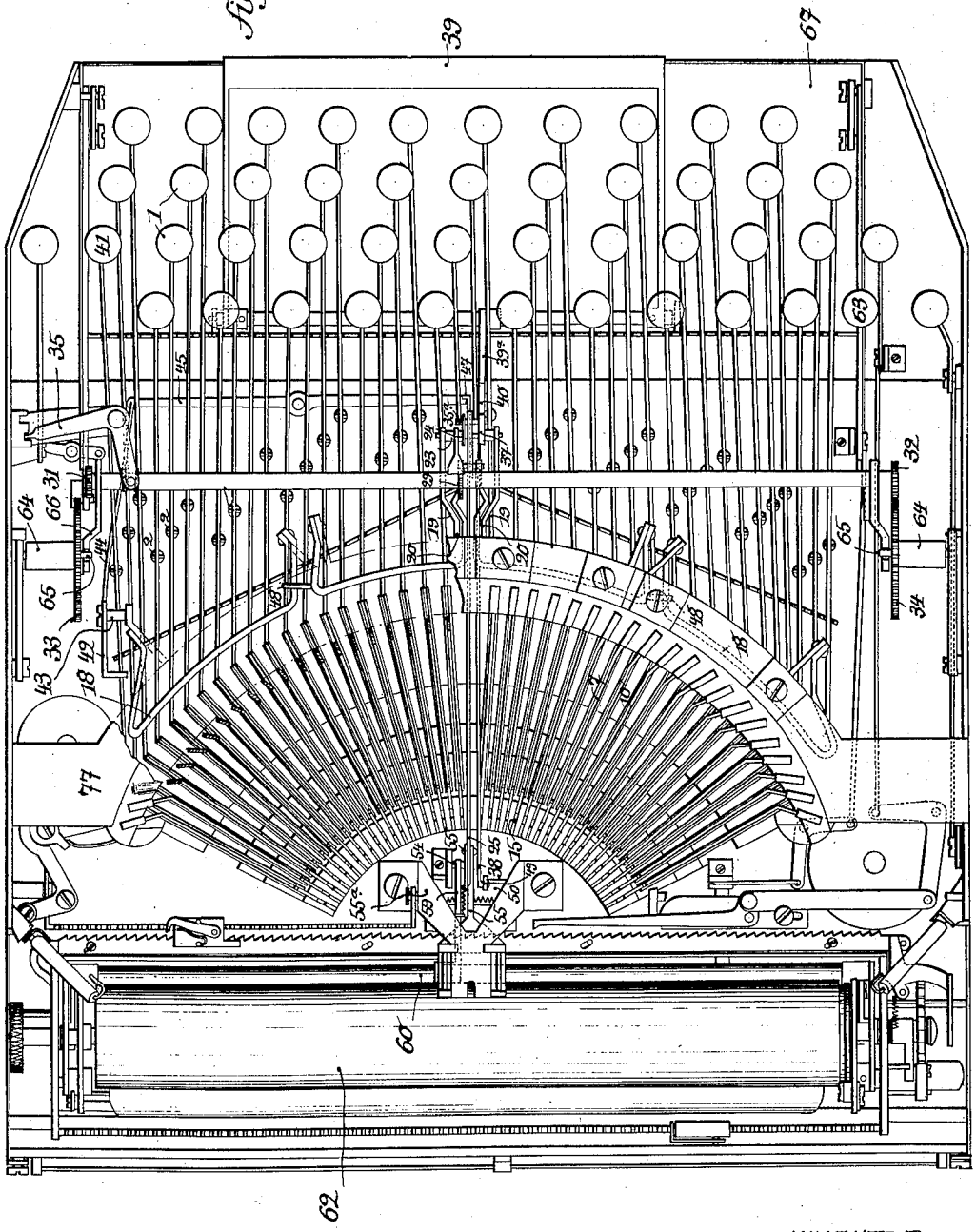

INVENTOR
Hubert Burg
BY Munn & Co.
ATTORNEYS

June 10, 1924. 1,497,482

H. BURG

TRANSPORTABLE TYPEWRITER

Filed May 6, 1922 3 Sheets-Sheet 2

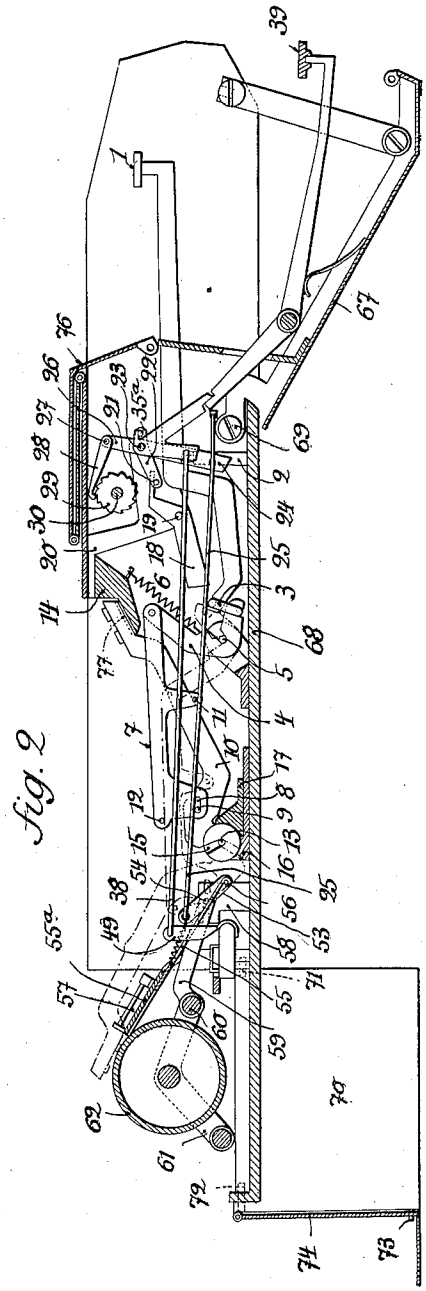

Fig. 2

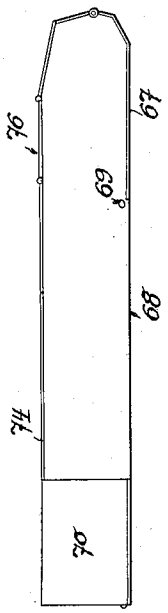

Fig. 7

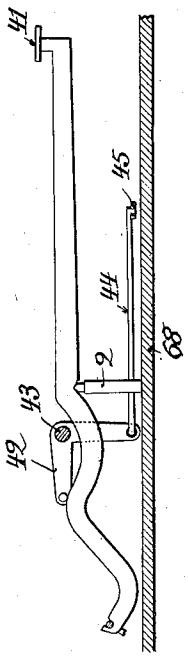

Fig. 4

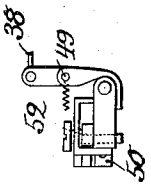

Fig. 5

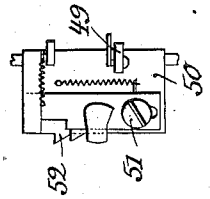

Fig. 6

INVENTOR
Hubert Burg
BY Munn & Co.
ATTORNEYS

June 10, 1924. 1,497,482

H. BURG

TRANSPORTABLE TYPEWRITER

Filed May 6, 1922 3 Sheets-Sheet 3

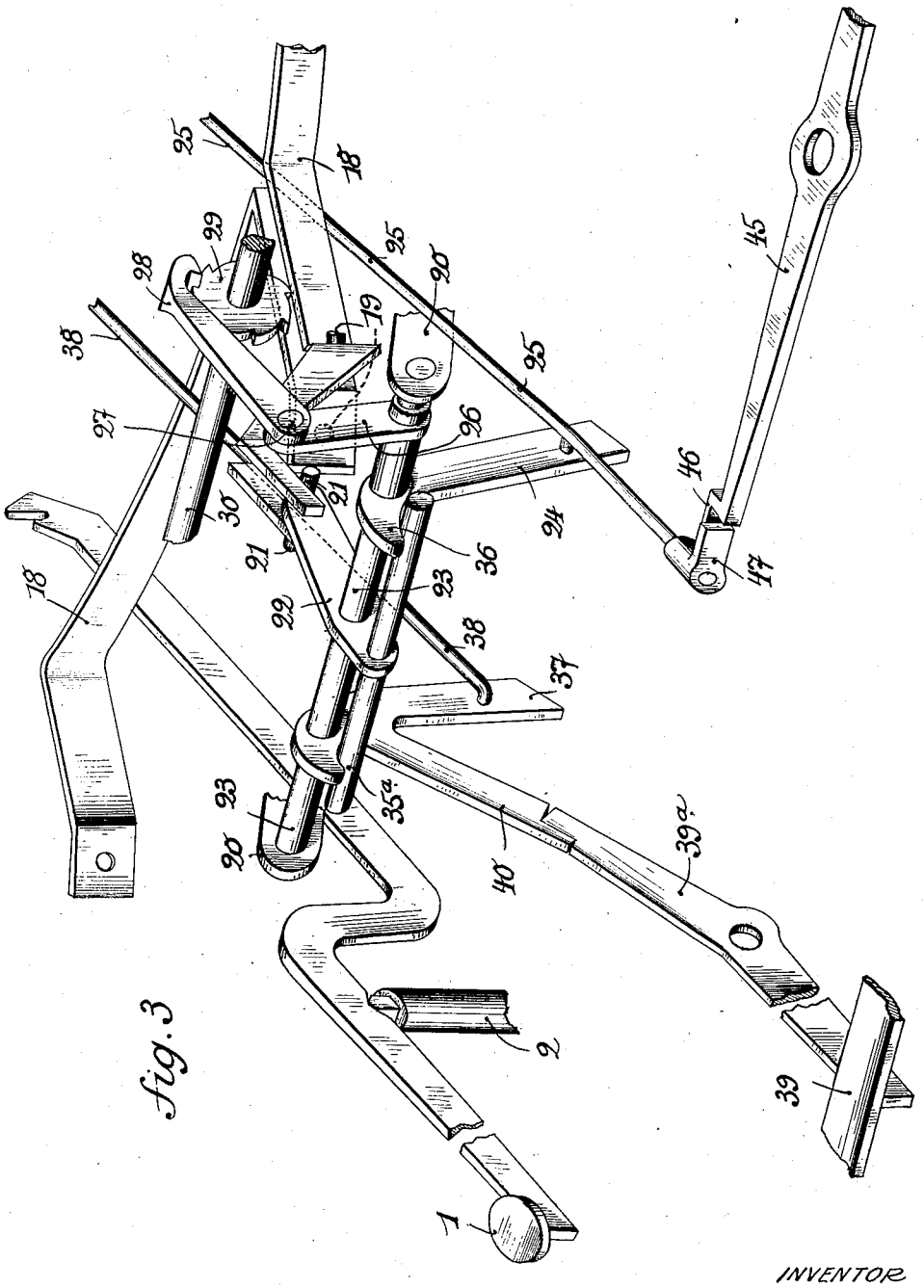

Fig. 3

INVENTOR
Hubert Burg
BY Munn & Co.
ATTORNEYS

Patented June 10, 1924. 1,497,482

UNITED STATES PATENT OFFICE.

HUBERT BURG, OF MOLLKIRCH, FRANCE.

TRANSPORTABLE TYPEWRITER.

Application filed May 6, 1922. Serial No. 558,905.

To all whom it may concern:

Be it known that I, HUBERT BURG, a citizen of the Republic of France and residing at Mollkirch, Bas-Rhin Department, in the Republic of France, have invented certain new and useful Transportable Typewriters, of which the following is a specification.

This invention relates to a transportable typewriting machine. Apparatus of this class should have their height reduced as far as possible, thus giving rise to special arrangements of operating mechanism, inasmuch as the latter is required to be situated at the same height as the key levers.

According to my invention, the key levers situated at the middle part of the machine have sufficient spacing for the passage of the elements connecting the actuating elements with the releasing elements, and furthermore, the type levers are so disposed as to occupy an approximately horizontal position upon their contact member when in the inoperative position.

In this case the angle described by the said levers is relatively considerable, thereby causing difficulties in actuating the type levers if the type is to strike in the proper manner without requiring any more effort upon the keys than in the improved typewriters of the known class. In the present machine this drawback is obviated by the use of a special arrangement of the operating mechanism whereby each type lever is acted upon at a point situated at some distance from its pivoting point at the beginning of each movement, both during the return stroke and the operating stroke.

The machine according to this invention possesses further particular features of an advantageous nature which will be described hereunder.

The following description, together with the accompanying drawings which are given by way of example, sets forth an embodiment of my invention.

Fig. 1 is a plan view of the machine with various accessory elements removed or broken away.

Fig. 2 is a horizontal section.

Fig. 3 is a perspective view of the details of various actuating devices.

Fig. 4 is an elevational view of the actuating devices for the spaces.

Figs. 5 and 6 are sectional and plan views of the actuating devices for the carriage.

Fig. 7 is an elevational view of the machine in the closed position, on a smaller scale than the preceding figures.

Each typewriting key 1 is pivoted to a support 2, and the outer end thereof is connected by a link 3 with a bent lever 4. The latter is adapted to swing upon an axle 5 and is brought back by the spring 6, the upper end of the lever being pivoted to an arm 7 having a slot 8 wherein is engaged a pin 9 secured to the type lever 10. The arm 7 is provided with the pins 11, 12 alternately engaging the lever 10 which is pivoted to the axle 13. When the key 1 is pressed, the lever 4 is caused to move, and the arm 7 is brought forward as well as raised. The slot 8 slides upon the pin 9, and the pin 11 drives forward the lever 10, acting thereupon at a point situated at some distance from its pivoting axis 13, which condition favours the easy working of the keys; the lever 10 is thus moved forward into the position shewn in the dotted lines.

When near the end of this movement, the arm 7 acts upon the pin 9 in order to print with the type with all the pressure resulting from the vis viva acquired during the motion. Upon releasing the key 1, the spring 6 will act, and the pin 12 brings back the lever 10 to the first position upon the supporting plate 14. The said pin acts upon the lever 10 at a point which is also at a certain distance from its pivoting point, and in this manner the force of the spring 6 can be correspondingly reduced.

To facilitate mounting and dismounting, the lever 10 ends in a hook of circular shape 15 engaging the axle 13, and the said hook is held against a guide 16 by a wedge 17 which is secured in a removable manner. The cut-out part of the hook is so disposed that when the wedge 17 is removed and the lever 10 moved down in the forward position, the said lever can be readily disengaged from the axle 13. When the key 1 is pressed it raises a U-shaped lever 18 which is pivoted by the trunnions 19 to the supports 20 secured to the plate 14. The

said lever acts upon a pin 21 carried by a lever 22 which is adapted to swing upon an axle 23. To the same shaft is pivoted an arm 24 connected by a rod 25 with the device for raising the ribbon and secured to the arm 26 which is pivoted by the axle 27 to a pawl 28.

The said pawl engages a ratchet wheel 29 mounted on the shaft 30 carrying the gears 31, 32 which cooperate in an alternate manner with the gears 33, 34 mounted on the ribbon reels. To this effect, the shaft 30 may be moved in the lengthwise sense as desired, by means of a lever 35, so as to engage one of the gears 33 or 34. This affords the winding and unwinding of the ribbon in either sense. The lever 22 carries a transverse rod 35^a actuating the arm 24 by acting upon the extension 36 of the said arm; at the same time the said rod is caused to act upon a lever 37 connected by a rod 38 with the ratchet drive of the carriage.

In this manner when a key 1 is pressed it affords at the same time the printing with the type, and the lifting of the ribbon, and it prepares for the forward motion of the ribbon and for the forward motion of the carriage, this motion taking place when the key is again raised. For the spacing effect, a bar 39 connected with a swinging lever 39^a provides for an upward action upon an arm 40 secured to the lever 37. The movement of the said lever has no action upon the transverse rod 35^a, and for this reason the rod 38 controlling the carriage will be alone actuated.

To produce the signs, accents and the like, the operator makes use of a special key 41 at the side of the machine which is so disposed as to move outside of the levers 18, for it is necessary that the carriage should remain in position, and only the ribbon is to be moved. The key 41 raises a bent lever 42 pivoted to the axle 43 and secured to a rod 44 which actuates a lever 45; the latter ends in a finger 46 which acts upon an arm 47 secured to the rod 25. In this movement, the extension 36 is separated from the transverse rod 35^a by rotating on the axle 23, and the arm 26 and pawl 28 are thereby moved whilst the levers 22 and 37 are inactive.

To facilitate the construction and to provide for the proper working of the apparatus; a sufficient number of levers 18, four for example, are mounted along the plate 14, and the said levers are caused to cooperate by means of the fingers 48 in order to actuate the above-described mechanism which is disposed in the middle of the width of the machine. The rod 38 is enabled to move (by means of a spring-actuated bent lever 49) the device for ratchet motion or for holding in position which is used for the intermittent movement of the carriage. This device, of a known type, comprises the members 50, 51, 52; it engages by means of the tooth 52 with the rack of the carriage.

On the other hand, the alternate vertical motion of the ribbon is effected as follows: When the rod 25 is drawn upon, a lever 53 moves upon its axle 54 and a slide 55, which travels upon a fixed support 55^a and is connected with the lever 53 by an axle 56, is driven forward. The slide 55 carries the ribbon 57, and the latter is thus brought into the striking position upon pressing any one of the keys, and is then brought to the rear so as to uncover the printing when the rod 25 moves backward.

For printing in capital letters by the use of a second set of characters disposed upon the members 10, the axle 54 is engaged in a holder 58 wherein it is maintained by a link 59 mounted on an axle 60 which is secured to a bent lever 61 carrying the roller 62, so that pressing a key 63 will cause at the same time the movement of the said roller and that of the axle 54, and therefore the movement of the ribbon holder. It is understood that this additional displacement of the ribbon holder is independent of its alternate motion as controlled by the rod 25.

The reels 64 are disposed upon the trunnions 65 carried by the arms 66. The reels are put in place by raising the arms 66 and then allowing them to fall.

In order to reduce the space occupied by the machine and to render it more easily transportable, the portion 67 of the table 68 mounted below the keyboard is pivoted to an axle 69 and serves as a support during the operation of the device, while providing for the free movement of the keys. At the sides, the flaps 70 which are pivoted to the axles 71, 72, can be folded down vertically at the exterior and are provided with the studs 73 engaging a like flap 74 adapted to fold down at the rear of the machine.

The flaps 70 thus constitute supports for suitably raising the base plate of the machine 68, and if necessary they can be reinforced by ribs of adequate form: The flap 74 is bent at an angle, as shown, in order to serve as a cover when in the closed position, and thus to cover a part of the machine, Fig. 7. The closing is completed by a hinged flap 76 which is folded as desired, Fig. 2.

In order that the type when in the inoperative position shall be properly held against the bearing plate 14 and that the type bars shall incur no risk of bending while being cleaned and even under the effect of an energetic rubbing action, the facing of the said plate in soft material such as cloth, felt or the like, comprises the grooves 77 wherein the type bars are caused

to engage with the least possible play. Should one of the bars be bent out of shape for any reason, this fact will be shown at once, inasmuch as the type will be unable to return into the recess and will form a noticeable projection upon the remainder of the row of type which are correctly disposed in place.

Claims:

1. In a portable typewriting machine, typeholding levers adapted to describe a considerable angle of oscillation, key levers, means for connecting said type-holding levers to said key levers, a hook of external cylindrical shape formed upon each typeholding lever and at the end opposite the type, a stationary axle upon which the said hook is engaged, a stationary guide with cylindrical concave surface against which the said hook is maintained, a movable wedge with cylindrical concave surface adapted to maintain the said hook upon said axle and against the said guide, the hook being so disposed that upon removing the wedge and bringing down the said typeholding lever in the forward direction, the said lever can be disengaged from said axle.

2. In a transportable typewriter, type levers, key levers, transverse bars disposed above the key levers, the said bars being adapted to be raised when one of the key levers is pressed, lever arms secured to the said bars, fixed axles having the said lever arms pivoted thereto, extensions formed upon two of the said lever arms and extending outwardly of the fixed axles, a revoluble transverse shaft of short length, a lever with two arms mounted upon the said shaft, stop-pieces being struck and driven downwardly by the said extensions of the lever arms secured to the bars, a transverse rod mounted upon the other arm of the said lever, an arm disposed upon the short shaft, a cam mounted upon the said shaft, the said cam being adapted to be raised by the said transverse rod at each movement of one of the key levers, a device for raising the ribbon, and means for connecting the said arm with the said ribbon-raising device.

3. In a transportable typewriter, type levers, key levers, transverse bars disposed above the key levers, the said bars being adapted to be raised when one of the key levers is pressed, lever arms secured to the said bars, fixed axles having the said lever arms pivoted thereto, extensions formed upon two of the said lever arms and extending outwardly of the fixed axles, a revoluble transverse shaft of short length, a lever with two arms mounted upon the said shaft, stop-pieces provided upon one of the arms of the said lever, the said stop-pieces being struck and driven downwardly by the said extensions of the lever arms secured to the bars, a transverse rod mounted upon the other arm of the said lever, a spacing bar, a lever carrying the said bar, a bent lever mounted upon the said short shaft, one arm of the said lever being adapted to be actuated by the said spacing bar when the latter is pressed, means for ratchet operation of the carriage, the said means being connected with the other arm of the bent lever, and a cam mounted upon the said short shaft, the said cam being adapted to be raised by the said transverse rod at each movement of one of the key levers.

4. In a transportable typewriter, type levers, key levers, transverse bars disposed above the key levers, the said bars being adapted to be raised when one of the key levers is pressed, swinging lever arms secured to the said bars, means for raising the ribbon, means for winding the ribbon, means for connecting the said bars with the said ribbon-raising and ribbon-winding means, a type lever for printing the signs and accents, a key lever for actuating the said type lever, the said key lever being disposed outwardly of the said transverse bars, a bent lever adapted to be raised by the said accent-printing key lever, a fixed horizontal axle having the said bent lever pivoted thereupon, a double-armed lever, a vertical shaft having the said double-armed lever pivoted thereupon, a traction rod pivoted on the one hand to the said bent lever and on the other hand to one arm of the said double-armed lever, the second arm of the lever being secured to the connecting means joining the said transverse bars to the said ribbon-raising and ribbon-winding means.

5. In a transportable typewriter, type levers, key levers, transverse bars disposed above the key levers, the said bars being adapted to be raised when one of the key levers is pressed, swinging lever arms secured to the said bars, means for raising the ribbon and for winding the ribbon, a traction rod pivoted to the said means, means for transmitting motion, adapted to transmit the motion of the said transverse bars to the said traction rod, a key lever for the accents, the said key lever being disposed outwardly of the said transverse bars, a double-armed lever, a vertical shaft having the said double-armed lever pivoted thereupon, means for connecting one end of the double-armed lever with the said accent-forming key lever, a finger mounted upon the other end of the double-armed lever, a stop-piece disposed upon the said traction rod, the said stop-piece being adapted to be impelled by the said finger when the accent-forming key is pressed, the said finger not being actuated when the said stop-piece is displayed by the movement produced by the said transverse bars.

6. In a transportable typewriter, a paper, carrying roller, a revoluble shaft parallel to

the said roller, a swinging support secured to the said shaft and carrying the said roller, a key lever for actuating the said shaft, a link pivoted to the said support, an axle mounted upon the said link, a holder adapted to receive the said axle, a double-armed lever disposed upon the said axle, a slide pivoted to one end of the said lever, a ribbon disposed upon the said slide, a fixed guide-piece for the said slide, a traction rod pivoted to the other end of the said double-armed lever, key levers, and means for transmitting the motion of the keys to the said traction rod.

7. In a transportable typewriter, ribbon spools, an actuating shaft of considerable length, arms adapted to swing loosely upon the said shaft, a trunnion disposed upon each of the said arms, the said trunnions being adapted to engage the said spools, key levers, means for transmitting to the said actuating shaft an intermittent movement of rotation each time that a key is pressed, and means for transmitting the intermittent rotation of the actuating shaft to the said spools.

8. In a transportable typewriter, key levers, a lever with spacing bar, a pivot axle whereon is caused to oscillate the said lever with spacing bar, a base plate, the said base plate being divided into two parts pivoted together whereof one part is fixed, the part situated above the key levers being of a folding nature and forming a supporting foot when folded down.

9. In a transportable typewriter, key levers, a lever with spacing bar, a pivot axle whereon is caused to oscillate the said lever with spacing bar, a base plate divided into two parts whereof one is fixed and the other folding, these two parts being pivoted together, the said pivot axle being disposed upon the said folding part.

10. In a portable typewriting machine, a box of prismatic shape comprising a base plate, a rear vertical wall pivoted to said plate and vertically movable above the same, and a forwardly situated element disposed opposite the keys constituting an extension for the said plate and pivoted thereto, and adapted to be brought below the plane of said plate so as to form a supporting foot.

In testimony that I claim the foregoing as my invention I have signed my name in presence of two subscribing witnesses.

HUBERT BURG.

Witnesses:

FRANK A. KELLER,

MARTHE STEINEBRUNNE.