June 1, 1926. 1,586,817

F. LJUNGSTRÖM

REGENERATIVE AIR PREHEATER

Filed August 3, 1922 3 Sheets-Sheet 1

FIG 1

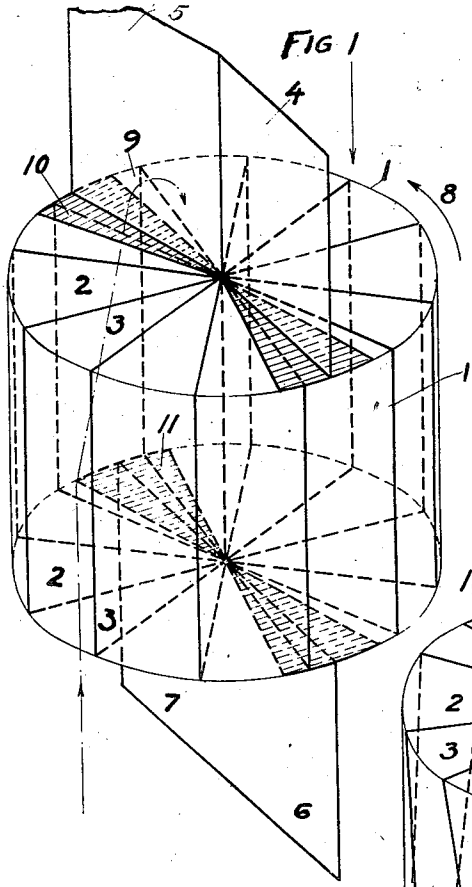

FIG. 6

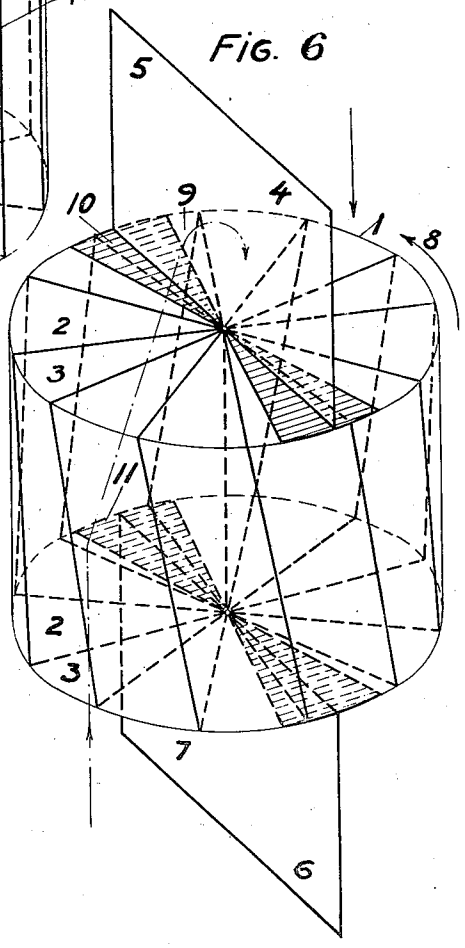

Inventor
F. Ljungström

By Marks & Clerk
Atty's

June 1, 1926. 1,586,817

F. LJUNGSTRÖM

REGENERATIVE AIR PREHEATER

Filed August 3, 1922 3 Sheets-Sheet 2

FIG. 2.

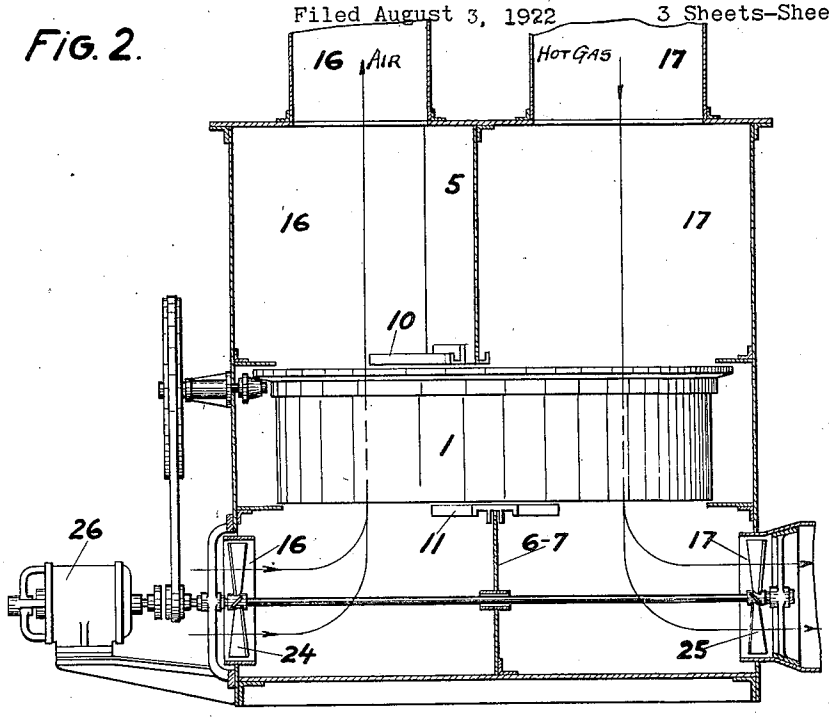

FIG. 3.

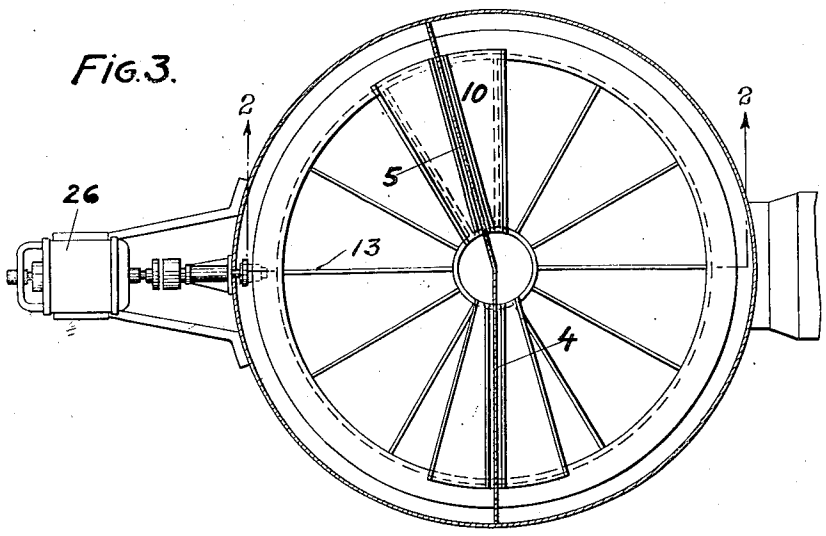

Inventor
F. Ljungstrom

By Marks & Clark
Atty's

June 1, 1926. 1,586,817

F. LJUNGSTRÖM

REGENERATIVE AIR PREHEATER

Filed August 3, 1922 3 Sheets-Sheet 3

Fig. 4.

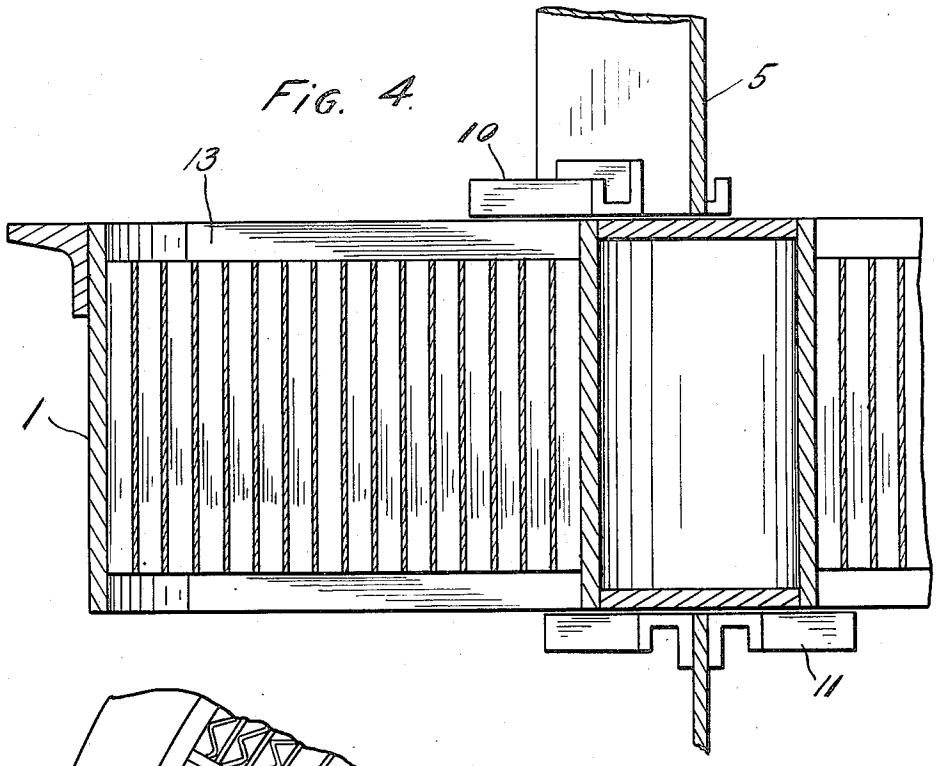

Fig. 5.

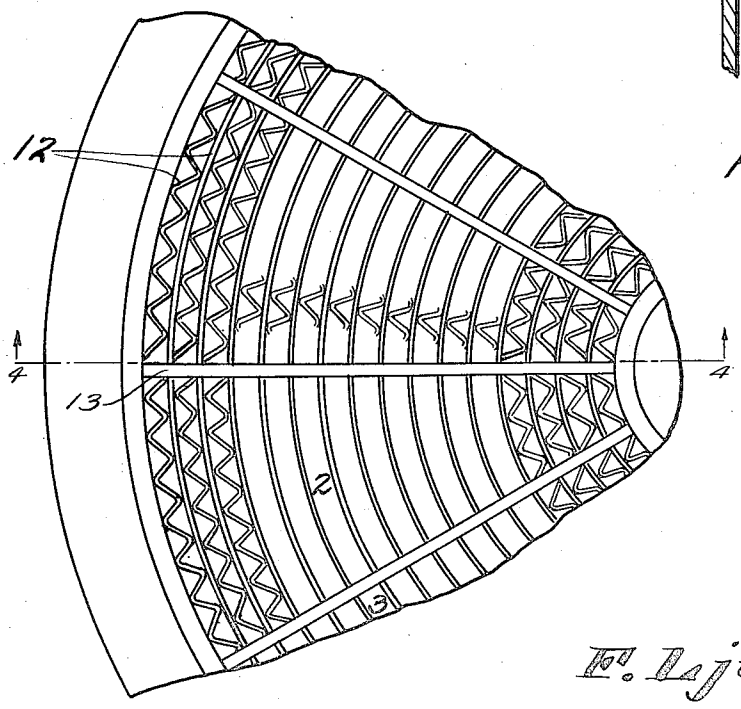

Inventor

F. Ljungström

By Marks & Clerk

Attorneys.

Patented June 1, 1926. 1,586,817

UNITED STATES PATENT OFFICE.

FREDRIK LJUNGSTRÖM, OF LIDINGO-BREVIK, SWEDEN, ASSIGNOR TO AKTIEBOLAGET LJUNGSTROMS ANGTURBIN, OF STOCKHOLM, SWEDEN, A CORPORATION.

REGENERATIVE AIR PREHEATER.

Application filed August 3, 1922, Serial No. 579,543, and in Sweden September 1, 1921.

This invention relates to regenerative air preheaters. In regenerative air preheaters in which a rotor containing a heat absorbing and heat rejecting material hereinafter called, for ease of description, "regenerative mass", rotates continuously or intermittently within two channels through which gases pass, one of which is warmer than the other, whereby heat is transferred from the warmer gas to the cooler one, the drawback is met with that there is a transfer of the gas accompanying the regenerative mass from one channel to the other. In my application Serial No. 460,600 for Letters Patent a regenerative air preheater is disclosed in which a tight joint at the partitions between the channels is obtained by the use of sector plates of such a size that they entirely cover one of the sections into which the regenerative mass is divided. As disclosed in that application such a section passes from one channel to the other the sector plates on either end of the regenerator rotor simultaneously cut off this section containing regenerative mass. When so cut off this section contains gas enclosed between the sector plates such gas being of the same nature as the gas present in the channel from which the said section is just about to move. This transfer of gas is particularly inconvenient when the regenerator is used as an air preheater for boilers or the like, in that flue gases are thereby transferred to the fresh air.

The present invention comprises means for preventing such a transfer of gas from one channel to the other and consists in arranging the walls of the rotor, the partitions between the channels for air and gas, and the sector plates in such position relative to each other that fresh air may pass during the rotation into the channel for flue gases through that section of the rotor which is just about to pass into the air channel. This is preferably attained by displacing the sector plates with respect to one another, and a sufficient amount of scavenging air is obtained by maintaining constant the relation between the speed of the driving means which rotates the air preheater and that of the driving means for the fans which force the gases through the air preheater and by maintaining a higher pressure in the air channel than in the gas channel.

The invention is illustrated in the accompanying drawings in which Fig. 1 shows diagrammatically one embodiment which is represented in Figs. 2, 3, 4 and 5 as applied in actual practice. Fig. 2′ being a longitudinal section taken on line 2—2, Fig. 3 with the rotor and other parts in elevation, Fig. 3 a plan view thereof, Fig. 4, a cross-section of part of the rotor taken on line 4—4 of Fig. 5 and Fig. 5, a plan view of part of the rotor. Fig. 6 shows diagrammatically another embodiment.

In the embodiment illustrated in Figs. 1–5 inclusive, reference character 1 designates the rotor of the regenerator. The rotor is divided into compartments such as 2, 3 and 9 by means of walls 13, which are preferably situated radially of the rotor. Regenerative mass 12 is placed in the said compartments. By way of example, I have shown, as one form of regenerative mass capable of use with my invention, alternately disposed substantially straight and corrugated plates, although it is to be understood that any type of regenerative material may be used. The regenerative material is described and claimed in my co-pending application Serial No. 460,600 above referred to. As shown in Fig. 4, walls 13 extend the full height of the rotor but the plates of the regenerative mass 12 do not extend the full height but are so arranged that a space is left at the top and bottom extending across the whole of each compartment, the purpose of which will be apparent as the description proceeds. The rotor rotates in the direction of arrow 8.

Partitions 4, 5, 6 and 7 serve to separate the channels 16 and 17 for air and flue gases respectively. In the embodiment shown in the air passes upwardly on the left hand side and the flue gases downwardly on the right hand side, as indicated by arrows. Attached to the partitions are sector plates 10 and 11. These sector plates are indicated by shaded surfaces in Fig. 1. Each sector plate is of such a size that it covers one compartment of the rotor and fits snugly to the edge of the rotor. In previous constructions, these sector plates were placed directly opposite each other with respect to the rotor. By so doing, at certain times in the operation of the regenerator, a whole compartment would be completely blocked off giving the disadvantage, above pointed out, that a certain amount of flue gases would be car-

ried over in such a blocked off compartment from the flue gas channel to the air channel.

In the embodiment of present invention shown in Figs. 1–5, these sector plates are displaced with respect to each other, on that end of the regenerator rotor where the rotor travels out of the flue gas channel 17 and into the air channel 16, the upper sector 10, with the flow of gases as shown, being in advance of the lower sector plate 11, as regards the direction of rotation of the rotor. That is, the lower open end of any and each sector-shaped compartment is first closed by the lower sector plate 11 and then after further travel of the compartment in the direction of the arrow, the upper open end of the compartment is closed by the upper sector plate 10. By this means, in operation, there will be a time when each compartment is in communication with the flue gas channel on the one hand and the air channel on the other. For example, as shown in Fig. 1, sector plate 10 has not yet closed off the upper opening of compartment 9, whereas the lower opening of compartment 9 has passed beyond that point at which it is entirely cut off by sector plate 11 and is in communication with the air channel. Now at this time, by maintaining a somewhat higher pressure in the air channel than in the flue gas channel, a small amount of air can pass from the air channel, through compartment 9 and into the flue gas channel, carrying the flue gases in the compartment back into the flue gas channel. This is in part effected by the arrangement of the regenerative material in the rotor, which is shorter than the outer cylinder and the walls of the rotor so that there is a space across the whole top and the whole bottom of the compartment, thus permitting air to pass across the whole bottom of the compartment, up through all the passages of the regenerative mass, across the top of the compartment and out into the flue gas channel.

24 and 25 designate fans which are driven together with the rotor 1, preferably by a common driving means such as electric motor 26. The fans are directly connected to the motor shaft and the rotor is driven from the shaft by means of a belt or chain, or in any other way. If the rotor and the fans are driven from separate motors, the speeds of the latter must be controllable in such a manner that the proper relation between the speeds of the driving means is always maintained. The regenerative mass on passing from the flue gases channel to the air channel has its highest temperature and evidently will be somewhat cooled by the scavenging air. However, as this air will subsequently pass through another section of the rotor 1 in the direction of the flue gases, this heat will also be utilized in the same manner as the heat from the flue gases. In order that no more than the requisite quantity of air shall pass through the section to be scavenged, in that an unnecessary vigorous cooling of this section would otherwise take place, care should be taken that no more than a certain quantity of air, depending on the speed of the rotor, will be allowed to pass through the same, and such definite quantity of air is obtained by the driving means of the fans which force air or gases through the rotor and the driving means of the rotor having constant speeds relatively to each other, in such a manner that, for example, on the speed of the rotor being doubled, the speed of the fans will likewise be doubled. By the employment of the fans it is moreover possible to regulate the pressures so that gas will never pass into the air channel.

Fig. 6 shows a modification in which the walls 4 and 5 and 6 and 7 which separate the channels for air and flue gases are all situated in one plane. The scavenging effect obtained in Fig. 1 is here attained by the walls between the rotor sections having such oblique positions as to allow air to pass in the direction of the broken line arrow through each rotor section to the flue gas channel while the rotor is rotating.

With the arrangements described an increased efficiency is obtained in the regenerator and in the boiler or the like with which it is connected, in that the air is not contaminated in the regenerator.

It should be evident that a combination of the structures of Figs. 1 and 6 is conceivable, the rotor being then devised according to Fig. 1 but the partitions 4 to 7 straight as in Fig. 6. This is simply attained by the sector plates 10 and 11 being displaced relatively to one another the same as in Fig. 1. Such an embodiment is obviously comprised in the principle of the invention above set forth it is only considered that the sector plates form part of the partitions. Various other modifications are obvious within the scope of the invention.

What I claim as new and desire to secure by Letters Patent of the United States is:—

1. A regenerative heater comprising a first channel for a fluid, a second channel for a fluid, a regenerative material, means for effecting a relative motion between said channels and said material and means to pass fluid from the first channel through the part of the material which is about to enter said channel and into the second channel.

2. A regenerative heater comprising a first channel for a fluid, a second channel for a fluid, a regenerative rotor adapted to move within each of said channels and means to pass fluid from the first channel

through the part of the rotor which is about to enter the first channel and into the second channel.

3. A regenerative heater comprising a plurality of channels for fluids, a regenerative rotor adapted to move within each of said channels and means to pass fluid from one channel to another through the rotor in the opposite direction to the rotation of the rotor.

4. A regenerative heater comprising a plurality of channels for fluid, partitions separating said channels, a rotor adapted to move in each of said channels, walls in said rotor dividing the rotor into compartments, regenerative material in said compartments, said compartments being open at the ends of the rotor, sector plates on the partitions at opposite ends of the rotor adapted to cover said openings, said sector plates being so disposed with respect to said walls that when a compartment passes from one channel to another there is simultaneously a communication between the compartment and each of such channels.

5. A regenerative heater comprising a plurality of channels for fluid, a rotor adapted to move within each of said channels, walls dividing said rotor into compartments, regenerative material in said compartments, openings in said compartments, a sector plate adapted to close one of said openings in a given position of the rotor with the edge of the sector plate in line with one of said walls, a second sector plate at the opposite end of said compartment so arranged in the said given position that its corresponding edge is out of alinement with said wall.

6. A regenerative heating device comprising a casing, partitions in said casing forming a plurality of channels for fluid, a rotor in said casing, walls in said rotor dividing the same into compartments, regenerative material in said compartments, means to move said rotor through said channels, and means whereby each compartment when it passes from one channel into another is simultaneously in communication with both channels.

In testimony whereof I affix my signature.

FREDRIK LJUNGSTRÖM.